Georgia
Rules and Regulations for
RADIOACTIVE MATERIALS

Chapter 391-3-17

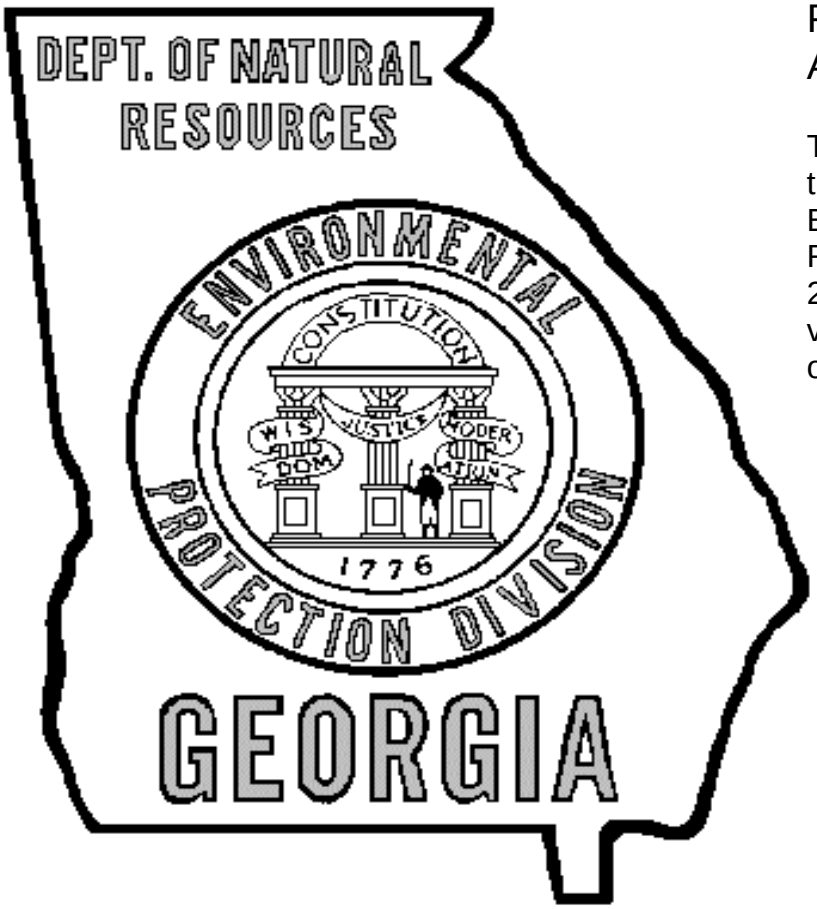

Publication Date
August 13, 2015

This Publication reflects the rules adopted by the Board of Natural Resources on January 13, 2015. To view the official version, visit the Secretary of State website.

[Note: This document is not intended to replace the official Secretary of state's version. Its sole purpose is expediency in copying and distribution.]

GEORGIA DEPARTMENT OF NATURAL RESOURCES

The Department of Natural Resources is an equal opportunity employer and offers all persons the opportunity to compete and participate in each area of DNR employment regardless of race, color, religion, sex, national origin, age, handicap, or other non-merit factors.

Georgia Department of Natural Resources
4224 International Parkway, Suite 120, Atlanta, Georgia 30354
Environmental Protection Division
Judson H. Turner, Director
(404) 363-7000

GEORGIA EMERGENCY RADIOLOGICAL ASSISTANCE TELEPHONE NUMBERS

- To Report a Radiological Emergency or Request Emergency Radiological Assistance, Call the Following Number **During Business Hours:**

  Georgia Environmental Protection Division
  Radioactive Materials Program and Environmental Radiation Program

  (404) 362-2675

- For **24-Hour** Radiological Assistance, Call:

  Georgia Emergency Management Agency
  Emergency Operations Center

  (404) 656-4863

- Outside the Atlanta Toll-Free Calling Area (In Georgia Only), Call:

  Georgia Emergency Management Agency
  Emergency Operations Center

  1-800-241-4113

SUBJECT GUIDE

391-3-17-.01	General Provisions. Amended	391-3-17-.07	Notices, Instructions, and Reports To Workers; Inspections. Amended.
391-3-17-.02	Licensing Of Radioactive Material. Amended	391-3-17-.08	Regulation and Licensing of Naturally-Occurring Radioactive Materials (Norm).
391-3-17-.03	Standards for Protection Against Radiation. Amended	391-3-17-.09	Licensing and Radiation Safety Requirements for Irradiators.
391-3-17-.04	Special Radiation Safety Requirements for Industrial Radiographic Operations. Amended.	391-3-17-.10	Administration. Amended
391-3-17-.05	Use of Radionuclides in the Healing Arts. Amended	391-3-17-.11	Enforcement.
391-3-17-.06	Transportation of Radioactive Material.	391-3-17-.12	Licenses and Radiation Safety Requirements for Well Logging

TABLE OF CONTENTS

391-3-17-.01 General Provisions. Amended 1

(1) **Scope.** 1
(2) **Definitions.** 1
(3) **Exemptions from the Regulatory Requirements.** 12
(4) **Records.** 13
(5) **Inspections.** 13
(6) **Tests.** 14
(7) **Additional Requirements.** 14
(8) **Violations.** 14
(9) **Impounding.** 15
(10) **Severability.** 15
(11) **Units of Exposure and Dose.** 15
(12) **Units of Radioactivity.** 17
(13) **Communications.** 18

391-3-17-.02 Licensing Of Radioactive Material. Amended 19

(1) **Purpose and Scope.** 19
(2) **Exemptions/Source Material.** 19
(3) **Exemptions/Radioactive Material Other Than Source Material.** 21
(4) **Types of Licenses.** 27
(5) **General Licenses - Source Material.** 27
(6) **General Licenses - Radioactive Materials Other Than Source Material.** 29
(7) **Filing Application for Specific Licenses.** 38
(8) **General Requirements for the Issuance of Specific Licenses.** 42
(9) **Special Requirements for Issuance of Certain Specific Licenses for Radioactive Material.** 49
(10) **Special Requirements for Specific Licenses of Broad Scope.** 52
(11) **Special Requirements for a Specific License to Manufacture, Assemble, Repair, or Distribute Commodities, Products, or Devices which Contain Radioactive Material.** 55
(12) **Issuance of Specific Licenses.** 69
(13) **Specific Terms and Conditions of Licenses.** 69
(14) **Expiration of Licenses.** 71
(15) **Renewal of Licenses.** 71

(16) **Amendment of Licenses at Request of Licensee.** ... 72
(17) **Department Action on Applications to Renew or Amend.** ... 72
(18) **Modification, Revocation, and Termination of Licenses.** ... 72
(19) **Transfer of Material.** ... 73
(20) **Reciprocity.** ... 75
(21) **Schedules.** ... 76

391-3-17-.03 Standards for Protection Against Radiation. Amended ... 106

(1) **General Provisions** ... 106
(2) **Definitions** ... 106
(3) **Implementation** ... 112
(4) **Radiation Protection Programs** ... 112
(5) **Occupational Dose Limits and Dose Limits for Individual Members of the Public** ... 113
(6) **Testing for Leakage or Contamination of Sealed Sources** ... 120
(7) **Radiological Requirements for License Termination** ... 122
(8) **Surveys and Monitoring** ... 123
(9) **Control Of Exposure From External Sources In Restricted Areas** ... 125
(10) **Respiratory Protection and Controls to Restrict Internal Exposure in Restricted Areas** ... 126
(11) **Storage and Control of Licensed Material** ... 129
(12) **Precautionary Procedures** ... 129
(13) **Waste Disposal** ... 133
(14) **Records** ... 146
(15) **Reports** ... 150
(16) **Exemptions and Additional Requirements** ... 159

391-3-17-.04 Special Radiation Safety Requirements for Industrial Radiographic Operations. Amended. ... 161

(1) **Purpose.** ... 161
(2) **Scope.** ... 161
(3) **Definitions.** ... 161
(4) **Licensing Requirements for Industrial Radiography Operations.** ... 164
(5) **Performance Requirements for Radiography Equipment.** ... 166
(6) **Equipment Control. Limits on External Radiation Levels From Storage Containers and Source Changers.** ... 167
(7) **Locking and Storage of Radiographic Devices, Storage Containers, and Source Changers.** ... 167
(8) **Radiation Survey Instruments.** ... 169
(9) **Leak Testing and Replacement of Sealed Sources.** ... 169
(10) **Quarterly Inventory.** ... 170
(11) **Inspection and Maintenance of Radiographic Exposure Devices, Transport and Storage Containers, Associated Equipment, Source Changers, and Survey Instruments.** ... 170
(12) **Permanent Radiographic Installations.** ... 171
(13) **Labeling, Storage, and Transportation.** ... 171
(14) **Conducting Industrial Radiographic Operations.** ... 172
(15) **Radiation Safety Officer.** ... 172
(16) **Training.** ... 174
(17) **Operating and Emergency Procedures.** ... 177
(18) **Supervision of Radiographer's Assistants.** ... 177
(19) **Personnel Monitoring Control.** ... 178
(20) **Radiation Surveys.** ... 179
(21) **Surveillance.** ... 179
(22) **Posting.** ... 179

(23) **Records for Industrial Radiography.** ... 179
(24) **Records of Receipt and Transfer of Sources of Radiation.** ... 179
(25) **Records of Radiation Survey Instruments.** ... 180
(26) **Records of Leak Testing of Sealed Sources and Devices Containing DU.** ... 180
(27) **Records of Quarterly Inventory.** ... 180
(28) **Utilization Logs.** ... 180
(29) **Records of Inspection and Maintenance of Radiographic Exposure Devices, Transport and Storage Containers, Associated Equipment, Source Changers, and Survey Instruments.** ... 180
(30) **Records of Alarm System and Entrance Control Checks at Permanent Radiographic Installations.** ... 181
(31) **Records Of Training and Certification.** ... 181
(32) **Copies of Operating and Emergency Procedures.** ... 181
(33) **Records of Personnel Monitoring.** ... 181
(34) **Records of Radiation Surveys.** ... 181
(35) **Form of Records.** ... 181
(36) **Location Of Documents and Records.** ... 182
(37) **Notifications.** ... 183
(38) **Application and Examinations.** ... 183
(39) **Certification Identification (ID) Card.** ... 184
(40) **Reciprocity.** ... 185
(41) **Specific Requirements for Radiographic Personnel Performing Industrial Radiography.** ... 186

391-3-17-.05 Use of Radionuclides in the Healing Arts. Amended ... 190

(1) **Purpose and Scope.** ... 190
(2) **Definitions.** ... 190
(3) **Maintenance of Records.** ... 194
(4) **Provisions for Research Involving Human Subjects.** ... 195
(5) **U.S. Food and Drug Administration, Federal, and State Requirements.** ... 195
(6) **Implementation.** ... 195
(7) **License Required.** ... 195
(8) **Application for License, Amendment, or Renewal.** ... 196
(9) **Mobile Medical Service Administrative Requirements.** ... 196
(10) **License Amendments.** ... 198
(11) **Notifications.** ... 198
(12) **Exemptions Regarding Type A Specific Licenses of Broad Scope.** ... 199
(13) **License Issuance.** ... 199
(14) **Specific Exemptions.** ... 200
(15) **Authority and Responsibilities for the Radiation Protection Program.** ... 200
(16) **Radiation Protection Program Changes.** ... 201
(17) **Duties of Authorized User and Authorized Medical Physicist,** ... 201
(18) **Supervision.** ... 202
(19) **Written Directives.** ... 202
(20) **Procedures for Administrations Requiring a Written Directive.** ... 203
(21) **Suppliers for Sealed Sources or Devices for Medical Use.** ... 204
(22) **Training for Radiation Safety Officer.** ... 204
(23) **Training for Authorized Medical Physicist.** ... 206
(24) **Training for an Authorized Nuclear Pharmacist.** ... 207
(25) **Training and Technical Requirements for Nuclear Medicine Technologists and Radiation Therapists.** ... 209

(26) **Provisions for Experienced Radiation Safety Officer, Teletherapy or Medical Physicist, Authorized Medical Physicist, Authorized User, Nuclear Pharmacist, and Authorized Nuclear Pharmacist.** ... 211
(27) **Recentness of Training.** ... 213
(28) **Quality Control of Diagnostic Equipment.** ... 213
(29) **Possession, Use, and Testing of Instruments to Measure the Activity of Unsealed Radioactive Materials.** ... 213
(30) **Calibration of Survey Instruments.** ... 213
(31) **Determination of Dosages of Radioactive Material for Medical Use.** ... 214
(32) **Authorization for Calibration, Transmission and Reference Sources.** ... 214
(33) **Requirements for Possession of Sealed Sources and Brachytherapy Sources.** ... 215
(34) **Labels.** ... 215
(35) **Vial Shields.** ... 215
(36) **Surveys for Ambient Radiation Dose Rate and Contamination.** ... 215
(37) **Release of Individuals Containing Radioactive Drugs or Implants.** ... 216
(38) **Mobile Medical Service Technical Requirements.** ... 217
(39) **Storage and Control of Volatiles and Gases.** ... 218
(40) **Decay-in-Storage.** ... 218
(41) **Use of Unsealed Radioactive Material for Uptake, Dilution, or Excretion Studies for which a Written Directive is Not Required.** ... 218
(42) **Possession of Survey Instrument.** ... 219
(43) **Training for Uptake, Dilution, and Excretion Studies.** ... 219
(44) **Use of Unsealed Radioactive Material for Imaging and Localization Studies for Which a Written Directive is Not Required.** ... 220
(45) **Permissible molybdenum-99, strontium-82, and strontium-85 concentrations.** ... 221
(46) **Possession of Survey Instruments.** ... 221
(47) **Training for Imaging and Localization Studies.** ... 221
(48) **Use of Unsealed Radioactive Material for Which a Written Directive is Required.** ... 223
(49) **Safety Instruction.** ... 223
(50) **Safety Precautions.** ... 224
(51) **Possession of Survey Instruments.** ... 224
(52) **Training for Use of Unsealed Radioactive Material for Which a Written Directive is Required.** ... 224
(53) **Training for the Oral Administration of Sodium Iodide I-131 in Quantities Less than or Equal to 1.22 Gigabecquerel (33 millicurie) for which a Written Directive is Required.** ... 226
(54) **Training for the Oral Administration of Sodium Iodide I-131 in Quantities Greater than 1.22 Gigabecquerel (33 millicurie) for which a Written Directive is Required.** ... 228
(55) **Use of Sealed Sources for Manual Brachytherapy.** ... 230
(56) **Surveys After Source Implant and Removal.** ... 230
(57) **Brachytherapy Sources Inventory.** ... 231
(58) **Safety Instruction.** ... 231
(59) **Safety Precautions for Patients or Human Research Subjects Receiving Brachytherapy.** ... 231
(60) **Calibration Measurements of Brachytherapy Sealed Sources.** ... 232
(61) **Therapy-related Computer Systems.** ... 232
(62) **Possession of Survey Instruments.** ... 233
(63) **Training for Use of Manual Brachytherapy Sources.** ... 233
(64) **Training for Ophthalmic Use of Strontium-90.** ... 234
(65) **Use of Sealed Sources for Diagnosis.** ... 235
(66) **Training for Use of Sealed Sources for Diagnosis.** ... 235
(67) **Use of Sealed Sources in a Remote Afterloader Unit, Teletherapy Unit, or Gamma Stereotactic Radiosurgery Unit.** ... 236

(68) **Surveys of Patients and Human Research Subjects Treated with a Remote Afterloader Unit.** 236
(69) **Installation, Maintenance, Adjustment, and Repair.** 236
(70) **Safety Procedures and Instructions for Remote Afterloader Units, Teletherapy Units, and Gamma Stereotactic Radiosurgery Units.** 237
(71) **Safety Precautions for Remote Afterloader Units, Teletherapy Units, and Gamma Stereotactic Radiosurgery Units.** 238
(72) **Dosimetry Equipment.** 239
(73) **Full Calibration Measurements on Teletherapy Units.** 240
(74) **Full Calibration Measurements on Remote Afterloader Units.** 241
(75) **Full Calibration Measurements on Gamma Stereotactic Radiosurgery Units.** 242
(76) **Periodic Spot-Checks for Teletherapy Units.** 243
(77) **Periodic Spot-Checks for Remote Afterloader Units.** 244
(78) **Periodic Spot-Checks for Gamma Stereotactic Radiosurgery Units.** 245
(79) **Additional Technical Requirements for Mobile Remote Afterloader Units.** 247
(80) **Radiation Surveys.** 248
(81) **Five-Year Inspection for Teletherapy and Gamma Stereotactic Radiosurgery Units.** 248
(82) **Therapy-Related Computer Systems.** 248
(83) **Possession of Survey Instruments.** 249
(84) **Training for Use of Remote Afterloader Units, Teletherapy Units, and Gamma Stereotactic Radiosurgery Units.** 249
(85) **Other Medical Uses of Radioactive Material or Radiation From Radioactive Material.** 250
(86) **Records of Authority and Responsibilities for Radiation Protection Programs.** 251
(87) **Records of Radiation Protection Program Safety Changes.** 251
(88) **Records of Written Directives.** 251
(89) **Records of Misadministrations.** 251
(90) **Record of a Dose to an Embryo/Fetus or a Nursing Child.** 251
(91) **Records of Calibrations of Instruments Used to Measure the Activity of Unsealed Radioactive Material.** 252
(92) **Records of Survey Instrument Calibrations.** 252
(93) **Records of Dosages of Unsealed Radioactive Material for Medical Use.** 252
(94) **Records of Possession of Sealed Sources and Brachytherapy Sources.** 252
(95) **Records of Surveys for Ambient Radiation Exposure Rate.** 252
(96) **Records of the Release of Individuals Containing Radioactive Drugs or Implants Containing Radioactive Material.** 252
(97) **Records of Administrative and Technical Requirements that Apply to the Provision of Mobile Services.** 252
(98) **Records of Decay-in-Storage.** 253
(99) **Records of Radionuclide Purity.** 253
(100) **Records of Training.** 253
(101) **Records of Safety Instruction and Training.** 253
(102) **Records of Radiation Surveys of Patients and Human Research Subjects.** 253
(103) **Records of Brachytherapy Source Inventory.** 253
(104) **Records of Calibration Measurements on Brachytherapy Sources.** 254
(105) **Records of Decay of Strontium-90 Sources for Ophthalmic Treatments.** 254
(106) **Records of Installation, Maintenance, Adjustment, and Repair.** 254
(107) **Records of Dosimetry Equipment.** 254
(108) **Records of Teletherapy, Remote Afterloader, and Gamma Stereotactic Radiosurgery Full Calibrations.** 255
(109) **Records of Periodic Spot-Checks for Teletherapy Units.** 255
(110) **Records of Periodic Spot-Checks for Remote Afterloader Units.** 256

(111) **Records of Periodic Spot-Checks for Gamma Stereotactic Radiosurgery Units.** 256
(112) **Records of Additional Technical Requirements for Mobile Remote Afterloader Units.** 257
(113) **Records of Surveys of Therapeutic Treatment Units.** 257
(114) **Records of Five-Year Inspection for Teletherapy and Gamma Stereotactic Surgery Units.** .. 257
(115) **Reports and Notifications of Misadministrations.** 258
(116) **Report and Notification of a Dose to an Embryo/Fetus or a Nursing Child.** 260
(117) **Reports of Leaking Sources.** 261
(118) **Reports of Patient Departure Prior to Authorized Release.** 261
(119) **Notification of Deceased Patients or Human Research Subjects Containing Radioactive Material.** 262

391-3-17-.06 Transportation of Radioactive Material. 263

(1) **General.** 263
(2) **Requirement for License.** 263
(3) **Definitions.** 263
(4) **Exemptions.** 269
(5) **Transportation of Licensed Material.** 270
(6) **General Licenses for Carriers.** 271
(7) **General License: NRC-Approved Packages.** 272
(8) **General License: Previously Approved Type B Packages.** 272
(9) **General License: DOT Specification Container.** 273
(10) **General License: Use of Foreign-Approved Package.** 273
(11) **General License: Fissile Material, Limited Quantity per Package.** 273
(12) **General License: Plutonium-Beryllium Special Form Material.** 276
(13) **Assumptions as to Unknown Properties of Fissile Material.** 277
(14) **External Radiation Standards For All Packages.** 277
(15) **Preliminary Determinations.** 278
(16) **Routine Determinations.** 278
(17) **Air Transport of Plutonium.** 280
(18) **Opening instructions.** 281
(19) **Shipment Records.** 281
(20) **Reports.** 281
(21) **Advance Notification of Transport of Nuclear Waste.** 281
(22) **Quality Assurance Requirements.** 283
(23) **Determination of A1 and A2.** 284

391-3-17-.07 Notices, Instructions, and Reports To Workers; Inspections. Amended. 311

(1) **Purpose and Scope.** 311
(2) **Posting of Notices to Workers.** 311
(3) **Instructions to Workers.** 311
(4) **Notifications and Reports to Individuals.** 312
(5) **Presence of Representatives of Licensees and Workers During Inspection.** 313
(6) **Consultation with Workers During Inspections.** 314
(7) **Requests by Workers for Inspections** 314
(8) **Inspections Not Warranted; Informal Review** 315

391-3-17-.08 Regulation and Licensing of Naturally-Occurring Radioactive Materials (Norm)..... 316

(1) **Purpose.** 316
(2) **Scope.** 316
(3) **Definitions.** 316
(4) **Exemptions.** 317

(5) **Radiation Survey Instruments.** 318
(6) **Effective Date.** 319
(7) **General License.** 319
(8) **Protection of Workers and the General Population During Operations.** 320
(9) **Disposal and Transfer of Waste for Disposal.** 320
(10) **Specific Licenses.** 321
(11) **Filing Application for Specific Licenses.** 321
(12) **Requirements for the Issuance of Specific Licenses.** 321
(13) **Safety Criteria for Specific Licenses.** 324
(14) **Issuance of Specific Licenses.** 325
(15) **Conditions of Specific Licenses Issued Under (12).** 325
(16) **Expiration and Termination of Specific Licenses.** 326
(17) **Renewal of Specific Licenses.** 327
(18) **Amendment of Specific Licenses at Request of Licensee.** 328
(19) **Department Action on Applications to Renew and Amend Specific Licenses.** 328
(20) **Reciprocal Recognition of Licenses.** 328
(21) **Financial Surety Arrangements for Specific Licenses.** 328
(22) **Modification and Revocation of Licenses.** 329

391-3-17-.09 Licensing and Radiation Safety Requirements for Irradiators. 332

(1) **Purpose and scope.** 332
(2) **Definitions.** 332
(3) **Specific Licensing Requirements.** 333
(4) **Design and Performance Requirements for Irradiators.** 336
(5) **Operation of Irradiators.** 343
(6) **Records.** 350

391-3-17-.10 Administration. Amended 353

(1) Scope. 353
(2) Administration. 353
(3) Penalties. 356

391-3-17-.11 Enforcement. 359

391-3-17-.12 Licenses and Radiation Safety Requirements for Well Logging 360

NOTICE TO EMPLOYEES 362

391-3-17-.01 General Provisions. Amended

(1) **Scope.** Except as otherwise specifically provided, this Chapter, 391-3-17, applies to all persons who manufacture, produce, receive, possess, use, transfer, own, or acquire any source of radiation; provided, however, that nothing in this Chapter shall apply to any person to the extent such person is subject to regulation by the U.S. Nuclear Regulatory Commission.[1] Nothing in Rule 391-3-17-.03 of this Chapter shall be interpreted as limiting the intentional exposure of patients to radiation for the purpose of diagnosis or therapy.

(2) **Definitions.** As used in this Chapter, these terms have the definitions set forth below. Additional definitions used only in a certain Rule will be found in that Rule.

(a) "A_1" means the maximum activity of special form radioactive material permitted in a Type A package. "A_2" means the maximum activity of radioactive material, other than special form, LSA and SCO material, permitted in a Type A package. These values are either listed in the "Table of A_1 and A_2 Values for Radionuclides" of 49 CFR 173.435 or may be derived in accordance with the procedure prescribed in 49 CFR 173.433-173.435.

(b) "Absorbed dose" means the energy imparted by ionizing radiation per unit mass of irradiated material. The units of absorbed dose are the rad and the Gray (Gy).

(c) "Accelerator-produced radioactive material" means any material made radioactive by a particle accelerator.

(d) "Act" means Chapter 13 of the Official Code of Georgia, Annotated, entitled "Radiation Control" as amended.

(e) "Activity" means the rate of disintegration or transformation or decay of radioactive material. The units of activity are the Curie (Ci) and the Becquerel (Bq).

(f) "Adult" means an individual 18 or more years of age.

(g) "Agreement State" means any State with which the U.S. Nuclear Regulatory Commission or the U.S. Atomic Energy Commission has entered into an effective agreement under subsection 274b. of the Atomic Energy Act of 1954, as amended (73 Stat. 689).

(h) "Airborne radioactive material" means any radioactive material dispersed in the air in the form of dusts, fumes, particulates, mists, vapors, or gases.

(i) "Airborne radioactivity area" means a room, enclosure or operating area in which airborne radioactive materials, composed wholly or partly of licensed materials, exist in concentrations;

1. In excess of the derived air concentrations (DACs) specified in Appendix B, to 10 CFR 20.1001-20.2401, or

[1]Attention is directed to the fact that regulation by the State of source material, byproduct material, and special nuclear material in quantities not sufficient to form a critical mass is subject to the provisions of the agreement between the State of Georgia and the U.S. Nuclear Regulatory Commission and to 10 CFR Part 150 of the Commission's regulations.

2. To such a degree that an individual present in the area without respiratory protective equipment could exceed, during the hours an individual is present in a week, an intake of 0.6 percent of the annual limit on intake (ALI) or 12 DAC-hours.

(j) "Annually" means once every 12 calendar months or no later than the last day of the same calendar month of the following year.

(k) "As low as is reasonably achievable" (ALARA) means making every reasonable effort to maintain exposures to radiation as far below the dose limits in this Chapter as is practical, consistent with the purpose for which the licensed activity is undertaken, taking into account the state of technology, the economics of improvements in relation to the state of technology, the economics of improvements in relation to benefits to the public health and safety, and other societal and socioeconomic considerations, and in relation to utilization of nuclear energy and licensed or registered sources of radiation in the public interest.

(l) "Background radiation" means radiation from cosmic sources; naturally occurring radioactive materials, including radon, except as a decay product of source or special nuclear material, and including global fallout as it exists in the environment from the testing of nuclear explosive devices or from past nuclear accidents such as Chernobyl that contribute to background radiation and are not under the control of the licensee. "Background radiation" does not include sources of radiation from radioactive materials regulated by the Department.

(m) "Becquerel" (Bq) means the SI unit of activity. One Becquerel is equal to one disintegration or transformation per second.

(n) "Bioassay" means the determination of kinds, quantities or concentrations, and, in some cases, the locations of radioactive material in the human body, whether by direct measurement, in vivo counting, or by analysis and evaluation of materials excreted or removed from the human body. For purposes of this Chapter, "radiobioassay" is an equivalent term.

(o) "Byproduct material" means:

1. Any radioactive material, except special nuclear material, yielded in or made radioactive by exposure to the radiation incident to the process of producing or utilizing special nuclear material;

2. The tailings or wastes produced by the extraction or concentration of uranium or thorium from ore processed primarily for its source material content, including discrete surface wastes resulting from uranium solution extraction processes. Underground ore bodies depleted by these solution extraction operations do not constitute "byproduct material" within this definition.

3. (i) Any discrete source of radium-226 that is produced, extracted, or converted after extraction, before, on, or after August 8, 2005, for use for a commercial, medical, or research activity; or

(ii) Any material that:

(I) Has been made radioactive by use of a particle accelerator; and

(II) Is produced, extracted, or converted after extraction, before, on, or after August 8, 2005, for use for a commercial, medical, or research activity; and

4. Any discrete source of naturally occurring radioactive material, other than source material, that:

(i) The Nuclear Regulatory Commission, in consultation with the Administrator of the Environmental Protection Agency, the Secretary of Energy, the Secretary of Homeland Security, and the head of any other appropriate Federal agency, determines would pose a threat similar to the threat posed by a discrete source of radium-226 to the public health and safety or the common defense and security; and

(ii) Before, on, or after August 8, 2005, is extracted or converted after extraction for use in a commercial, medical, or research activity.

(p) "Calibration" means the determination of:

1. The response or reading of an instrument relative to a series of known radiation values over the range of the instrument, or

2. The strength of a source of radiation relative to a standard.

(q) "CFR" means the Code of Federal Regulations.

(r) "Collective dose" means the sum of the individual doses received in a given period of time by a specified population from exposure to a specified source of radiation.

(s) “Committed dose” means the radiation dose that will accumulate over time as a result of retention in the body of radioactive material. Committed dose is a generic term for internal dose and must be calculated by summing the projected dose over the 50 years after intake for all irradiated organs or tissues multiplying the doses to individual organs and tissues by applicable tissue weighting factors.

(t) "Committed dose equivalent" ($H_{T,50}$) means the dose equivalent to organs or tissues of reference (T) that will be received from an intake of radioactive material by an individual during the 50-year period following the intake.

(u) "Committed effective dose equivalent" ($H_{E,50}$) is the sum of the products of the weighting factors applicable to each of the body organs or tissues that are irradiated and the committed dose equivalent to each of these organs or tissues ($H_{E,50} = \Sigma\ w_{T,}H_{T,50}$).

(v) “Consortium” means an association of medical use licensees and a PET radionuclide production facility in the same geographical area that jointly own or share in the operation and maintenance cost of the PET radionuclide production facility that produces PET radionuclides for use in producing radioactive drugs within the consortium for noncommercial distributions among its associated members for medical use. The PET radionuclide production facility within the consortium must be located at an educational institution or a Federal facility or a medical facility.

(w) "Curie" means a unit of quantity of radioactivity. One Curie (Ci) is that quantity of radioactive material that decays at the rate of 3.7×10^{10} transformations per second (tps).

(x) "Daily" means once every calendar day worked.

(y) "Deep dose equivalent" (H_d), which applies to external whole body exposure, means the dose equivalent at a tissue depth of one centimeter (1,000 mg/cm^2).

(z) "Department" means the Department of Natural Resources of the State of Georgia.

(aa) "Depleted uranium" means the source material uranium in which the isotope uranium-235 is less than 0.711 weight percent of the total uranium present. Depleted uranium does not include special nuclear material.

(bb) "Derived air concentration" (DAC) means the concentration of a given radionuclide in air which, if breathed by the reference man for a working year of 2,000 hours under conditions of light work (inhalation rate 1.2 cubic meters of air per hour), results in an intake of one ALI. (Annual Limit on Intake defined in Rule .03 (2) (d)) DAC values are given in Table 1, Column 3 of Appendix B to 10 CFR 20.1001 - 20.2401.

(cc) “Discrete source” means a radionuclide that has been processed so that its concentration within a material has been purposely increased for use for commercial, medical, or research activities.

(dd) "Dose" is a generic term that means absorbed dose, dose equivalent, effective dose equivalent, committed dose equivalent, committed effective dose equivalent, or total effective dose equivalent.

(ee) "Dose equivalent" (H_T) means the product of the absorbed dose in tissue, quality factor, and all other necessary modifying factors at the location of interest. The units of dose equivalent are the rem and Sievert (Sv).

(ff) "Dose limits" means the permissible upper bounds of radiation doses established in accordance with this Chapter. For purposes of this Chapter, "limits" is an equivalent term.

(gg) "Effective dose equivalent" (H_E) means the sum of the products of the dose equivalent to each organ or tissue (H_T) and the weighting factor (w_T) applicable to each of the body organs or tissues that are irradiated ($H_E = \Sigma\, w_T H_T$).

(hh) "Embryo/fetus" means the developing human organism from conception until the time of birth.

(ii) "Entrance or access point" means any opening through which an individual or extremity of an individual could gain access to radiation areas or to licensed radioactive materials. This includes entry or exit portals of sufficient size to permit human entry, irrespective of their intended use.

(jj) "Explosive material" means any chemical compound, mixture, or device that produces a substantial instantaneous release of gas and heat spontaneously or by contact with sparks or flame.

(kk) "Exposure" means being exposed to ionizing radiation or to radioactive material.

(ll) "Exposure rate" means the exposure per unit of time, such as Roentgen per minute or milliroentgen per hour.

(mm) "External dose" means that portion of the dose equivalent received from any source of radiation outside the body.

(nn) "Extremity" means hand, elbow, arm below the elbow, foot, knee, and leg below the knee.

(oo) "Former U.S. Atomic Energy Commission (AEC) or U.S. Nuclear Regulatory Commission (NRC) licensed facilities" means nuclear reactors, nuclear fuel reprocessing plants, uranium enrichment plants, or critical mass experimental facilities where AEC or NRC licenses have been terminated.

(pp) "Generally applicable environmental radiation standards" means standards issued by the U.S. Environmental Protection Agency (EPA) under the authority of the Atomic Energy Act of 1954, as amended, that impose limits on radiation exposures, levels, concentrations or quantities of radioactive material, in the general environment outside the boundaries of locations under the control of persons possessing or using radioactive material.

(qq) "Gray" (Gy) means the SI unit of absorbed dose. One Gray is equal to an absorbed dose of one Joule/kilogram (100 rad).

(rr) "Hazardous waste" means those wastes designated as hazardous by U.S. Environmental Protection Agency regulations in 40 CFR Part 261.

(ss) "Healing arts" means medicine, dentistry, chiropractic, podiatry, osteopathy or veterinary medicine.

(tt) "High radiation area" means an area, accessible to individuals, in which radiation levels from radiation sources external to the body could result in an individual receiving a dose equivalent in excess of 0.1 rem (1 mSv) in one hour at 30 centimeters from any source of radiation or from any surface that the radiation penetrates. For purposes of this Chapter, rooms or areas in which diagnostic x-ray systems are used for healing arts purposes are not considered high radiation areas.

(uu) "Human use" means the internal or external administration of radiation or radioactive material to human beings.

(vv) "Individual" means any human being.

(ww) "Individual monitoring" means the assessment of:

1. Dose equivalent by the use of:

(i) Individual monitoring devices, or

(ii) Survey data; or

2. Committed effective dose equivalent:

(i) By bioassay, or

(ii) By determination of the time-weighted air concentrations to which an individual has been exposed, that is, DAC-hours [See the definition of DAC-hours in Rule 391-3-17-.03(2)(q)].

(xx) "Individual monitoring devices" means devices designed to be worn by a single individual for the assessment of dose equivalent. For purposes of this Chapter, individual monitoring devices and personnel monitoring equipment are equivalent terms. Examples of individual monitoring devices are film badges, thermoluminescent dosimeters (TLDs), optically stimulated luminescent devices, pocket ionization chambers, and personal air sampling devices.

(yy) "Inspection" means an official examination or observation including, but not limited to, tests, surveys, and monitoring to determine compliance with Rules, Regulations, Orders, requirements, and conditions of the Department.

(zz) "Interlock" means a device arranged or connected such that the occurrence of an event or condition is required before a second event or condition can occur or continue to occur.

(aaa) "Internal dose" means that portion of the dose equivalent received from radioactive material taken into the body.

(bbb) "Lens dose equivalent" (LDE) means the external exposure of the lens of the eye and is taken as the dose equivalent at a tissue depth of 0.3 centimeter (300 mg/cm^2).

(ccc) "License" means a license issued by the Department in accordance with the Regulations promulgated by the Board.

(ddd) "Licensed material" means radioactive material received, possessed, used, transferred or disposed of under a general or specific license issued by the Department.

(eee) "Licensee" means any person who is licensed by the Department in accordance with this Chapter and the Act.

(fff) "Licensing State" means any state with regulations equivalent to the Suggested State Regulations for Control of Radiation relating to, and an effective program for, the regulatory control of NARM and which has been granted final designation by the Conference of Radiation Control Program Directors, Inc.

(ggg) "Limits" [See Dose limits].

(hhh) "Lost or missing licensed material" means licensed material whose location is unknown. This definition includes licensed material that has been shipped but has not reached its planned destination and whose location cannot be readily traced in the transportation system.

(iii) "Major processor" means a user processing, handling, or manufacturing radioactive material exceeding Type A quantities as unsealed sources or material, or exceeding four times Type B quantities as sealed sources, but does not include nuclear medicine programs, universities, industrial radiographers, or small industrial programs. Type A and B quantities are defined in Section 71.4 of 10 CFR Part 71.

(jjj) "Management" means the chief executive officer or other individual having the authority to manage, direct, or administer the licensee’s activities, or those persons’ delegate or delegates.

(kkk) "Member of the public" means any individual except when that individual is receiving an occupational dose.

(lll) "Minor" means an individual less than 18 years of age.

(mmm) "Monthly" means once every calendar month, not to exceed an interval of 35 days.

(nnn) "Monitoring" means the measurement of radiation, radioactive material concentrations, surface area activities or quantities of radioactive material and the use of the results of these measurements to evaluate potential exposures and doses. For purposes of this Chapter, "radiation monitoring" and "radiation protection monitoring" are equivalent terms.

(ooo) "NARM" means any naturally-occurring or accelerator-produced radioactive material. It does not include byproduct, source, or special nuclear material.

(ppp) "Natural radioactivity" means radioactivity of naturally-occurring nuclides.

(qqq) "NORM" (Naturally-Occurring Radioactive Material) means any nuclide which is radioactive in its natural physical state (i.e., not man-made), but does not include byproduct, source, or special nuclear material.

(rrr) "Nuclear Regulatory Commission" (NRC) means the U.S. Nuclear Regulatory Commission or its duly authorized representatives.

(sss) "Occupational dose" means the dose received by an individual in the course of employment while engaged in activities licensed by the Department in which the individual's assigned duties involve exposure to licensed and unlicensed sources of radiation whether in the possession of the licensee, or other person. Occupational dose does not include doses received from background radiation, as a patient from medical practices, from exposure from individuals administered radioactive material and released in accordance with Rule 391-3-17-.05(37), from voluntary participation in medical research programs, or as a member of the public.

(ttt) "Package" means the assembly of components necessary to ensure compliance with packing requirements of DOT regulations together with its radioactive contents as presented for transport.

1. "Fissile material package" means a fissile material packaging together with its fissile material contents.

2. "Type B package" means a Type B packaging together with its radioactive contents. On approval, a Type B package design is designated by NRC as B(U) unless the package has a maximum normal operating pressure of more than 700 kPa (100 lb/in^2) gauge or pressure relief device that will allow the release of radioactive material to the environment under the tests specified in 10 CFR 71 (hypothetical accident conditions), in which case it will receive a designation B(M). B(U) refers to the need for unilateral approval of international shipments; B(M) refers to the need for multilateral approval of international shipments. There is no distinction made in how packages with these designations may be used in domestic transportation. To determine their distinction for international transportation, see DOT regulations in 49 CFR 173. A Type B package approved before September 6, 1983, was designated only as Type B. Limitations on its use are specified in 10 CFR 71.13.

(uuu) "Particle accelerator" means any machine capable of accelerating electrons, protons, deuterons, or other charged particles in a vacuum and of discharging the resultant particulate or other radiation into a medium at energies usually in excess of one MeV. For purposes of this definition, "accelerator" is an equivalent term.

(vvv) "Person" means any individual, corporation, partnership, firm, association, trust, estate, public or private institution, group, agency, political subdivision of this State, any other state or political subdivision or agency thereof, and any legal successor, representative, agent, or department of the foregoing, but shall not include federal government agencies.

(www) "Personnel monitoring equipment" [See Individual monitoring devices].

(xxx) "Pharmacist" means any individual who is licensed to practice Pharmacy in this State by the Georgia State Board of Pharmacy.

(yyy) "Physician" means any person who is licensed to engage in the practice of medicine under the Authority of O.C.G.A. 43-34-20 or the limited practice of medicine under O.C.G.A. 43-35-1.

(zzz) “Positron Emission Tomography (PET) radionuclide production facility” is defined as a facility operating a cyclotron or accelerator for the purpose of producing PET radionuclides.

(aaaa) "Principal activities," as used in this Chapter, means activities authorized by the license which are essential to achieving the purpose(s) for which the license was issued or amended. Storage during which no license material is accessed for use or disposal and activities incidental to decontamination or decommissioning are not principal activities.

(bbbb) "Public dose" means the dose received by a member of the public from radiation and/or radioactive material released by a licensee or from any other source of radiation under the control of a licensee. It does not include occupational dose, doses received from background radiation, doses received as a patient from medical practices, from exposure from individuals administered radioactive material and released in accordance with Rule 391-3-17-.05(37), or doses from voluntary participation in medical research programs.

(cccc) "Pyrophoric liquid" means any liquid that ignites spontaneously in dry or moist air at or below 130 °F (54.4 °C). A pyrophoric solid is any solid material, other than one classed as an explosive, which under normal conditions is liable to cause fires through friction, retained heat from manufacturing or processing, or which can be ignited readily and, when ignited, burns so vigorously and persistently as to create a serious transportation, handling, or disposal hazard. Included are spontaneously combustible and water-reactive materials.

(dddd) "Qualified expert" means an individual having the knowledge and training to measure ionizing radiation, to evaluate safety techniques, and to advise regarding radiation protection needs, for example, individuals certified in the appropriate field by the American Board of Radiology or the American Board of Health Physics, or those having equivalent qualifications. With reference to the calibration of radiation therapy equipment, an individual having, in addition to the above qualifications, training and experience in the clinical applications of radiation physics to radiation therapy, for example, individuals certified in Therapeutic Radiological Physics or X-Ray and Radium Physics by the American Board of Radiology, or those having equivalent qualifications.

(eeee) "Quality factor" (Q) means the modifying factor, listed in Tables 1 and 2 of this Rule that is used to derive dose equivalent from absorbed dose.

(ffff) "Quarterly" means once every three calendar months or no later than the last day of the third month after the initial month.

(gggg) "Rad" means the special unit of absorbed dose. One rad is equal to an absorbed dose of 100 ergs/gram or 0.01 Joule/kilogram (0.01 Gray).

(hhhh) "Radiation" means alpha particles, beta particles, gamma rays, x- rays, neutrons, high-speed electrons, high-speed protons, and other particles capable of producing ions. For purposes of this Chapter, ionizing radiation is an equivalent term. Radiation, as used in this Chapter, does not include non-ionizing radiation, such as radiowaves, microwaves, visible, infrared, or ultraviolet light.

(iiii) "Radiation area" means any area, accessible to individuals, in which radiation levels could result in an individual receiving a dose equivalent in excess of 5 mrem (0.05 mSv) in one hour at 30 centimeters from the source of radiation or from any surface that the radiation penetrates.

(jjjj) "Radiation machine" means any device capable of producing radiation except those devices with radioactive material as the only source of radiation.

(kkkk) "Radiation Safety Officer" (RSO) means an individual who has the knowledge and responsibility to apply appropriate radiation protection regulations.

(llll) "Radioactive material" means any solid, liquid, or gas that emits radiation spontaneously.

(mmmm) "Radioactivity" means the transformation of unstable atomic nuclei by the emission of radiation.

(nnnn) "Regulations of the U.S. Department of Transportation" means the regulations in 49 CFR Parts 100-189.

(oooo) "Rem" means the special unit of any of the quantities expressed as dose equivalent. The dose equivalent in rem is equal to the absorbed dose in rad multiplied by the quality factor (1 rem = 0.01 Sievert).

(pppp) "Research and development" means

1. Theoretical analysis, exploration, or experimentation; or

2. The extension of investigative findings and theories of a scientific or technical nature into practical application for experimental and demonstration purposes, including the experimental production and testing of models, devices, equipment, materials, and processes. Research and development does not include the internal or external administration of radiation or radioactive material to human beings.

(qqqq) "Restricted area" means any area to which access is limited by the licensee for purposes of protecting individuals against undue risks from exposure to sources of radiation and

radioactive material. A restricted area does not include areas used as residential quarters, but separate rooms in a residential building may be set apart as a restricted area.

(rrrr) "Roentgen" means the special unit of exposure. One Roentgen (R) equals 2.58×10^{-4} Coulombs/kilogram of air.

(ssss) "Sealed source" means radioactive material that is permanently bonded or fixed in a capsule or matrix designed to prevent release and dispersal of the radioactive material under the most severe conditions which are likely to be encountered in normal use and handling.

(tttt) “Sealed Source and Device Registry” means the national registry that contains all the registration certificates, generated by both the NRC and the Agreement States, that summarize the radiation safety information for the sealed sources and devices and describe the licensing and use conditions approved for the product.

(uuuu) "Shallow dose equivalent" (H_s), which applies to the external exposure of the skin of the whole body or the skin of an extremity, means the dose equivalent at a tissue depth of 0.007 centimeter (7 mg/cm^2).

(vvvv) "SI" means an abbreviation of the International System of Units.

(wwww) "Sievert" means the SI unit of any of the quantities expressed as dose equivalent. The dose equivalent in Sievert is equal to the absorbed dose in Gray multiplied by the quality factor (1 Sv = 100 rem).

(xxxx) "Site boundary" means that line beyond which the land or property is not owned, leased, or otherwise controlled by the licensee.

(yyyy) "Source material" means

1. Uranium or thorium, or any combination thereof, in any physical or chemical form; or

2. Ores that contain by weight one-twentieth of one percent (0.05 percent) or more of uranium, thorium, or any combination thereof. Source material does not include special nuclear material.

(zzzz) "Source material milling" means any activity that results in the production of byproduct material as defined by .01(2)(o)2.

(aaaaa) "Source of radiation" means any radioactive material or any device or equipment emitting, or capable of producing, radiation.

(bbbbb) "Special form radioactive material" means radioactive material that satisfies the following conditions:

1. It is either a single solid piece or is contained in a sealed capsule that can be opened only by destroying the capsule;

2. The piece or capsule has at least one dimension not less than five millimeters (0.197 inch); and

3. It satisfies the test requirements specified by the U.S. Nuclear Regulatory Commission. A special form encapsulation designed in accordance with the U.S. Nuclear Regulatory Commission requirements in effect on June 30, 1983, and constructed prior to July 1, 1985, may continue to be used. A special form encapsulation either designed or constructed after June 30, 1985, must meet requirements of this definition applicable at the time of its design or construction.

(ccccc) "Special nuclear material" means:

1. Plutonium, uranium-233, uranium enriched in the isotope 233 or in the isotope 235, and any other material that the U.S. Nuclear Regulatory Commission, pursuant to the provisions of section 51 of the Atomic Energy Act of 1954, as amended, determines to be special nuclear material but does not include source material; or

2. Any material artificially enriched by any of the foregoing but does not include source material.

(ddddd) "Special nuclear material in quantities not sufficient to form a critical mass" means uranium enriched in the isotope U-235 in quantities not exceeding 350 grams of contained U-235; uranium-233 in quantities not exceeding 200 grams; plutonium in quantities not exceeding 200 grams; or any combination of them in accordance with the following formula: For each kind of special nuclear material, determine the ratio between the quantity of that special nuclear material and the quantity specified above for the same kind of special nuclear material. The sum of such ratios for all of the kinds of special nuclear material in combination shall not exceed 1.

For example, the following quantities in combination would not exceed the limitation and are within the formula:

$$\frac{175 \text{ (grams contained U-235)}}{350} + \frac{50 \text{ (grams U-233)}}{200} + \frac{50 \text{ (grams Pu)}}{200} \leq 1$$

(eeeee) "Survey" means an evaluation of the radiological conditions and potential hazards incident to the production, use, transfer, release, disposal, or presence of sources of radiation. When appropriate, such evaluation includes, but is not limited to, tests, physical examinations, and measurements of levels of radiation or concentrations of radioactive material present.

(fffff) "Test" means the process of verifying compliance with an applicable regulation.

(ggggg) "This Chapter" means all of the Rules in Chapter 391-3-17.

(hhhhh) "Total effective dose equivalent" (TEDE) means the sum of the effective dose equivalent (for external exposures) and the committed effective dose equivalent (for internal exposures).

(iiiiii) "U.S. Department of Energy" means the Department of Energy established by Public Law 95-91, August 4, 1977, 91 Stat. 565, 42 U.S.C. 7101 et seq., to the extent that the Department exercises functions formerly vested in the U.S. Atomic Energy Commission, its Chairman, members, officers, and components and transferred to the U.S. Energy Research and Development Administration and to the Administrator thereof pursuant to sections 104(b), (c) and (d) of the Energy Reorganization Act of 1974 (Public Law 93-438, October 11, 1974, 88 Stat. 1233 at 1237, 42 U.S.C. 5814, effective January 19, 1975) and retransferred to the

Secretary of Energy pursuant to section 301(a) of the Department of Energy Organization Act (Public Law 95-91, August 4, 1977, 91 Stat. 565 at 577-578, 42 U.S.C. 7151, effective October 1, 1977).

(jjjjj) "Unrefined and unprocessed ore" means ore in its natural form prior to any processing, such as grinding, roasting, beneficiating, or refining.

(kkkkk) "Unrestricted area" means an area to which access is neither limited nor controlled by the licensee.

(llll) "Very High Radiation Area" means an area, accessible to individuals, in which radiation levels could result in an individual receiving an absorbed dose in excess of 500 rads (5 Grays) in one hour at one meter from a radiation source or from any surface that the radiation penetrates.

(mmmmm) "Waste" means those low-level radioactive wastes containing source, special nuclear, or byproduct material that are acceptable for disposal in a land disposal facility. For the purposes of this definition, low-level waste has the same meaning as radioactive waste not classified as high-level radioactive waste, transuranic waste, spent nuclear fuel, or byproduct material as defined in .01(2)(o)2., 3., and 4.

(nnnnn) "Waste handling licensees" mean persons licensed to receive and store radioactive wastes prior to disposal and/or persons licensed to dispose of radioactive waste.

(ooooo) "Weekly" means once every calendar week, not to exceed an interval of ten days.

(ppppp) "Whole body" means, for purposes of external exposure, head, trunk, including male gonads, arms above the elbow, or legs above the knee.

(qqqqq) "Worker" means an individual engaged in work under a license issued by the Department and controlled by a licensee. If the licensee is an individual rather than one of the other legal entities defined under "person," the radiation exposure limits for the worker also apply to the individual who is the licensee.

(rrrrr) "Working level" (WL) means any combination of short-lived radon daughters in one liter of air that will result in the ultimate emission of 1.3×10^5 MeV of potential alpha particle energy. The short-lived radon daughters for radon-222 are: polonium-218, lead-214, bismuth-214, and polonium-214; and for radon-220: polonium-216, lead-212, bismuth-212, and polonium-212.

(sssss) "Working level month" (WLM) means an exposure to one working level for 170 hours. Two thousand working hours per year divided by 12 months per year is approximately equal to 170 hours per month.

(ttttt) "Year" means the period of time beginning in January used to determine compliance with the provisions of this Chapter. The licensee may change the starting date of the year used to determine compliance by the licensee provided that the change is made at the beginning of the year and that no day is omitted or duplicated in consecutive years.

(3) **Exemptions from the Regulatory Requirements.**

(a) General Provision. The Department may, upon application or upon its own initiative, grant such exemptions or exceptions from the requirements of this Chapter as it determines are authorized by law and will not result in undue hazard to public health and safety or property.

(b) U.S. Department of Energy Contractors and U.S. Nuclear Regulatory Commission Contractors. Any U.S. Department of Energy contractor or subcontractor and any U.S. Nuclear Regulatory Commission contractor or subcontractor of the following categories operating within this State are exempt from this Chapter to the extent that such contractor or subcontractor under his contract receives, possesses, uses, transfers, or acquires sources of radiation:

1. Prime contractors performing work for the U.S. Department of Energy at U.S. government-owned or -controlled sites, including the transportation of sources of radiation to or from such sites and the performance of contract services during temporary interruptions of such transportation;

2. Prime contractors of the U.S. Department of Energy performing research in, or development, manufacture, storage, testing, or transportation of, atomic weapons or components thereof;

3. Prime contractors of the U.S. Department of Energy using or operating nuclear reactors or other nuclear devices in a United States government-owned vehicle or vessel; and

4. Any other prime contractor or subcontractor of the U.S. Department of Energy or of the U.S. Nuclear Regulatory Commission when the Department and the Nuclear Regulatory Commission jointly determine:

(i) That the exemption of the prime contractor or subcontractor is authorized by law; and

(ii) That, under the terms of the contract or subcontract, there is adequate assurance that the work thereunder can be accomplished without undue risk to public health and safety.

(4) **Records.** Each licensee shall maintain records showing the receipt, transfer, and disposal of all sources of radiation. Additional record requirements are specified elsewhere in this Chapter.

(5) **Inspections.**

(a) Each licensee shall afford the Department at all reasonable times opportunity to inspect sources of radiation and the premises and facilities wherein such sources of radiation are used or stored.

(b) Each licensee shall make available to the Department for inspection, upon reasonable notice, records maintained pursuant to this Chapter.

(c) The Department or its designated representative is authorized under the authority of O.C.G.A. 31-5-5(b) to classify as confidential and privileged such documents, reports, and other information and data obtained from persons, firms, corporations, municipalities, counties, and other public authorities and political subdivisions where such matters relate to:

1. Trade secrets and commercial or financial information furnished to the Department on a privileged or confidential basis. Matters subject to this exemption are those that are customarily held in confidence by the originator. They include, but are not limited to:

(i) Information received in confidence, such as trade secrets, inventions, and proprietary data;

(ii) Technical reports and data, designs, drawings, specifications, formulas, or other types of proprietary information which are furnished to the Department or which are generated or developed by the Department or for the Department under contract.

2. Personnel and medical files and similar files, the disclosure of which would constitute a clearly unwarranted invasion of personal privacy. Examples of files exempt from disclosure include, but are not limited to names or identifying information regarding individuals who have received exposure to radiation.

(d) Discovery of material qualified pursuant to 391-3-17-.01(5)(c) shall be subject to the statutory requirements found in O.C.G.A. 31-5-5.

(6) **Tests.** Each licensee shall perform upon instructions from the Department, or shall permit the Department to perform, such reasonable tests as the Department deems appropriate or necessary, including, but not limited to, tests of:

(a) Sources of radiation;

(b) Facilities wherein sources of radiation are used or stored;

(c) Radiation detection and monitoring instruments; and

(d) Other equipment and devices used in connection with utilization or storage of licensed sources of radiation.

(7) **Additional Requirements.** The Department, by Rule or Regulation, and the Director by Order, may impose upon any licensee such requirements in addition to those established in this Chapter as it deems appropriate or necessary to minimize danger to public health and safety or property.

(8) **Violations.**

(a) An injunction or other court order may be obtained prohibiting any violation of the provisions of the Act, this Chapter, or any Order issued thereunder in accordance with Rule 391-3-17-.11. Any person who willfully violates any provision of the Act, this Chapter, or any Order issued thereunder may be guilty of a misdemeanor as provided by law. Violators of this Chapter may also be subject to civil penalties in accordance with O.C.G.A. 31-13-15.

(b) Any licensee, certificate of registration holder, applicant for a license or certificate of registration, employee of a licensee, certificate of registration holder or applicant; or any contractor (including a supplier or consultant), subcontractor, employee of a contractor or subcontractor of any licensee or certificate of registration holder or applicant for a license or certificate of registration, who knowingly provides to any licensee, applicant, certificate holder, contractor, or subcontractor, any components, equipment, materials, or other goods or services that relate to a licensee's, certificate holder's or applicant's activities in this part, may not:

1. Engage in deliberate misconduct that causes or would have caused, if not detected, a licensee, certificate of registration holder, or applicant to be in violation of any Rule, Regulation, or Order; or any term, condition, or limitation of any license issued by the Department; or

2. Deliberately submit to the Department, a licensee, certificate of registration holder, an applicant, or a licensee's, certificate holder's or applicant's, contractor or subcontractor, information that the person submitting the information knows to be incomplete or inaccurate in some respect material to the Department.

(c) A person who violates 8(b)1. or 8(b)2. may be subject to enforcement action in accordance with the provisions of Rule .11 of this Chapter.

(d) For the purposes of 8(b)1., deliberate misconduct by a person means an intentional act or omission that the person knows:

1. Would cause a licensee, certificate of registration holder or applicant to be in violation of any Rule, Regulation, or Order; or any term, condition, or limitation, of any license issued by the Department; or

2. Constitutes a violation of a requirement, procedure, instruction, contract, purchase order, or policy of a licensee, certificate of registration holder, applicant, contractor, or subcontractor.

(9) **Impounding.** The Department shall have the authority in the event of an emergency to impound or order the impounding of radioactive material in the possession of any person who is not equipped to observe or fails to observe the provisions of this Chapter or any Rules issued thereunder.

(a) Upon a showing that the emergency no longer exists and the owner of the radioactive material has demonstrated that he has achieved and is capable of maintaining compliance with the Act, the terms and conditions of his license, and all Rules, Regulations, and Orders of the Department, the Department may return the impounded radioactive material to its owner.

(b) In the event an owner cannot demonstrate his ability to achieve and maintain compliance with the Act, the terms and conditions of his license, and all Rules, Regulations, and Orders of the Department, the Department is authorized to seek a court order condemning such radioactive material and providing for its destruction or other disposition for the health and safety of the populace.

(10) **Severability.** Should any section, paragraph, sentence, clause or phrase of this Chapter be declared unconstitutional or invalid for any reason, the remainder of this Chapter shall not be affected thereby.

(11) **Units of Exposure and Dose.**

(a) As used in this Chapter, the unit of Exposure is the Coulomb per kilogram (C/kg). One Roentgen is equal to 2.58×10^{-4} Coulomb per kilogram of air.

(b) As used in this Chapter, the units of dose are:

1. Gray (Gy) is the SI unit of absorbed dose. One Gray is equal to an absorbed dose of 1 Joule/kilogram (100 rad).

2. Rad is the special unit of absorbed dose. One rad is equal to an absorbed dose of 100 ergs/gram or 0.01 Joule/kilogram (0.01 Gy).

3. Rem is the special unit of any of the quantities expressed as dose equivalent. The dose equivalent in rem is equal to the absorbed dose in rad multiplied by the quality factor (1 rem = 0.01 Sv).

4. Sievert is the SI unit of any of the quantities expressed as dose equivalent. The dose equivalent in Sievert is equal to the absorbed dose in Gray multiplied by the quality factor (1 Sv = 100 rem).

(c) As used in this Chapter, the quality factors for converting absorbed dose to dose equivalent are shown in Table I.

TABLE I
QUALITY FACTORS AND ABSORBED DOSE EQUIVALENCIES

TYPE OF RADIATION	Quality Factor (Q)	Absorbed Dose Equal to a Unit Dose Equivalent [(a)]
X, gamma, or beta radiation and high-speed electrons	1	1
Alpha particles, multiple-charged particles, fission fragments and heavy particles of unknown charge	20	0.05
Neutrons of unknown energy	10	0.1
High-energy protons	10	0.1

[(a)] Absorbed dose in rad equal to 1 rem or the absorbed dose in Gray equal to 1 Sv.

(d) If it is more convenient to measure the neutron fluence rate than to determine the neutron dose equivalent rate in Sievert per hour or rem per hour, as provided in (11)(c) of this Rule, 0.01 Sv (1 rem) of neutron radiation of unknown energies may, for purposes of this Chapter, be assumed to result from a total fluence of 25 million neutrons per square centimeter incident upon the body. If sufficient information exists to estimate the approximate energy distribution of the neutrons, the licensee may use the fluence rate per unit dose equivalent or the appropriate Q value from Table II to convert a measured tissue dose in Gray or rad to dose equivalent in Sievert or rem.

TABLE II

MEAN QUALITY FACTORS, Q, AND FLUENCE PER UNIT DOSE EQUIVALENT FOR MONOENERGETIC NEUTRONS

	Neutron Energy (MeV)	Quality Factor [a] (Q)	Fluence per Unit Dose Equivalent [b] (neutrons cm^{-2} rem^{-1})	Fluence per Unit Dose Equivalent [b] (neutrons cm^{-2} Sv^{-1})
(thermal)	2.5×10^{-8}	2	980×10^{6}	980×10^{8}
	1×10^{-7}	2	980×10^{6}	980×10^{8}
	1×10^{-6}	2	810×10^{6}	810×10^{8}
	1×10^{-5}	2	810×10^{6}	810×10^{8}
	1×10^{-4}	2	840×10^{6}	840×10^{8}
	1×10^{-3}	2	980×10^{6}	980×10^{8}
	1×10^{-2}	2.5	1010×10^{6}	1010×10^{8}
	1×10^{-1}	7.5	170×10^{6}	170×10^{8}
	5×10^{-1}	11	39×10^{6}	39×10^{8}
	1	11	27×10^{6}	27×10^{8}
	2.5	9	29×10^{6}	29×10^{8}
	5	8	23×10^{6}	23×10^{8}
	7	7	24×10^{6}	24×10^{8}
	10	6.5	24×10^{6}	24×10^{8}
	14	7.5	17×10^{6}	17×10^{8}
	20	8	16×10^{6}	16×10^{8}
	40	7	14×10^{6}	14×10^{8}
	60	5.5	16×10^{6}	16×10^{8}
	1×10^{2}	4	20×10^{6}	20×10^{8}
	2×10^{2}	3.5	19×10^{6}	19×10^{8}
	3×10^{2}	3.5	16×10^{6}	16×10^{8}
	4×10^{2}	3.5	14×10^{6}	14×10^{8}

[a] Value of quality factor (Q) at the point where the dose equivalent is maximum in a 30-cm diameter cylinder tissue-equivalent phantom.

[b] Monoenergetic neutrons incident normally on a 30-cm diameter cylinder tissue-equivalent phantom.

(12) **Units of Radioactivity.** For purposes of this Chapter, activity is expressed in the SI unit of Becquerel (Bq) or in the special unit of Curie (Ci), or their multiples, or disintegrations or transformations per unit of time.

(a) One Becquerel (Bq) = 1 disintegration or transformation per second.

(b) One Curie (Ci) = 3.7×10^{10} disintegrations or transformations per second = 3.7×10^{10} Becquerel (Bq) = 2.22×10^{12} disintegrations or transformations per minute.

(13) **Communications.** All communications and reports concerning this Chapter, and applications filed thereunder should be addressed to the Georgia Department of Natural Resources/EPD, Radioactive Materials Program, at 4244 International Parkway, Suite 120, Atlanta, Georgia 30354.

a) Georgia Emergency Radiological Assistance Numbers.

GEORGIA EMERGENCY RADIOLOGICAL ASSISTANCE TELEPHONE NUMBERS

To Report a Radiological Emergency or Request Emergency Radiological Assistance,
Call the Following Number **During Business Hours:**
Georgia Environmental Protection Division
Radioactive Materials Program and Environmental Radiation Program

(404) 362-2675
or
(404) 363-7000

For **24-Hour** Radiological Assistance, Call:
Georgia Emergency Management Agency
Emergency Operations Center

(404) 656-4863

Outside the Atlanta Toll-Free Calling Area (In Georgia Only), Call:
Georgia Emergency Management Agency
Emergency Operations Center

1-800-241-4113

Authority: O.C.G.A. §§ 31-13-1 et seq. **History.** Original Rule entitled “General Provisions” adopted. F. May 2, 1991; eff. May 22, 1991. **Amended:** F. Feb. 24, 1994; eff. Mar. 16, 1994. **Amended:** F. Oct. 4, 1994; eff. Oct. 24, 1994. **Amended:** F. Apr. 16, 1997; eff. May 6, 1997. **Amended:** F. Mar. 29, 2002; eff. Apr. 18, 2002. **Amended:** F. May 30, 2003; eff. July 1, 2003, as specified by the Agency. **Amended:** F. Oct. 17, 2008; eff. Nov. 6, 2008. **Amended:** F. Jan. 8, 2014; eff. Jan. 28, 2014.

391-3-17-.02 Licensing Of Radioactive Material. Amended

(1) **Purpose and Scope.**

(a) This Rule, 391-3-17-.02, provides for the licensing of radioactive material. No person shall receive, possess, use, transfer, own, or acquire radioactive material except as authorized in a specific or general license issued pursuant to this Rule or as otherwise provided in this Chapter. However, nothing in this Rule shall apply to any person to the extent such person is subject to regulation by the U.S. Nuclear Regulatory Commission.

(b) In addition to the requirements of this Rule, all licensees are subject to the requirements of Rules .01, .03, .06, .07, .10, and .11 of this Chapter. Licensees engaged in industrial radiographic operations are subject to the requirements of Rule .04 of this Chapter. Licensees using radioactive material in the healing arts are also subject to the requirements of Rule .05 of this Chapter. Licensees engaged in the extrusion, mining, storage, beneficiating, processing, use, transfer, or disposal of NORM in such a manner as to alter the chemical properties or physical state of the NORM or its potential exposure pathways to humans are also subject to the requirements of Rule .08 of this Chapter. Licensees using irradiators whose dose rate exceeds 500 rads (5 Grays) per hour at one meter from the radioactive sealed sources are also subject to the requirements of Rule .09 of this Chapter.

Note: All numbered and lettered references within this Rule refer to parts of this Rule, unless stated otherwise.

(2) **Exemptions/Source Material.**

(a) Any person is exempt from this Rule to the extent that such person receives, possesses, uses, owns, or transfers source material in any chemical mixture, compound, solution, or alloy in which the source material is by weight less than 1/20 of one percent (0.05 percent) of the mixture, compound, solution, or alloy.

(b) Any person is exempt from this Rule to the extent that such person receives, possesses, uses, or transfers unrefined and unprocessed ore containing source material; provided that, except as authorized in a specific license, such person shall not refine or process such ore.

(c) Any person is exempt from this Rule to the extent that such person receives, possesses, uses, or transfers:

1. Any quantities of thorium contained in:

(i) Incandescent gas mantles,

(ii) Vacuum tubes,

(iii) Welding rods,

(iv) Electric lamps for illuminating purposes provided that each lamp does not contain more than 50 milligrams of thorium,

(v) Germicidal lamps, sunlamps, and lamps for outdoor or industrial lighting provided that each lamp does not contain more than two grams of thorium,

(vi) Rare earth metals and compounds, mixtures, and products containing not more than 0.25 percent by weight thorium, uranium, or any combination of these, or

(vii) Personnel neutron dosimeters, provided that each dosimeter does not contain more than 50 milligrams of thorium;

2. Source material contained in the following products:

(i) Glazed ceramic tableware, provided that the glaze contains not more than 20 percent by weight source material,

(ii) Glassware containing not more than ten percent by weight source material, but not including commercially manufactured glass brick, pane glass, ceramic tile, or other glass or ceramic used in construction,

(iii) Glass enamel or glass enamel frit containing not more than ten percent by weight source material imported or ordered for importation into the United States, or initially distributed by manufacturers in the United States, before July 25, 1983, or

(iv) Piezoelectric ceramic containing not more than two percent by weight source material;

3. Photographic film, negatives, and prints containing uranium or thorium;

4. Any finished product or part fabricated of, or containing, tungsten-thorium or magnesium-thorium alloys, provided that the thorium content of the alloy does not exceed four percent by weight and that this exemption shall not be deemed to authorize the chemical, physical, or metallurgical treatment or processing of any such product or part;

5. Uranium contained in counterweights installed in aircraft, rockets, projectiles, and missiles, or stored or handled in connection with installation or removal of such counterweights, provided that:

(i) The counterweights are manufactured in accordance with a specific license issued by the U.S. Nuclear Regulatory Commission (NRC), authorizing distribution by the licensee pursuant to 10 CFR Part 40,

(ii) Each such counterweight has been impressed with the following legend clearly legible through any plating or other covering: "DEPLETED URANIUM",

(iii) Each counterweight is durably and legibly labeled or marked with the identification of the manufacturer and the statement: "UNAUTHORIZED ALTERATIONS PROHIBITED", and

(iv) This exemption shall not be deemed to authorize the chemical, physical, or metallurgical treatment or processing of any such counterweights other than repair or restoration of any plating or other covering;

Note: The requirements specified in (2)(c)5.(ii) and (iii) need not be met by counterweights manufactured prior to December 31, 1969, provided that such counterweights are impressed with the legend: "CAUTION - RADIOACTIVE MATERIAL - URANIUM".

6. Natural or depleted uranium metal used as shielding constituting part of any shipping container which is conspicuously and legibly impressed with the legend: "CAUTION - RADIOACTIVE SHIELDING - URANIUM" and the uranium metal is encased in mild steel or equally fire-resistant metal of minimum wall thickness of 1/8 inch (3.2 mm);

7. Thorium contained in finished optical lenses, provided that each lens does not contain more than 30 percent by weight of thorium, and that this exemption shall not be deemed to authorize either:

(i) The shaping, grinding, or polishing of such lens or manufacturing processes other than the assembly of such lens into optical systems and devices without any alteration of the lens, or

(ii) The receipt, possession, use, or transfer of thorium contained in contact lenses, in spectacles, or in eyepieces in binoculars or other optical instruments;

8. Uranium contained in detector heads for use in fire detection units, provided that each detector head contains not more than 0.005 microcurie of uranium; or

9. Thorium contained in any finished aircraft engine part containing nickel-thoria alloy, provided that:

(i) The thorium is dispersed in the nickel-thoria alloy in the form of finely divided thoria (thorium dioxide), and

(ii) The thorium content in the nickel-thoria alloy does not exceed four percent by weight.

(d) The exemptions in paragraph (2)(c) do not authorize the manufacture of any of the products described.

(3) **Exemptions/Radioactive Material Other Than Source Material.**

(a) Exempt Concentrations.

1. Except as provided in (3)(a)3. and 4., any person is exempt from this Chapter to the extent that such person receives, possesses, uses, transfers, owns, or acquires products containing radioactive material in concentrations not in excess of those listed in (21)(a), Schedule A.

2. This section shall not be deemed to authorize the import of radioactive material or products containing radioactive material.

3. A manufacturer, processor, or producer of a product or material is exempt from the requirements of this Rule to the extent that this person transfers products containing radioactive material in concentrations not in excess of those listed in (21)(a) Schedule A and introduced into the product or material by a licensee holding a specific license issued by the Department expressly authorizing such introduction. This exemption does not apply to the transfer of radioactive material contained in any food, beverage, cosmetic, drug, or other commodity or product designed for ingestion or inhalation by, or application to, a human being.

4. No person may introduce radioactive material into a product or material knowing or having reason to believe that it will be transferred to persons exempt under (3)(a). or equivalent Regulations of the U.S. Nuclear Regulatory Commission, any Agreement State, or a Licensing State, except in accordance with a specific license issued pursuant to 10 CFR 32.11.

(b) Exempt Quantities.

1. Except as provided in (3)(b)3. through 5., any person is exempt from this Chapter to the extent that such person receives, possesses, uses, transfers, owns, or acquires radioactive material in individual quantities each of which does not exceed the applicable quantity set forth in (21)(b), Schedule B.

2 Any person, who possesses radioactive material received or acquired before September 25, 1971, under the general license then provided in 10 CFR 31.4, or similar general license of an Agreement State, is exempt from the requirements of this Chapter to the extent that this person possesses, uses, transfers, or owns byproduct material.

3. Paragraph (3)(b) does not authorize the production, packaging, repackaging, or transfer of radioactive material for purposes of commercial distribution, or the incorporation of radioactive material into products intended for commercial distribution.

4. No person may, for purposes of commercial distribution, transfer radioactive material in the individual quantities set forth in (21)(b), Schedule B, knowing or having reason to believe that such quantities of radioactive material will be transferred to persons exempt under (3)(b) or equivalent regulations of the U.S. Nuclear Regulatory Commission, any Agreement State, or a Licensing State, except in accordance with a specific license issued by the U.S. Nuclear Regulatory Commission pursuant to Section 32.18 of 10 CFR, Part 32, or by the Department pursuant to (11)(b) which license states that the radioactive material may be transferred by the licensee to persons exempt under (3)(b) or the equivalent regulations of the U.S. Nuclear Regulatory Commission, an Agreement State, or a Licensing State.

5. No person may, for purposes of producing an increased radiation level, combine quantities of byproduct material covered by this exemption so that the aggregate quantity exceeds the limits set forth in (21)(b), Schedule B, except for radioactive material combined within a device placed in use before May 3, 1999, or as otherwise permitted by this Chapter.

(c) Exempt Items.

1. Certain Items Containing Radioactive Material. Except for persons who apply radioactive material to, or who incorporate radioactive material into, the following products, or persons who initially transfer for sale or distribution the following products containing radioactive material, any person is exempt from the requirements for a license set forth in this Chapter to the extent that he receives, possesses, uses, transfers, owns, or acquires the following products:

Note: Authority to transfer possession or control by the manufacturer, processor, or producer of any equipment, device, commodity, or other product containing radioactive material whose subsequent possession, use, transfer, and disposal by all other persons are exempted from regulatory requirements may be obtained only from the U.S. Nuclear Regulatory Commission, Washington, D.C., 20555.

(i) Timepieces or hands or dials containing not more than the following specified quantities of radioactive material and not exceeding the following specified radiation dose rates:

(I) 25 millicuries (925 MBq) of tritium per timepiece.

(II) 5 millicuries (185 MBq) of tritium per hand.

(III) 15 millicuries (555 MBq) of tritium per dial (bezels when used shall be considered as part of the dial).

(IV) 100 microcuries (3.7 MBq) of promethium-147 per watch or 200 microcuries (7.4 MBq) of promethium-147 per any other timepiece.

(V) 20 microcuries (0.74 MBq) of promethium-147 per watch hand or 40 microcuries (1.48 MBq) of promethium-147 per other timepiece hand.

(VI) 60 microcuries (2.22 MBq) of promethium-147 per watch dial or 120 microcuries (4.44 MBq) of promethium-147 per other timepiece dial (bezels when used shall be considered as part of the dial).

(VII) The levels of radiation from hands and dials containing promethium-147 will not exceed, when measured through 50 milligrams per square centimeter of absorber:

I. For wrist watches, 0.1 millirad (1 μGy) per hour at ten centimeters from any surface.

II. For pocket watches, 0.1 millirad (1 μGy) per hour at one centimeter from any surface.

III. For any other timepiece, 0.2 millirad (2 μGy) per hour at ten centimeters from any surface.

(VIII) One microcurie (37 kBq) of radium-226 per timepiece in intact timepieces manufactured prior to November 30, 2007.

(ii) Static elimination devices which contain, as a sealed source or sources, byproduct material consisting of a total of not more than 18.5 MBq (500 μCi) of polonium-210 per device.

(iii) Ion generating tubes designed for ionization of air that contain, as a sealed source or sources, byproduct material consisting of a total of not more than 18.5 MBq (500 μCi) of polonium-210 per device or of a total of not more than 1.85 GBq (50 mCi) of hydrogen-3 (tritium) per device.

(iv) Such devices authorized before October 23, 2012, for use under the general license then provided in Section 31.3 of 10 CFR, Part 31 and equivalent regulations of Agreement States and manufactured, tested, and labeled by the manufacturer in accordance with the specifications contained in a specific license issued by the Department.

(v) Precision balances containing not more than one millicurie (37 MBq) of tritium per balance or not more than 0.5 millicurie (18.5 MBq) of tritium per balance part manufactured before December 17, 2007.

(vi) [Reserved]

(vii) Marine compasses containing not more than 750 millicuries (27.8 GBq) of tritium gas and other marine navigational instruments containing not more than 250 millicuries (9.25 GBq) of tritium gas manufactured before December 17, 2007.

(viii) [Reserved]

(ix) Ionization chamber smoke detectors containing not more than 1 microcurie (µCi) of americium-241 per detector in the form of a foil and designed to protect life and property from fires.

(x) Electron tubes, provided that the levels of radiation from each electron tube containing radioactive material will not exceed one millirad (10 µGy) per hour at one centimeter from any surface when measured through seven milligrams per square centimeter of absorber. Provided also, that each tube does not contain more than one of the following specified quantities of radioactive material:

(I) 150 millicuries (5.55 GBq) of tritium per microwave receiver protector tube or ten millicuries (370 MBq) of tritium per any other electron tube.

(II) 1 microcurie (37 kBq) of cobalt-60.

(III) 5 microcuries (185 kBq) of nickel-63.

(IV) 30 microcuries (1.11 MBq) of krypton-85.

(V) 5 microcuries (185 kBq) of cesium-137.

(VI) 30 microcuries (1.11 MBq) of promethium-147.

NOTE: For the purpose of .02(3)(c)1.(x), "Electron tubes" includes spark gap tubes, power tubes, gas tubes including glow lamps, receiving tubes, microwave tubes, indicator tubes, pick-up tubes, radiation detection tubes, and any other completely sealed tube that is designed to conduct or control electrical currents.

(xi) Ionizing radiation measuring instruments containing, for purposes of internal calibration or standardization, one or more sources of radioactive material, provided that:

(I) Each source contains no more than one exempt quantity set forth in (21)(b), Schedule B;

(II) Each instrument contains no more than ten exempt quantities. For purposes of this requirement, an instrument's source(s) may contain either one or different types of radionuclides and an individual exempt quantity may be composed of fractional parts of one or more of the exempt quantities specified in (21)(b), Schedule B, provided that the sum of such fractions shall not exceed unity; and

(III) For purposes of .02(3)(c)1.(xi), 0.05 microcurie (1.85 kBq) of americium-241 is considered an exempt quantity under (21)(b), Schedule B.

(xii) [Reserved]

(xiii) Any person who desires to apply byproduct material to, or to incorporate byproduct material into, the products exempted in 3(c)1., or who desires to initially transfer for sale or distribution such products containing radioactive material, should apply for a specific license with the U.S. Nuclear Regulatory Commission pursuant to Section 32.14 of 10 CFR, Part 32, which license states that the product may be distributed by the licensee to persons exempt under (3)(c)1., or the equivalent regulations of the U.S. Nuclear Regulatory Commission, an Agreement State, or a Licensing State.

2. Self-Luminous Products Containing Radioactive Material.

(i) Tritium, krypton-85, or promethium-147. Except for persons who manufacture, process, produce, or initially transfer for sale or distribution self-luminous products containing tritium, krypton-85, or promethium-147, any person is exempt from the requirements for a license set forth in this Chapter to the extent that such person receives, possesses, uses, transfers, owns, or acquires tritium, krypton-85 or promethium-147 in self-luminous products manufactured, processed, produced, or initially transferred in accordance with a specific license issued by the U.S. Nuclear Regulatory Commission pursuant to Section 32.22 of 10 CFR, Part 32, which license authorizes the initial transfer of the product to persons who are exempt from regulatory requirements. This exemption does not apply to tritium, krypton-85, or promethium-147 used in products for frivolous purposes or in toys or adornments.

(ii) Radium-226. Any person is exempt from this Chapter to the extent that such person receives, possesses, uses, transfers, or owns articles containing less than 0.1 microcurie (3.7 kBq) of radium-226 that were acquired prior to July 12, 1982.

(iii) Any person who desires to manufacture, process, or produce, or initially transfer for sale or distribution self-luminous products containing tritium, krypton-85, or promethium-147 for use under paragraph .02(3)(c)2.(i) should apply for a license with the U.S. Nuclear Regulatory Commission pursuant to Section 32.22 of 10 CFR Part 32 and apply to the U.S. Nuclear Regulatory Commission for a certificate of registration in accordance with Section 32.210 of 10 CFR Part 32.

3. Gas and Aerosol Detectors Containing Radioactive Material.

(i) Except for persons who manufacture, process, produce, or initially transfer for sale or distribution gas and aerosol detectors containing radioactive material, any person is exempt from the requirements for a license set forth in this Chapter to the extent that such person receives, possesses, uses, transfers, owns, or acquires radioactive material in gas and aerosol detectors designed to protect health, safety, or property provided that detectors containing radioactive material shall have been manufactured, processed, produced, or initially transferred in accordance with a specific license issued by the U.S. Nuclear Regulatory Commission pursuant to Section 32.26 of 10 CFR, Part 32. This exemption also covers gas and aerosol detectors manufactured or distributed before November 30, 2007, in accordance with a specific license issued by a State under comparable provisions to Section 32.26 of 10 CFR, Part 32 authorizing distribution to persons exempt from regulatory requirements.

(ii) Gas and aerosol detectors containing naturally-occurring and accelerator-produced radioactive material (NARM) previously manufactured and distributed to general licensees in accordance with a specific license issued by an Agreement State shall be considered exempt under (3)(c)3.(i), provided that the device is labeled in accordance with the specific license

authorizing distribution of the generally licensed device, and provided further that they meet the requirements of 10 CFR 32.26.

(iii) Gas and aerosol detectors containing NARM previously manufactured and distributed in accordance with a specific license issued by a Licensing State shall be considered exempt under (3)(c)3.(i), provided that the device is labeled in accordance with the specific license authorizing distribution, and provided further that they meet the requirements of 10 CFR 32.26.

(iv) Any person who desires to manufacture, process, or produce gas and aerosol detectors containing radioactive material, or to initially transfer such products for use under .02(3)(c)3.(i) should apply for a license with the U.S. Nuclear Regulatory Commission pursuant to Section 32.26 of 10 CFR Part 32 and apply to the U.S. Nuclear Regulatory Commission for a certificate of registration in accordance with Section 32.210 of 10 CFR, Part 32.

4. Radioactive drug: Capsules containing carbon-14 urea for "in vivo" diagnostic use for humans.

(i) Except as provided in .02(3)(c)4.(ii) and .02(3)(c)4.(iii), any person is exempt from the requirements for a license set forth in O.C.G.A. Section 31-13-5(a)(9) (Georgia Radiation Control Act) and from the regulations in this Chapter provided that such person receives, possesses, uses, transfers, owns, or acquires capsules containing one µCi (37 kBq) carbon-14 urea (allowing for nominal variation that may occur during the manufacturing process) each, for "in vivo" diagnostic use for humans.

(ii) Any person who desires to use the capsules for research involving human subjects shall apply for and receive a specific license pursuant to Rule .02 and Rule .05 of this chapter.

(iii) Any person who desires to manufacture, prepare, process, produce, package, repackage, or transfer for commercial distribution such capsules shall apply for and receive a specific license pursuant to Rule .02 of this chapter.

(iv) Nothing in .02(3)(c)4. relieves persons from complying with applicable FDA, other Federal, and State requirements governing receipt, administration, and use of drugs.

5. Except for persons who manufacture, process, produce, or initially transfer for sale or distribution industrial devices containing byproduct material designed and manufactured for the purpose of detecting, measuring, gauging or controlling thickness, density, level, interface location, radiation, leakage, or qualitative or quantitative chemical composition, or for producing an ionized atmosphere, any person is exempt from the requirements for a license set forth in this Chapter to the extent that such person receives, possesses, uses, transfers, owns, or acquires byproduct material, in these certain detecting, measuring, gauging, or controlling devices and certain devices for producing an ionized atmosphere, and manufactured, processed, produced, or initially transferred in accordance with a specific license issued under Section 32.30 of 10 CFR Part 32, which license authorizes the initial transfer of the device for use under this section. This exemption does not cover sources not incorporated into a device, such as calibration and reference sources.

6. Any person who desires to manufacture, process, produce, or initially transfer for sale or distribution industrial devices containing byproduct material for use under .02(3)(c)5. should apply for a license to the U.S. Nuclear Regulatory Commission pursuant to Section 32.30 of 10

CFR Part 32 and to the U.S. Nuclear Regulatory Commission for a certificate of registration in accordance with §32.210 of 10 CFR, Part 32 .

(4) **Types of Licenses.** Licenses for radioactive materials are of two types: general and specific.

(a) General licenses provided in this Rule are effective without the filing of applications with the Department or the issuance of licensing documents to the particular persons, although the filing of a certificate with the Department may be required by the particular general license. The general licensee is subject to all other applicable portions of this Chapter and any limitations of the general license.

(b) Specific licenses require the submission of an application to the Department and the issuance of a licensing document by the Department to a named person. The licensee is subject to all applicable portions of this Chapter as well as any limitations specified in the licensing document.

(5) **General Licenses - Source Material.**

(a) A general license is hereby issued authorizing persons to hold bare title to source material without regard to quantity. This general license does not authorize any person to receive, possess, use, or transfer source material.

(b) A general license is hereby issued authorizing commercial and industrial firms, research, educational, and medical institutions, and State and local government agencies to use and transfer not more than 15 pounds (6.82 kg) of source material at any one time for research, development, educational, commercial, or operational purposes. A person authorized to use or transfer source material, pursuant to this general license, may not receive more than a total of 150 pounds (68.2 kg) of source material in any one calendar year.

(c) Persons who receive, possess, use, or transfer source material pursuant to the general license in (5)(b) are prohibited from administering source material, or the radiation therefrom, either externally or internally, to human beings except as authorized by the Department in a specific license, and are exempt from the provisions of Rule .03 and Rule .07 of this Chapter to the extent that such receipt, possession, use, or transfer is within the terms of such general license; provided, however, that this exemption shall not be deemed to apply to any such person who is also in possession of source material under a specific license issued pursuant to this Rule.

(d) Depleted Uranium in Industrial Products and Devices.

1. A general license is hereby issued to receive, acquire, possess, use, or transfer, in accordance with the provisions of (5)(d)2., 3., 4., and 5., depleted uranium contained in industrial products or devices for the purpose of providing a concentrated mass in a small volume of the product or device.

2. The general license in (5)(d)1. applies only to industrial products or devices which have been manufactured either in accordance with a specific license issued to the manufacturer of the products or devices in accordance with a specific license issued to the manufacturer by the U.S. Nuclear Regulatory Commission or an Agreement State which authorizes manufacture of the

products or devices for distribution to persons generally licensed by the U.S. Nuclear Regulatory Commission or an Agreement State.

3. Persons who receive, acquire, possess, or use depleted uranium pursuant to the general license established by (5)(d)1. shall:

(i) File Department form "Registration Certificate - Use of Depleted Uranium Under General License" with the Department. The form shall be submitted within 30 days after the first receipt or acquisition of such depleted uranium. The registrant shall furnish on the form the following information and such other information as may be required by that form:

(I) Name and address of the registrant;

(II) A statement that the registrant has developed and will maintain procedures designed to establish physical control over the depleted uranium described in (5)(d)1. and designed to prevent transfer of such depleted uranium in any form, including metal scrap, to persons not authorized to receive the depleted uranium; and

(III) Name and/or title, address, and telephone number of the individual duly authorized to act for and on behalf of the registrant in supervising the procedures identified in (5)(d)3.(i)(II); and

(ii) Report in writing to the Department any changes in information furnished by him in Department form "Registration Certificate - Use of Depleted Uranium Under General License". The report shall be submitted within 30 days after the effective date of such change.

4. A person who receives, acquires, possesses, or uses depleted uranium pursuant to the general license established by (5)(d)1:

(i) Shall not introduce such depleted uranium, in any form, into a chemical, physical, or metallurgical treatment or process, except a treatment or process for repair or restoration of any plating or other covering of the depleted uranium;

(ii) Shall not abandon such depleted uranium;

(iii) Shall transfer or dispose of such depleted uranium only by transfer in accordance with the provisions of (19). In the case where the transferee receives the depleted uranium pursuant to the general license established by (5)(d)1., the transferor shall furnish the transferee a copy of this Regulation and a copy of Department form "Registration Certificate - Use of Depleted Uranium Under General License". In the case where the transferee receives the depleted uranium pursuant to a general license contained in the U.S. Nuclear Regulatory Commission's or Agreement State's regulation equivalent to (5)(d)1., the transferor shall furnish the transferee a copy of this Regulation and a copy of Department form "Registration Certificate - Use of Depleted Uranium Under General License "accompanied by a note explaining that use of the product or device is regulated by the U.S. Nuclear Regulatory Commission or Agreement State under requirements substantially the same as those in this Regulation;

(iv) Shall report in writing to the Department the name and address of the person receiving the depleted uranium pursuant to such transfer within 30 days of any transfer.

5. Any person receiving, acquiring, possessing, using, or transferring depleted uranium pursuant to the general license established by (5)(d)1. is exempt from the requirements of Rule

.03 and Rule .07 of this Chapter with respect to the depleted uranium covered by that general license.

(6) **General Licenses - Radioactive Materials Other Than Source Material.** Each general license issued under (6) has its own specific conditions and requirements.

(a) Ownership of Radioactive Material. A general license is hereby issued to own radioactive material without regard to quantity. Notwithstanding any other provisions of this Rule, this general license does not authorize the manufacture, production, transfer, receipt, possession, or use of radioactive material.

(b) [Reserved]

(c) Certain Detecting, Measuring, Gauging, or Controlling Devices and Certain Devices for Producing Light or an Ionizing Atmosphere.

1. A general license is hereby issued to commercial and industrial firms and to research, educational and medical institutions, individuals in the conduct of their business, and State or local government agencies to own, receive, acquire, possess, use, or transfer, in accordance with the provisions of (6)(c)2., 3., and 4., radioactive material, excluding special nuclear material, contained in devices designed and manufactured for the purpose of detecting, measuring, gauging, or controlling thickness, density, level, interface location, radiation, leakage, or qualitative or quantitative chemical composition, or for producing light or an ionized atmosphere.

2. The general license in (6)(c)1. applies only to radioactive material contained in devices which have been manufactured or initially transferred and labeled in accordance with the specifications contained:

(i) in a specific license issued by the Department pursuant to (11)(d); or

(ii) in accordance with the specifications contained In a specific license issued by the U.S. Nuclear Regulatory Commission, an Agreement State, or a Licensing State, which authorizes distribution of devices to persons generally licensed by the U.S. Nuclear Regulatory Commission, an Agreement State, or a Licensing State.

The devices must have been received from one of the specific licensees described in (i) or (ii) above or through a transfer made under (6)(c)3.(viii).

Note: Regulations under the Federal Food, Drug, and Cosmetic Act authorizing the use of radioactive control devices in food production require certain additional labeling thereon which is found in Section 179.21 of the Code of Federal Regulations, Title 21.

3. Any person who owns, receives, acquires, possesses, uses, or transfers radioactive material in a device pursuant to the general license in (6)(c)1.:

(i) Shall assure that all labels affixed to the device at the time of receipt, and bearing a statement that removal of the label is prohibited, are maintained thereon and shall comply with all instructions and precautions provided by such labels;

(ii) Shall assure that the device is tested for leakage of radioactive material and proper operation of the on/off mechanism and indicator, if any, at no longer than six-month intervals or at such other intervals as are specified in the label; however,

(I) Devices containing only krypton need not be tested for leakage of radioactive material, and

(II) Devices containing only tritium or not more than 100 microcuries (3.7 MBq) of other beta- and/or gamma-emitting material or ten microcuries (0.37 MBq) of alpha-emitting material and devices held in storage in the original shipping container prior to initial installation need not be tested for any purpose;

(iii) Shall assure that the tests required by (6)(c)3.(ii) and other testing, installation, servicing, and removal from installation involving the radioactive material, its shielding or containment, are performed:

(I) In accordance with the instructions provided by the labels, or

(II) By a person holding an applicable specific license from the Department, the U.S. Nuclear Regulatory Commission, an Agreement State, or a Licensing State to perform such activities;

(iv) Shall maintain records showing compliance with the requirements of (6)(c)3.(ii) and (iii). The records shall show the results of tests. The records also shall show the dates of performance of, and the names of persons performing, testing, installation, servicing, and removal from installation concerning the radioactive material, its shielding, or containment. Records of tests for leakage of radioactive material required by (6)(c)3.(ii) shall be maintained for three years after the next required leak test is performed. Records of tests of the on/off mechanism and indicator required by (6)(c)3.(ii) shall be maintained for three years after the next required test of the on/off mechanism and indicator is performed. Records which are required by (6)(c)3.(iii) shall be maintained for three years. In case of transfer or disposal, records required by this paragraph (iv) shall be maintained for three years after the transfer or disposal.

(v) Shall, upon the occurrence of a failure of or damage to, or any indication of a possible failure of or damage to, the shielding of the radioactive material or the on/off mechanism or indicator, or upon the detection of 0.005 microcurie (185 Bq) or more removable radioactive material, immediately suspend operation of the device. The device may not be operated until it has been repaired by the manufacturer or other person holding an applicable specific license from the Department, the U.S. Nuclear Regulatory Commission, an Agreement State, or a Licensing State to repair such devices. The device and any radioactive material from the device may only be disposed of by transfer to a person authorized by an applicable specific license to receive the radioactive material contained in the device or as otherwise approved by the Department. A report containing a brief description of the event and the remedial action taken; and, in the case of detection of 0.005 microcurie (185 Bq) or more of removable radioactive material, or failure or damage to a source likely to result in contamination of the premises or environs, a plan for ensuring that the premises and environs are acceptable for unrestricted use, must be furnished to the Department within 30 days. Under these circumstances, the criteria set out in Rule .03(7)(b) "Radiological requirements for unrestricted use" may be applicable, as determined by the Department on a case-by-case basis;

(vi) Shall not abandon the device containing radioactive material;

(vii) (I) Shall transfer or dispose of the device containing radioactive material only by export as provided in (6)(c)3.(xiv), by transfer to another general licensee as specified in (6)(c)3.(viii) or equivalent regulations of the NRC or another Agreement State, by transfer to a specific licensee of the Department, the U.S. Nuclear Regulatory Commission, an Agreement State, or a Licensing State whose specific license authorizes him to receive the device or authorizes him to collect waste, or as otherwise approved under (6)(c)(3)(vii)(III).

(II) Within 30 days after transfer of a device to a specific licensee or export, the licensee shall furnish to the Department a report containing identification of the device by manufacturer's (or initial transferor's) name, model number, serial number, the name and address and license number (license number not applicable if exported) of the person receiving the device and the date of transfer;

(III) If transfer is to any other licensee not identified in (vii)(I), the licensee shall obtain written approval from the Department before transferring the device to any other person; however, a holder of a specific license may transfer a device for possession and use under its own specific license without prior approval, if, the holder:

I. Verifies that the specific license authorizes the possession and use, or applies for and obtains an amendment to the license authorizing the possession and use;

II. Removes, alters, covers, or clearly and unambiguously augments the existing label (otherwise required by Rule .02(6)(c)3.(i) so that the device is labeled in compliance with Rule .03(12)(d); however the manufacturer, model number, and serial number must be retained;

III. Obtains the manufacturer's or initial transferor's information concerning maintenance that would be applicable under the specific license (such as leak testing procedures); and

IV. Reports the transfer under Rule .02(6)(c)3.(vii)

(viii) Shall transfer the device to another general licensee only:

(I) Where the device remains in use at a particular location. In such case the transferor shall give the transferee a copy of this Regulation and any safety documents identified in the label on the device. Within 30 days of the transfer, report to the Department the manufacturer's (or initial transferor's) name, model number, serial number of the device transferred, the name and mailing address for place of use of the transferee, and the name, title and telephone number of a person identified by the transferee as the individual responsible for having knowledge of and authority to take actions to ensure compliance with the appropriate regulations and requirements; or

(II) Where the device is held in storage by an intermediate person in the original shipping container at its intended location of use prior to initial use by a general licensee;

(ix) Shall comply with the provisions of Rule .03(15) of this Chapter for reporting radiation incidents, or the theft or loss of licensed material, but shall be exempt from the other requirements contained in Rules .03 and .07 of this Chapter;

(x) Shall appoint an individual responsible for having knowledge of the appropriate regulations and requirements and the authority for taking required actions to comply with appropriate

regulations and requirements. The general licensee, through this individual, shall ensure the day-to-day compliance with appropriate regulations and requirements. This appointment does not relieve the general licensee of any of its responsibility in this regard;

(xi) (I) Shall register, in accordance with paragraphs (6)(c)3.(xi)(II) and (III), devices containing at least 10 mCi (370 Mbq) of cesium-137, 0.1 mCi (3.7 MBq) of strontium-90, 1 mCi (37 MBq) of cobalt-60, 0.1 mCi (3.7 MBq) of radium 226, or 1 mCi (37 MBq) of americium-241 or any other transuranic [i.e., element with atomic number greater than uranium (92)], based on the activity indicated on the label. Each address for a location of use, as described under paragraph 3.(xi)(III)IV. of this section, represents a separate general licensee and requires a separate registration.

(II) If in possession of a device meeting the criteria of paragraph (6)(c)3.(xi)(I), shall register these devices annually with the Department. Registration must be done by verifying, correcting, and/or adding to the information provided in a request for registration received from the Department. The registration information must be submitted to the Department within 30 days of the date of the request for registration or as otherwise indicated in the request. In addition, a general licensee holding devices meeting the criteria of (6)(c)3.(xi)(I) is subject to the bankruptcy notification requirement in (13)(e) of this rule.

(III) In registering devices, the general licensee shall furnish the following information and any other information specifically requested by the Department;

I. Name and mailing address of the general licensee.

II. Information about each device: the manufacturer (or initial transferor), model number, serial number, the radioisotope and activity (as indicated on the label).

III. Name, title, and telephone number of the responsible person designated as a representative of the general licensee under (6)(c)3.(x).

IV. Address or location at which the device(s) are used and/or stored.

V. Certification by the responsible representative of the general licensee that the information concerning the device(s) has been verified through a physical inventory and checking of label information.

VI. Certification by the responsible representative of the general licensee that they are aware of the requirements of the general license.

(IV) Persons generally licensed by the NRC, an Agreement State, or Licensing State are not eligible for reciprocity.

(xii) Shall report changes to the mailing address for the location of use (including change in name of general licensee) to the Department within 30 days of the effective date of the change;

(xiii) May not hold devices that are not in use for longer than two years. If devices with shutters are not being used, the shutter must be locked in the closed position. The testing required by (6)(c)3.(ii) need not be performed during the period of storage only. However, when devices are put back into service or transferred to another person, and have not been tested within the required test interval, they must be tested for leakage before use or transfer and the shutter

tested before use. Devices kept in standby for future use are excluded from the two-year time limit if the general licensee performs quarterly physical inventories of these devices while they are in standby.

(xiv) Shall not export the device containing byproduct material except in accordance with the requirements of 10 CFR Part 110.

(xv) Shall respond to written requests from the Program to provide information relating to the general license within 30 calendar days of the date of the request, or other time specified in the request. If the general licensee cannot provide the requested information within the allotted time, it shall, within that same time period, request a longer period to supply the information by providing the Program a written justification for the request.

4. The general license in (6)(c)1. does not authorize the manufacture or import of devices containing radioactive material.

5. The general license provided in (6)(c)1. is subject to the provisions of (13), (18), and (19) of this rule, of paragraphs (4), (5), (6), (7), (8), (9) and (10) of Rule .01, and of Rule .06 of this Chapter.

(d) Luminous Safety Devices for Aircraft.

1. A general license is hereby issued to own, receive, acquire, possess, and use tritium or promethium-147 contained in luminous safety devices for use in aircraft, provided:

(i) Each device contains not more than ten Curies (370 GBq) of tritium or 300 millicuries (11.1 GBq) of promethium-147; and

(ii) Each device has been manufactured, assembled, or imported in accordance with a specific license issued by the U.S. Nuclear Regulatory Commission, or each device has been manufactured or assembled in accordance with the specifications contained in a specific license issued by the Department or any Agreement State to the manufacturer or assembler of such device pursuant to licensing requirements equivalent to those in Section 32.53 of 10 CFR, Part 32, of the regulations of the U.S. Nuclear Regulatory Commission.

2. Persons who own, receive, acquire, possess, or use luminous safety devices pursuant to the general license in (6)(d) are exempt from the requirements of Rules .03 and .07 of this Chapter, except that they shall comply with the provisions of Rule .03(15) of this Chapter.

3. This general license does not authorize the manufacture, assembly, or repair of luminous safety devices containing tritium or promethium-147.

4. This general license does not authorize the ownership, receipt, acquisition, possession, or use of promethium-147 contained in instrument dials.

5. This general license is subject to the provisions of paragraphs (13), (18), and (19) of this Rule, of paragraphs (4), (5), (6), (7), (8), (9) and (10) of Rule .01, and of Rule .06 of this Chapter.

(e) Ice-Detection Devices.

1. A general license is hereby issued to own, receive, acquire, possess, use, and transfer strontium-90 contained in ice-detection devices, provided each device contains not more than 50 microcuries (1.85 MBq) of strontium-90 and each device has been manufactured or imported in accordance with a specific license issued by the U.S. Nuclear Regulatory Commission or each device has been manufactured in accordance with the specifications contained in a specific license issued by the Department or any Agreement State to the manufacturer of such device pursuant to licensing requirements equivalent to those in Section 32.61 of 10 CFR, Part 32, of the regulations of the U.S. Nuclear Regulatory Commission.

2. Persons who own, receive, acquire, possess, use, or transfer strontium-90 contained in ice-detection devices pursuant to the general license in (6)(e)1.:

(i) Shall, upon occurrence of visually observable damage, such as a bend or crack or discoloration from overheating to the device, discontinue use of the device until it has been inspected, tested for leakage, and repaired by a person holding a specific license or equivalent licensing document from the U.S. Nuclear Regulatory Commission or an Agreement State to manufacture or service such devices; or shall dispose of the device pursuant to the provisions of Rule .03(13) of this Chapter;

(ii) Shall assure that all labels affixed to the device at the time of receipt and which bear a statement that prohibits removal of the labels are maintained thereon; and

(iii) Are exempt from the requirements of Rules .03 and .07 of this Chapter except that such persons shall comply with the provisions of Rule .03(13) and (15) of this Chapter.

3. This general license does not authorize the manufacture, assembly, disassembly, or repair of strontium-90 in ice-detection devices.

4. This general license is subject to the provisions of paragraphs (13), (18), and (19) of this Rule, of paragraphs (4), (5), (6), (7), (8), (9) and (10) of Rule .01, and of Rule .06 of this Chapter.

(f) Calibration and Reference Sources.

1. A general license is hereby issued to those persons listed below to own, receive, acquire, possess, use, and transfer, in accordance with the provisions of (6)(f)4. and 5., americium-241 in the form of calibration or reference sources:

(i) Any person who holds a specific license issued by the Department which authorizes him to receive, possess, use, and transfer radioactive material; and

(ii) Any person who holds a specific license issued by the U.S. Nuclear Regulatory Commission which authorizes him to receive, possess, use, and transfer special nuclear material.

2. A general license is hereby issued to own, receive, possess, use, and transfer plutonium in the form of calibration or reference sources in accordance with the provisions of (6)(f)4. and 5. to any person who holds a specific license issued by the Department which authorizes him to receive, possess, use, and transfer radioactive material.

3. A general license is hereby issued to own, receive, possess, use, and transfer radium-226 in the form of calibration or reference sources in accordance with the provisions of (6)(f)4. and 5.

to any person who holds a specific license issued by the Department which authorizes him to receive, possess, use, and transfer radioactive material.

4. The general licenses in (6)(f)1., 2., and 3. apply only to calibration or reference sources which have been manufactured in accordance with the specifications contained in a specific license issued to the manufacturer or importer of the sources by the U.S. Nuclear Regulatory Commission pursuant to Section 32.57 of 10 CFR, Part 32, or Section 70.39 of 10 CFR, Part 70, or which have been manufactured in accordance with the specifications contained in a specific license issued to the manufacturer by the Department, any Agreement State, or Licensing State pursuant to licensing requirements equivalent to those contained in Section 32.57 of 10 CFR, Part 32, or Section 70.39 of 10 CFR, Part 70, of the regulations of the U.S. Nuclear Regulatory Commission.

5. The general licenses provided in (6)(f)1., 2., and 3. are subject to the provisions of paragraphs (13), (18), and (19) of this Rule, of paragraphs (4), (5), (6), (7), (8), (9) and (10) of Rule .01, and of Rules .03, .06, and .07 of this Chapter. In addition, persons who own, receive, acquire, possess, use, or transfer one or more calibration or reference sources pursuant to these general licenses:

(i) Shall not possess at any one time, at any one location of storage or use, more than five microcuries (185 kBq) of americium-241, five microcuries (185 kBq) of plutonium, or five microcuries (185 kBq) of radium-226 in such sources;

(ii) Shall not receive, possess, use, or transfer such source unless the source, or the storage container, bears a label that includes one of the following statements, as appropriate, or a substantially similar statement that contains the information called for in one of the following statements, as appropriate:

(I) The receipt, possession, use, and transfer of this source, Model _____, Serial No. _____, are subject to a general license and the regulations of the U.S. Nuclear Regulatory Commission or of a State with which the U.S. Nuclear Regulatory Commission has entered into an agreement for the exercise of regulatory authority. Do not remove this label.

CAUTION - RADIOACTIVE MATERIAL -
THIS SOURCE CONTAINS (AMERICIUM-241)*
(PLUTONIUM)*. DO NOT TOUCH RADIOACTIVE PORTION OF THIS SOURCE.

_____
(NAME OF MANUFACTURER OR IMPORTER)

*Note: Showing only the name of the appropriate material, i.e., either plutonium or americium.

(II) The receipt, possession, use, and transfer of this source, Model _____, Serial No. _____, are subject to a general license and the regulations of a Licensing State. Do not remove this label.

CAUTION - RADIOACTIVE MATERIAL -
THIS SOURCE CONTAINS RADIUM-226.
DO NOT TOUCH RADIOACTIVE PORTION OF THIS SOURCE.

_____
(NAME OF MANUFACTURER OR IMPORTER)

(iii) Shall not transfer, abandon, or dispose of such source except by transfer to a person authorized by a license from the Department, the U.S. Nuclear Regulatory Commission, an Agreement State, or a Licensing State to receive the source;

(iv) Shall store such source, except when the source is being used, in a closed container adequately designed and constructed to contain americium-241, plutonium, or radium-226 which might otherwise escape during storage; and

(v) Shall not use such source for any purpose other than the calibration of radiation detectors or the standardization of other sources.

6. These general licenses do not authorize the manufacture of calibration or reference sources containing americium-241, plutonium, or radium-226.

(g) General License for Use of Radioactive Material for Certain In Vitro Clinical or Laboratory Testing.

Note: The new drug provisions of the Federal Food, Drug, and Cosmetic Act also govern the availability and use of any specified diagnostic drugs in interstate commerce.

1. A general license is hereby issued to any physician, veterinarian in the practice of veterinary medicine, clinical laboratory, or hospital to receive, acquire, possess, transfer, or use, for any of the following radioactive material, in accordance with the provisions of (6)(g) 2., 3., 4., 5., and 6., the following radioactive materials in prepackaged units for use in in-vitro clinical or laboratory tests not involving internal or external administration of radioactive material, or the radiation therefrom, to human beings or animals:

(i) Iodine-125, in units not exceeding ten microcuries (370 kBq) each.

(ii) Iodine-131, in units not exceeding ten microcuries (370 kBq) each.

(iii) Carbon-14, in units not exceeding ten microcuries (370 kBq) each.

(iv) Hydrogen-3 (tritium), in units not exceeding 50 microcuries (1.85 MBq) each.

(v) Iron-59, in units not exceeding 20 microcuries (740 kBq) each.

(vi) Cobalt-57, in units not exceeding ten microcuries (370 kBq) each.

(vii) Selenium-75, in units not exceeding ten microcuries (370 kBq) each.

(viii) Mock Iodine-125 reference or calibration sources, in units not exceeding 0.05 microcurie (1.85 kBq) of iodine-129 and 0.005 microcurie (185 Bq) of americium-241 each.

2. No person shall receive, acquire, possess, use, or transfer radioactive material pursuant to the general license established by (6)(g)1. until he has filed Department form, "Certificate – In-Vitro Testing with Radioactive Material Under General License" with the Department and received from the Department a validated copy of this form with certification number assigned or until he has been authorized pursuant to (9)(e)3. to use radioactive material under the general license in (6)(g). The physician, veterinarian in the practice of veterinary medicine, clinical

laboratory, or hospital shall furnish on the form the following information and such other information as may be required by that form:

(i) Name and address of the physician, veterinarian in the practice of veterinary medicine, clinical laboratory, or hospital;

(ii) The location of use; and

(iii) A statement that the physician, veterinarian in the practice of veterinary medicine, clinical laboratory, or hospital has appropriate radiation measuring instruments to carry out in vitro clinical or laboratory tests with radioactive material as authorized under the general license in (6)(g)1. and that such tests will be performed only by personnel competent in the use of such instruments and in the handling of the radioactive material.

3. A person who receives, acquires, possesses, or uses radioactive material pursuant to the general license established by (6)(g)1. shall comply with the following:

(i) The general licensee shall not possess at any one time, pursuant to the general license in (6)(g)1., at any one location of storage or use, a total amount of iodine-125, iodine-131, selenium-75, iron-59, and/or cobalt-57 in excess of 200 microcuries (7.4 MBq).

(ii) The general licensee shall store the radioactive material, until used, in the original shipping container or in a container providing the equivalent amount of radiation protection.

(iii) The general licensee shall use the radioactive material only as authorized by (6)(g)1.

(iv) The general licensee shall not transfer the radioactive material to a person who is not authorized to receive it pursuant to a license issued by the Department, the U.S. Nuclear Regulatory Commission, any Agreement State, or Licensing State, nor transfer the radioactive material in any manner other than in the unopened, labeled shipping container as received from the supplier.

(v) The general licensee shall dispose of the Mock Iodine-125 reference or calibration sources described in (6)(g)1.(viii) as required by Rule .03(13) of this Chapter.

4. The general licensee shall not receive, acquire, possess, or use radioactive material pursuant to (6)(g)1.:

(i) Except as prepackaged units which are labeled in accordance with the provisions of an applicable specific license issued pursuant to (11)(g) or in accordance with the provisions of a specific license issued by the U.S. Nuclear Regulatory Commission, any Agreement State, or Licensing State which authorizes the manufacture and distribution of iodine-125, iodine-131, carbon-14, hydrogen-3 (tritium), iron-59, selenium-75, cobalt-57, or Mock Iodine-125 to persons generally licensed under (6)(g) or its equivalent, and

(ii) Unless one of the following statements, as appropriate, or a statement which contains the information called for in one of the following statements, appears on a label affixed to each prepackaged unit or appears in a leaflet or brochure which accompanies the package:

(I) This radioactive material shall be received, acquired, possessed, and used only by physicians, veterinarians in the practice of veterinary medicine, clinical laboratories, or hospitals

and only for in vitro clinical or laboratory tests not involving internal or external administration of the material, or the radiation therefrom, to human beings or animals. Its receipt, acquisition, possession, use, and transfer are subject to the regulations and a general license of the U.S. Nuclear Regulatory Commission or of a State with which the Commission has entered into an agreement for the exercise of regulatory authority.

_____
(NAME OF MANUFACTURER)

(I) This radioactive material shall be received, acquired, possessed, and used only by physicians, veterinarians in the practice of veterinary medicine, clinical laboratories, or hospitals and only for in vitro clinical or laboratory tests not involving internal or external administration of the material, or the radiation therefrom, to human beings or animals. Its receipt, acquisition, possession, use, and transfer are subject to the regulations and a general license of a Licensing State.

_____
(NAME OF MANUFACTURER)

5. The physician, veterinarian in the practice of veterinary medicine, clinical laboratory, or hospital possessing or using radioactive material under the general license of (6)(g)1. shall report in writing to the Department any changes in the information furnished by him in the "Certificate - In Vitro Testing with Radioactive Material Under General License". The report shall be furnished within 30 days after the effective date of such change.

6. Any person using radioactive material pursuant to the general license of (6)(g)1. is exempt from the requirements of Rules .03 and .07 of this Chapter with respect to radioactive material covered by that general license, except that such persons using the Mock Iodine-125 described in (6)(g)1.(viii) shall comply with the provisions of (13) and (15) of Rule .03 of this Chapter.

(7) **Filing Application for Specific Licenses.**

(a) Applications for specific licenses shall be filed on forms supplied by the Georgia Department of Natural Resources, Radioactive Materials Program, 4220 International Parkway, Suite 100, Atlanta, Georgia, 30354, or current mailing address. The application shall set forth all applicable information called for by the form.

(b) The Department may at any time after the filing of the original application, and before the expiration of the license, require further statements in order to enable the Department to determine whether the application should be granted or denied or whether a license should be modified or revoked.

(c) Each application shall be signed by the applicant or person duly authorized to act for and on his behalf.

(d) An application for a license may include a request for a license authorizing one or more activities.

(e) In his application, the applicant may incorporate, by reference, information contained in previous applications, statements, or reports filed with the Department, provided that such references are clear and specific by page, paragraph, and date.

(f) Applications and documents submitted to the Department may be made available for public inspection except those documents described in Rule .01 (5)(c) which may be withheld from public inspection or discovery.

(g) The Department may verify information contained in applications and secure additional information deemed necessary to make a reasonable determination as to whether to issue a license and whether special conditions should be attached thereto by visiting the facility or location where radioactive materials would be possessed, or used, and by discussing details of proposed possession or use of the radioactive materials with the applicant or the applicant's designated representatives.

(h) Emergency Plan for Large Quantity Users.

1. Each application to possess radioactive materials in unsealed form, on foils or plated sources, or sealed in glass in excess of the quantities specified in (21)(e), Schedule E, must contain either:

(i) An evaluation showing that the maximum dose to a person offsite due to a release of radioactive materials would not exceed one rem (.01 Sv) effective dose equivalent or five rems (.05 Sv) to the thyroid; or

(ii) An emergency plan for responding to a release of radioactive material.

2. One or more of the following factors may be used to support an evaluation submitted under (7)(h)1.(i):

(i) The radioactive material is physically separated so that only a portion could be involved in an accident;

(ii) All or part of the radioactive material is not subject to release during an accident because of the way it is stored or packaged;

(iii) The release fraction in the respirable size range would be lower than the release fraction shown in (21)(e), Schedule E, due to the chemical or physical form of the material;

(iv) The solubility of the radioactive material would reduce the dose received;

(v) Facility design or engineered safety features in the facility would cause the release fraction to be lower than shown in (21)(e), Schedule E;

(vi) Operating restrictions or procedures would prevent a release fraction as large as that shown in (21)(e), Schedule E; or

(vii) Other factors appropriate for the specific facility.

3. An emergency plan for responding to a release of radioactive material submitted under (7)(h)1.(ii) must include the following information:

(i) Facility description - a brief description of the licensee's facility and the area near the site.

(ii) Types of accidents - an identification of each type of radioactive materials accident for which protective actions may be needed.

(iii) Classification of accidents - a classification system for classifying accidents as alerts or site area emergencies.

(iv) Detection of accidents - identification of the means of detecting each type of accident in a timely manner.

(v) Mitigation of consequences - a brief description of the means and equipment for mitigating the consequences of each type of accident, including those provided to protect workers on site, and a description of the program for maintaining the equipment.

(vi) Assessment of releases - a brief description of the methods and equipment to assess releases of radioactive materials.

(vii) Responsibilities - a brief description of the responsibilities of licensee personnel should an accident occur, including identification of personnel responsible for promptly notifying offsite response organizations and the Department; also responsibilities for developing, maintaining, and updating the plan.

(viii) Notification and coordination - a commitment to and a brief description of the means to promptly notify offsite response organizations and request offsite assistance, including medical assistance for the treatment of contaminated injured onsite workers when appropriate. A control point must be established to prevent spreading of contamination during recovery activities. The notification and coordination must be planned so that unavailability of some personnel, parts of the facility, and some equipment will not prevent the notification and coordination. The licensee shall also commit to notify the Department immediately after notification of the appropriate offsite response organizations and not later than one hour after the licensee declares an emergency.

Note: This Chapter does not supersede or release licensees from complying with the requirements under the Emergency Planning and Community Right-to-Know Act of 1986, Title III, Pub. L-99-499 or other State or Federal reporting requirements.

(ix) Information to be communicated - a brief description of the types of information on facility status, radioactive releases, and recommended protective actions, if necessary, to be given to offsite response organizations and to the Department.

(x) Training - a brief description of the frequency, performance objectives, and plans for the training that the licensee will provide workers on how to respond to an emergency, including any special instruction and orientation tours the licensee would offer to fire, police, medical, and other emergency personnel. The training shall familiarize personnel with site-specific emergency procedures. Also, the training shall thoroughly prepare site personnel for their responsibilities in the event of accident scenarios postulated as most probable for the specific site, including the use of team training for such scenarios.

(xi) Safe shutdown - a brief description of the means of restoring the facility to a safe condition after an accident.

(xii) Exercises - provisions for conducting quarterly communications checks with offsite response organizations and biennial onsite exercises to test response to simulated emergencies. Quarterly communications checks with offsite response organizations must include the check and update of all necessary telephone numbers. The licensee shall invite offsite response organizations to participate in the biennial exercises. Participation of offsite response organizations in biennial exercises, although recommended, is not required. Exercises must use accident scenarios postulated as most probable for the specific site, and the scenarios shall not be known to most exercise participants. The licensee shall critique each exercise using individuals not having direct implementation responsibility for the plan. Critiques of exercises must evaluate the appropriateness of the plan, emergency procedures, facilities, equipment, training of personnel, and the overall effectiveness of the response. These exercises must be documented and deficiencies found by the critiques must be corrected.

(xiii) Hazardous chemicals - a certification that the applicant has met its responsibilities under the Emergency Planning and Community Right-to-Know Act of 1986, Title III, Pub. L.99-499, if applicable to the applicant's activities at the proposed place of use of the radioactive material.

4. The licensee shall allow the offsite response organizations expected to respond in case of an accident 60 days to comment on the licensee's emergency plan before submitting it to the Department. The licensee shall provide any comments received within the 60 days to the Department with the emergency plan.

(i) Except as provided in paragraphs 2., 3. and 4. of this section, an application for a specific license to use radioactive material in the form of a sealed source or in a device that contains the sealed source must:

1. Identify the source or device by manufacturer and model number as registered with the Nuclear Regulatory Commission, an Agreement State, or for a source or a device containing radium-226 or accelerator produced radioactive material with a State under provisions comparable to Section 32.210 of 10 CFR Part 32;

2. For sources or devices manufactured before October 23, 2012, that are not registered with the Commission under Section 32.210 of 10 CFR, Part 32 or with an Agreement State, and for which the applicant is unable to provide all categories of information specified in Section 32.210(c) of 10 CFR, Part 32, the application must include:

(i) All available information identified in Section 32.210(c) of 10 CFR, Part 32 concerning the source, and, if applicable, the device; and

(ii) Sufficient additional information to demonstrate that there is reasonable assurance that the radiation safety properties of the source or device are adequate to protect health and minimize danger to life and property. Such information must include a description of the source or device, a description of radiation safety features, the intended use and associated operating experience, and the results of a recent leak test.

3. For sealed sources and devices allowed to be distributed without registration of safety information in accordance with Section 32.210(g)(1) of 10 CFR, Part 32, the applicant may supply only the manufacturer, model number, and radionuclide and quantity.

4. If it is not feasible to identify each sealed source and device individually, the applicant may propose constraints on the number and type of sealed sources and devices to be used and the conditions under which they will be used, in lieu of identifying each sealed source and device.

(j) An application from a medical facility, educational institution, or Federal facility to produce Positron Emission Tomography (PET) radioactive drugs for noncommercial transfer to licensees in its consortium authorized for medical use under Rule .05 or equivalent Nuclear Regulatory Commission or Agreement State requirements shall include:

1. A request for authorization for the production of PET radionuclides or evidence of an existing license issued under Rule .02, Nuclear Regulatory Commission or of this chapter or Agreement State requirements for a PET radionuclide production facility within its consortium from which it receives PET radionuclides.

2. Evidence that the applicant is qualified to produce radioactive drugs for medical use by meeting one of the criteria in .02(11)(i)2. of this Rule.

3. Identification of individual(s) authorized to prepare the PET radioactive drugs if the applicant is a pharmacy, and documentation that each individual meets the requirements of an authorized nuclear pharmacist as specified in .02(11)(i)5. of this Rule.

4. Information identified in Rule .02(11)(i)3. of this Rule on the PET drugs to be noncommercially transferred to members of its consortium.

(8) **General Requirements for the Issuance of Specific Licenses.** A license application will be approved if the Department determines the following:

(a) That the applicant is qualified by reason of training and experience to use the material in question for the purpose requested in accordance with this Chapter in such a manner as to minimize danger to public health and safety or property;

(b) That the applicant's proposed equipment, facilities, and procedures are adequate to minimize danger to public health and safety or property;

(c) That the issuance of the license will not be inimical to the health and safety of the public; and

(d) That the applicant satisfies any applicable special requirements in (9), (10), and (11).

(e) Bonding Requirements.

1. Pursuant to Georgia Laws 1979, pp. 1059, 1060, a specific license will be issued to a Major Processor as defined in Rule .01(2) of this Chapter only if the applicant has posted a surety bond with, and made payable to, the Commissioner, Department of Natural Resources, to ensure the protection of the public health and safety in the event of abandonment, insolvency, or other inability of the licensee to meet the requirements of the Act and this Chapter.

(i) The bond provided shall be not less than $100,000.00, nor more than $5,000,000.00.

(ii) The exact amount of the bond shall be determined by the Director, Environmental Protection Division, and shall be based on the probable extent of contamination, the amount of possible

property damage, the costs of removal and disposal of sources of radiation used by the licensee, and the costs of reclamation of the property in the event of abandonment, insolvency, or other inability of the licensee to perform such services to the satisfaction of the Department.

2. Persons licensed at the time the bonding requirements of this Chapter became effective, and upon notice by the Department, must, within a period of 90 days following such notice, provide the bond required by (8)(e)1. as a condition for continuation of the license.

(f) Environmental Report, Commencement of Construction. In the case of an application for a license to receive and possess radioactive material for the conduct of any activity which the Department determines will significantly affect the quality of the environment, commencement of construction of the plant or facility in which the activity will be conducted shall not begin until the Department has concluded, after weighing the environmental, economic, technical, and other benefits against environmental costs and considering available alternatives, that the action called for is the issuance of the proposed license, with any appropriate conditions to protect environmental values. Commencement of construction prior to such conclusion shall be grounds for denial of a license to receive and possess radioactive material in such plant or facility. As used in this paragraph, the term "commencement of construction" means any clearing of land, excavation, or other substantial action that would adversely affect the environment of a site. The term does not mean site exploration, necessary borings to determine foundation conditions, or other preconstruction monitoring or testing to establish background information related to the suitability of the site or the protection of environmental values.

(g) Financial assurance and record-keeping for decommissioning.

1. The following are required to furnish financial assurance and record-keeping for decommissioning:

(i) Each applicant for a specific license authorizing the possession and use of unsealed radioactive material of half-life greater than 120 days and in quantities exceeding 10^5 times the applicable quantities set forth in Schedule F shall submit a decommissioning funding plan as described in (8)(g)5. The decommissioning funding plan must also be submitted when a combination of isotopes is involved if R divided by 10^5 is greater than 1 (unity Rule), where R is defined here as the sum of the ratios of the quantity of each isotope to the applicable value in Schedule F.

(ii) Each applicant for a specific license authorizing the possession and use of sealed sources or plated foils of half-life greater than 120 days and in quantities exceeding 10^{12} times the applicable quantities set forth in Schedule F shall submit a decommissioning funding plan as described in (8)(g)5. The decommissioning funding plan must also be submitted when a combination of isotopes is involved if R divided by 10^{12} is greater than 1 (unity Rule), where R is defined here as the sum of the ratios of the quantity of each isotope to the applicable value in Schedule F.

2. Each applicant for a specific license authorizing the possession and use of radioactive material of half-life greater than 120 days and in quantities specified in (8)(g)4. shall either:

(i) Submit a decommissioning funding plan as described in (8)(g)5.; or

(ii) Submit a certification that financial assurance for decommissioning has been provided in the amount prescribed by (8)(g)4. using one of the methods described in (8)(g)6. For an applicant,

this certification may state that the appropriate assurance will be obtained after the application has been approved and the license issued but prior to the receipt of licensed material. As part of the certification, a copy of the financial instrument obtained to satisfy the requirements of (8)(g)6. is to be submitted to the Department. If the applicant defers execution of the financial instrument until after the license has been issued, a signed original of the financial instrument obtained to satisfy the requirements (8)(g)6. must be submitted to the Department before the receipt of licensed material. If the applicant does not defer execution of the financial instrument, the applicant shall submit to the Department, as part of the certification a signed original of the financial instrument obtained to satisfy the requirements of (8)(g)6.

3. (i) Each holder of a specific license issued on or after January 1, 1993, which is of a type described in (8)(g)1. or 2. shall provide financial assurance for decommissioning in accordance with the criteria set forth in this Rule.

(ii) Each holder of a specific license issued before January 1, 1993, which is of a type described in (8)(g)1. shall submit, on or before January 1, 1993, a decommissioning funding plan or a certification of financial assurance for decommissioning in an amount at least equal to $1,125,000 in accordance with the criteria set forth in this Rule. If the licensee submits the certification of financial assurance rather than a decommissioning funding plan at this time, the licensee shall include a decommissioning funding plan in any application for license renewal.

(iii) Each holder of a specific license issued before January 1, 1993, and of a type described in (8)(g)2. shall submit, on or before January 1, 1993, a certification of financial assurance for decommissioning or a decommissioning funding plan in accordance with the criteria set forth in this .02(8)(g).

(iv) Waste collectors and waste processors shall provide financial assurance in an amount based on a decommissioning funding plan as described in .02(8)(g)5. The decommissioning funding plan must also include the cost of disposal of the maximum amount (curies) of radioactive material permitted by the license, and the cost of disposal of the maximum quantity, by volume, of radioactive material that could be present at the licensee's facility at any time, in addition to the cost to remediate the licensee's site to meet the license termination requirements in .02(18).

4. Table of required amounts of financial assurance for decommissioning by quantity of material.

Greater than 10^4 but less than or equal to 10^5 times the applicable quantities of Schedule F in unsealed form. (For a combination of isotopes, if R, as defined in (8)(g), divided by 10^4 is greater than 1 but R divided by 10^5 is less than or equal to 1): $1,125,000

Greater than 10^3 but less than or equal to 10^4 times the applicable quantities of Schedule F in unsealed form. (For a combination of isotopes, if R, as defined in (8)(g), divided by 10^3 is greater than 1 but R divided by 10^4 is less than or equal to 1): $225,000

Greater than 10^{10} times the applicable quantities of Schedule F in sealed sources or plated foils. (For a combination of isotopes, if R, as defined in (8)(g), divided by 10^{10} is greater than 1): $113,000

5. Each decommissioning funding plan must contain a cost estimate for decommissioning and a method of assuring funds for decommissioning from (8)(g)6., including means of adjusting

cost estimates and associated funding levels periodically over the life of the facility. Cost estimates must be adjusted at intervals not to exceed three (3) years. The decommissioning funding plan must also contain a certification by the licensee that financial assurance for decommissioning has been provided in the amount of the cost estimate for decommissioning.

6. Financial assurance for decommissioning must be provided by one or more of the following methods:

(i) Prepayment. Prepayment is the deposit prior to the start of operation into an account segregated from licensee assets and outside the licensee's administrative control of cash or liquid assets such that the amount of funds would be sufficient to pay decommissioning costs. Prepayment may be in the form of a trust, escrow account, government fund, certificate of deposit, or deposit of government securities.

(ii) A surety method, insurance, or other guarantee method. These methods guarantee that decommissioning costs will be paid. A surety method may be in the form of a surety bond, letter of credit, or line of credit. A parent company guarantee of funds for decommissioning costs based on a financial test may be used if the guarantee and test are as contained in (21)(d) Schedule D. A parent company guarantee may not be used in combination with other financial methods to satisfy the requirements of this section. For commercial corporations that issue bonds, a guarantee of funds by the applicant or licensee for decommissioning costs based on a financial test may be used if the guarantee and test are as contained in (21)(g) Schedule G. For commercial companies that do not issue bonds, a guarantee of funds by the applicant or licensee for decommissioning: costs may be used if the guarantee and test are as contained in (21)(d) Schedule D. For nonprofit entities, such as colleges, universities, and nonprofit hospitals, a guarantee of funds by the applicant or licensee may be used if the guarantee and test are as contained in (21)(h) Schedule H. A guarantee by the applicant or licensee may not be used in combination with any other financial methods used to satisfy the requirements of this section or in any situation where the applicant or licensee has a parent company holding majority control of the voting stock of the company. Any surety method or insurance used to provide financial assurance for decommissioning must contain the following conditions:

(I) The surety method or insurance must be open-ended or, if written for a specified term, such as five years, must be renewed automatically, unless 90 days or more prior to the renewal date the issuer notifies the Department, the beneficiary, and the licensee of its intention not to renew. The surety method or insurance must also provide that the full face amount be paid to the beneficiary automatically prior to the expiration without proof of forfeiture if the licensee fails to provide a replacement acceptable to the Department within 30 days after receipt of notification of cancellation.

(II) The surety method or insurance must be payable to a trust established for decommissioning costs. The trustee and trust must be acceptable to the Department. An acceptable trustee includes an appropriate State or Federal government agency or an entity which has the authority to act as a trustee and whose trust operations are regulated and examined by a Federal or State agency.

(III) The surety method or insurance must remain in effect until the Department has terminated the license.

(iii) An external sinking fund in which deposits are made at least annually, coupled with a surety method or insurance, the value of which may decrease by the amount being accumulated in the

sinking fund. An external sinking fund is a fund established and maintained by setting aside funds periodically in an account segregated from licensee assets and outside the licensee's administrative control in which the total amount of funds would be sufficient to pay decommissioning costs at the time termination of operation is expected. An external sinking fund may be in the form of a trust, escrow account, government fund, certificate of deposit, or deposit of government securities. The surety or insurance provisions must be as stated in (8)(g)2.

(iv) In the case of Federal, State, or local government licensees, a statement of intent containing a cost estimate for decommissioning or an amount based on the Table in (8)(g)4., and indicating that funds for decommissioning will be obtained when necessary.

7. Each person licensed under this Chapter shall keep records of information important to the safe and effective decommissioning of the facility in an identified location until the site is released for unrestricted use by the Department. Before licensed activities are transferred or assigned in accordance with .02(13)(b), licensees shall transfer all records described in (7)(i) through (iv) to the new licensee. In this case, the new licensee will be responsible for maintaining these records until the license is terminated. If records of relevant information to the decommissioning of a facility are kept for other purposes, references to these records and their locations may be used. Information the Department considers important to decommissioning consists of:

(i) Records of spills or other unusual occurrences involving the spread of contamination in and around the facility, equipment, or site. These records may be limited to instances when contamination remains after any cleanup procedures or when there is reasonable likelihood that contaminants may have spread to inaccessible areas as in the case of possible seepage into porous materials such as concrete. These records must include any known information on identification of involved nuclides, quantities, forms, and concentrations.

(ii) As-built drawings and modifications of structures and equipment in restricted areas where radioactive materials are used and/or stored, and of locations of possible inaccessible contamination such as buried pipes which may be subject to contamination. If required drawings are referenced, each relevant document need not be indexed individually. If drawings are not available, the licensee shall substitute appropriate records of available information concerning these areas and locations.

(iii) Except for areas containing only sealed sources (provided the sources have not leaked or no contamination remains after any leak) or radioactive materials having only half-lives of less than 65 days, or depleted uranium used only for shielding or as penetrators in unused munitions, a list contained in a single document and updated every two years, of the following:

(I) All areas designated and formerly designated as restricted areas as defined under Rule 391-3-17-.01(2);

(II) All areas outside of restricted areas that require documentation under (8)(g)7.(i);

(III) All areas outside of restricted areas where current and previous wastes have been buried as documented under Rule .03(14)(i) of this Chapter; and

(IV) All areas outside of restricted areas that contain materials such that, if the license expired, the licensee would be required to either decontaminate the area to unrestricted release levels or apply for approval for disposal under Rule .03(13)(b) of this Chapter.

(iv) Records of the cost estimate performed for the decommissioning funding plan or of the amount certified for decommissioning, and records of the funding method used for assuring funds if either a funding plan or certification is used.

8. Teletherapy licensees are exempted from decommissioning financial assurance requirements for possession of licensed material in sealed sources in quantities greater than 10^{10} times the applicable quantities of Schedule F of this rule, for the purpose of source changes only. This exemption is granted for no more than 30 days for any one source change.

(h) Expiration and termination of licenses and decommissioning of sites and separate buildings or outdoor areas.

1. Each specific license continues in effect, beyond the expiration date if necessary, with respect to possession of radioactive material until the Department notifies the licensee in writing that the license is terminated. During this time, the licensee shall:

(i) Limit actions involving radioactive material to those related to decommissioning; and

(ii) Continue to control entry to restricted areas until they are suitable for release in accordance with Department requirements.

2. Within 60 days of the occurrence of any of the following, each licensee shall provide notification to the Department in writing of such occurrence, and either begin decommissioning its site, or any separate building or outdoor area that contains residual radioactivity so that the building or outdoor area is suitable for release in accordance with Department requirements, or submit within 12 months of notification a decommissioning plan, if required by (8)(h)5.(i), and begin decommissioning upon approval of that plan if:

(i) The license has expired pursuant to (14) or (18)(c); or

(ii) The licensee has decided to permanently cease principal activities, as defined in this part, at the entire site or in any separate building or outdoor area that contains residual radioactivity such that the building or outdoor area is unsuitable for release in accordance with Department requirements; or

(iii) No principal activities under the license have been conducted for a period of 24 months; or

(iv) No principal activities have been conducted for a period of 24 months in any separate building or outdoor area that contains residual radioactivity such that the building or outdoor area is unsuitable for release in accordance with Department requirements.

3. Coincident with the notification required by (8)(h)2., the licensee shall maintain in effect all decommissioning financial assurances established by the licensee pursuant to (8)(g) in conjunction with a license issuance or renewal or as required by this section. The amount of the financial assurance must be increased or may be decreased, as appropriate, to cover the detailed cost estimate for decommissioning established pursuant to (8)(h)5.(iv)(V).

(i) Any licensee who has not provided financial assurance to cover the detailed cost estimate submitted with the decommissioning plan shall do so when this rule becomes effective.

(ii) Following approval of the decommissioning plan, a licensee may reduce the amount of the financial assurance as decommissioning proceeds and radiological contamination is reduced at the site with the approval of the Department.

4. The Department may grant a request to extend the time periods in (8)(h)2. if the Department determines that this relief is not detrimental to the public health and safety and is otherwise in the public interest. The request must be submitted no later than 30 days before notification pursuant to (8)(h)2. The schedule for decommissioning set forth in (8)(h)2. may not commence until the Department has made a determination on the request.

5. (i) A decommissioning plan must be submitted if required by license condition or if the procedures and activities necessary to carry out decommissioning of the site or separate building or outdoor area have not been previously approved by the Department and these procedures could increase potential health and safety impacts to workers or to the public, such as in any of the following cases:

(I) Procedures would involve techniques not applied routinely during cleanup or maintenance operations;

(II) Workers would be entering areas not normally occupied where surface contamination and radiation levels are significantly higher than routinely encountered during operation;

(III) Procedures could result in significantly greater airborne concentrations of radioactive materials than are present during operation or;

(IV) Procedures could result in significantly greater releases of radioactive material to the environment than those associated with operation.

(ii) The Department may approve an alternate schedule for submittal of a decommissioning plan required pursuant to (8)(h)2. if the Department determines that the alternative schedule is necessary to the effective conduct of decommissioning operations and presents no undue risk from radiation to the public health and safety and is otherwise in the public interest.

(iii) Procedures such as those listed in (8)(h)5.(i) with potential health and safety impacts may not be carried out prior to approval of the decommissioning plan.

(iv) The proposed decommissioning plan for the site or separate building or outdoor area must include:

(I) A description of the conditions of the site or separate building or outdoor area sufficient to evaluate the acceptability of the plan;

(II) A description of planned decommissioning activities;

(III) A description of methods used to ensure protection of workers and the environment against radiation hazards during decommissioning;

(IV) A description of the planned final radiation survey; and

(V) An updated detailed cost estimate for decommissioning, comparison of that estimate with present funds set aside for decommissioning, and a plan for assuring the availability of adequate funds for completion of decommissioning.

(VI) For decommissioning plans calling for completion of decommissioning later than 24 months after plan approval, the plan shall include a justification for the delay based on the criteria in (8)(h)7.

(v) The proposed decommissioning plan will be approved by the Department if the information therein demonstrates that the decommissioning will be completed as soon as practicable and that the health and safety of workers and the public will be adequately protected.

6. (i) Except as provided in (8)(h)7., licensees shall complete decommissioning of the site or separate building or outdoor area as soon as practical but no later than 24 months following the initiation of decommissioning.

(ii) Except as provided in (8)(h)7. when decommissioning involves the entire site, the licensee shall request license termination as soon as practical but no later than 24 months following the initiation of decommissioning.

7. The Department may approve a request for an alternative schedule for completion of decommissioning of the site or separate building or outdoor area, and license termination if appropriate, if the Department determines that the alternative is warranted by consideration for the following:

(i) Whether it is technically feasible to complete decommissioning within the allotted 24-month period;

(ii) Whether sufficient waste disposal capacity is available to allow completion of decommissioning within the allotted 24-month period;

(iii) Whether a significant volume reduction in wastes requiring disposal will be achieved by allowing short-lived radionuclides to decay;

(iv) Whether a significant reduction in radiation exposure to workers can be achieved by allowing short-lived radionuclides to decay; and

(v) Other site-specific factors which the Department may consider appropriate on a case-by-case basis, such as the regulatory requirements of other government agencies, lawsuits, ground-water treatment activities, monitored natural ground-water restoration, actions that could result in more environmental harm than deferred cleanup, and other factors beyond the control of the licensee.

8. As the final step in decommissioning, the licensee shall follow the requirements of Rule .02(18)(d).

(9) **Special Requirements for Issuance of Certain Specific Licenses for Radioactive Material.**

(a) Use of Sealed Sources in Industrial Radiography. In addition to the requirements set forth in (8), a specific license for the use of sealed sources in industrial radiography will be issued if the licensee meets all of the requirements of Rule .04 of this Chapter.

(b) Human Use of Radioactive Materials in Institutions. In addition to the requirements set forth in (8), a specific license for the human use of radioactive material in an institution will be issued only if the licensee also meets all of the requirements of Rule .05 of this Chapter.

(c) Specific Licenses to Individual Physicians for Human Use of Radioactive Material.

1. An application by an individual physician or group of physicians for a specific license for human use of radioactive material will be approved if:

(i) The applicant satisfies the general requirements specified in (8), and all of the requirements of Rule .05 of this Chapter;

(ii) The application is for use in the applicant's practice in an office outside a medical institution;

(iii) The applicant has access to a hospital possessing adequate facilities to hospitalize and monitor the applicant's radioactive patients whenever it is advisable; and

(iv) The applicant has extensive experience in the proposed use, the handling and administration of radionuclides, and where applicable, the clinical management of radioactive patients.

2. The Department will not approve an application by an individual physician or group of physicians for a specific license to receive, possess, or use radioactive material on the premises of a medical institution unless:

(i) The use of radioactive material is limited to:

(I) The administration of radiopharmaceuticals for diagnostic or therapeutic purposes;

(II) The performance of diagnostic studies on patients to whom a radiopharmaceutical has been administered;

(III) The performance of in vitro diagnostic studies; or

(IV) The calibration and quality control checks of radioactive assay instrumentation, radiation safety instrumentation, and diagnostic instrumentation;

(ii) The physician brings the radioactive material with him and removes the radioactive material when he departs (The institution cannot receive, possess, or store radioactive material other than the amount of material remaining in the patient.); and

(iii) The medical institution does not hold a radioactive material license under (9)(b).

(d) Human Use of Sealed Sources Containing Radioactive Material. In addition to the requirements set forth in (8), a specific license for the human use of sealed sources containing radioactive material will be issued only if the applicant, or, if the application is made by an institution, the individual user is a physician and either:

1. Has specialized training in the therapeutic use of the sealed source considered (e.g., teletherapy unit, beta applicator), or has experience equivalent to such training; or

2. Has specialized training in the diagnostic use of the sealed source considered (e.g., bone mineral analyzer) or has experience equivalent to such training.

(e) Specific Licenses for Certain Medical Uses of Radioactive Material.

1. Subject to the provisions of (9)(e)2. and 3., an application for a specific license pursuant to (9)(b), (c), or (d), for any medical use or uses of radioactive material specified in Rule .05 of this Chapter, will be approved if:

(i) The applicant satisfies the requirements of (9)(b), (c), or (d);

(ii) The applicant, or the physician designated in the application as the individual user, has adequate clinical experience in the types of uses specified in the application;

(iii) The applicant, or the physicians and all other personnel who will be involved in the preparation and use of the radioactive material, has adequate training and experience in the handling of radioactive material appropriate to his participation in the uses specified in the application;

(iv) The applicant's radiation detection and measuring instrumentation is adequate for conducting the procedures involved in the uses specified in the application;

(v) The applicant's radiation safety operating procedures are adequate for handling and disposal of the radioactive material involved in the uses specified in the application; and

(vi) For uses regulated by Rules .05(41) and (44) of this Chapter, any licensee using radioactive material for clinical procedures other than those specified in the product labeling (package insert) shall comply with the product labeling regarding:

(I) Chemical and physical form,

(II) Route of administration, and

(III) Dosage range.

2. Any licensee who is authorized to use radioactive material pursuant to (9)(e) and to Rule .05 of this Chapter is subject to the following conditions:

(i) For paragraphs (41), (44), and (48) of Rule .05 of this Chapter, no licensee shall receive, possess, or use radioactive material except as a radiopharmaceutical manufactured in the form to be administered to the patient, and labeled, packaged, and distributed in accordance with a specific license issued by the Department pursuant to (11)(i), a specific license issued by the U.S. Nuclear Regulatory Commission pursuant to Section 32.72 of 10 CFR, Part 32, or a specific license issued by an Agreement State or a Licensing State pursuant to equivalent regulations.

(ii) For Rule 391-3-17-.05(44), no licensee shall receive, possess, or use generators or reagent kits containing radioactive material or shall use reagent kits that do not contain radioactive material to prepare radiopharmaceuticals containing radioactive material, except:

(I) Reagent kits not containing radioactive material that are approved by the Department, the U.S. Nuclear Regulatory Commission, an Agreement State, or a Licensing State for use by persons licensed pursuant to (9)(d) and to Rule .05 of this Chapter or

(II) Generators or reagent kits containing radioactive material that are manufactured, labeled, packaged, and distributed in accordance with a specific license issued by the Department pursuant to (11)(i), a specific license issued by the U.S. Nuclear Regulatory Commission pursuant to Section 32.73 of 10 CFR, Part 32, or a specific license issued by an Agreement State or a Licensing State pursuant to equivalent regulations; and

(iii) For Brachytherapy, regulated by Rule .05 of this Chapter, no licensee shall receive, possess, or use radioactive material except as contained in a source or device that has been manufactured, labeled, packaged, and distributed in accordance with a specific license issued by the Department pursuant to (11)(j), a specific license issued by the U.S. Nuclear Regulatory Commission pursuant to Section 32.74 of 10 CFR, Part 32, or a specific license issued to the manufacturer by an Agreement State or a Licensing State pursuant to equivalent regulations.

3. Any licensee who is licensed pursuant to (9) for one or more of the medical uses regulated by Rule .05 of this Chapter also is authorized to use radioactive material under the general license in (6)(g) for in vitro uses without filing the Certificate as required by (6)(g)2, provided that the licensee is subject to the other provisions of (6)(g).

(f) Use of Naturally-Occurring Radioactive Material (NORM). In addition to the requirements set forth in (8), a specific license for the use of NORM will be issued if the licensee meets all of the requirements of Rule .08 of this Chapter.

(g) Use of Sealed Sources in Irradiators. In addition to the requirements set forth in (8), a specific license for the use of sealed sources in large irradiators will be issued if the licensee meets all of the requirements of Rule .09 of this Chapter.

(10) **Special Requirements for Specific Licenses of Broad Scope.** These requirements are for the issuance of non-medical specific licenses of broad scope for radioactive material ("broad licenses") and contain certain regulations governing holders of such licenses. (The issuance of medical specific licenses of broad scope is addressed in (9).)

Nota Bene: See Note, in (3)(c)1.

(a) The different types of broad scope licenses are set forth below:

1. A "Type A specific license of broad scope" is a specific license authorizing receipt, acquisition, ownership, possession, use, and transfer of any chemical or physical form of the radioactive material specified in the license, but not exceeding quantities specified in the license, for any authorized purpose. The quantities specified are usually in the multicurie range.

2. A "Type B specific license of broad scope" is a specific license authorizing receipt, acquisition, ownership, possession, use, and transfer of any chemical or physical form of radioactive material specified in (21)(c), Schedule C, for any authorized purpose. The

possession limit for a Type B broad license, if only one radionuclide is possessed thereunder, is the quantity specified for that radionuclide in (21)(c), Schedule C, Column I. If two or more radionuclides are possessed thereunder, the possession limit for each is determined as follows: For each radionuclide, determine the ratio of the quantity possessed to the applicable quantity specified in (21)(c), Schedule C, Column I, for that radionuclide. The sum of the ratios for all radionuclides possessed under the license shall not exceed unity.

3. A "Type C specific license of broad scope" is a specific license authorizing receipt, acquisition, ownership, possession, use, and transfer of any chemical or physical form of radioactive material specified in (21)(c), Schedule C, for any authorized purpose. The possession limit for a Type C broad license, if only one radionuclide is possessed thereunder, is the quantity specified for that radionuclide in (21)(c), Schedule C, Column II. If two or more radionuclides are possessed thereunder, the possession limit is determined for each as follows: For each radionuclide, determine the ratio of the quantity possessed to the applicable quantity specified in (21)(c), Schedule C, Column II, for that radionuclide. The sum of the ratios for all radionuclides possessed under the license shall not exceed unity.

(b) An application for a Type A specific license of broad scope will be approved if:

1. The applicant satisfies the general requirements specified in (8);

2. The applicant has engaged in a reasonable number of activities involving the use of radioactive material; and

3. The applicant has established administrative controls and provisions relating to organization and management, procedures, record-keeping, material control and accounting, and management review that are necessary to assure safe operations, including:

(i) The establishment of a Radiation Safety Committee composed of such persons as a Radiation Safety Officer, a representative of management, and persons trained and experienced in the safe use of radioactive material;

(ii) The appointment of a Radiation Safety Officer who is qualified by training and experience in radiation protection, and who is available for advice and assistance on radiation safety matters; and

(iii) The establishment of appropriate administrative procedures to assure:

(I) Control of procurement and use of radioactive material;

(II) Completion of safety evaluations of proposed uses of radioactive material which take into consideration such matters as the adequacy of facilities and equipment, the training and experience of the user, and the operating or handling procedures; and

(III) Review, approval, and recording by the Radiation Safety Committee of safety evaluations of proposed uses prepared in accordance with (10)(b)3.(iii)(II) prior to the use of the radioactive material.

(c) An application for a Type B specific license of broad scope will be approved if:

1. The applicant satisfies the general requirements specified in (8); and

2. The applicant has established administrative controls and provisions relating to organization and management, procedures, record-keeping, material control and accounting, and management review that are necessary to assure safe operations, including:

(i) The appointment of a Radiation Safety Officer who is qualified by training and experience in radiation protection, and who is available for advice and assistance on radiation safety matters, and

(ii) The establishment of appropriate administrative procedures to assure:

(I) Control of procurement and use of radioactive material,

(II) Completion of safety evaluations of proposed uses of radioactive material which take into consideration such matters as the adequacy of facilities and equipment, the training and experience of the user, and the operating or handling procedures, and

(III) Review, approval, and recording by the Radiation Safety Officer of safety evaluations of proposed uses prepared in accordance with (10)(c)2.(ii)(II) prior to the use of the radioactive material.

(d) An application for a Type C specific license of broad scope will be approved if:

1. The applicant satisfies the general requirements specified in (8);

2. The applicant submits a statement that radioactive material will be used only by, or under the direct supervision of, individuals who have received:

(i) A college degree at the bachelor level, or equivalent training and experience, in the physical or biological sciences or in engineering, and

(ii) At least 40 hours of training and experience in the safe handling of radioactive material, and in the characteristics of ionizing radiation, units of radiation dose and quantities, radiation detection instrumentation, and biological hazards of exposure to radiation appropriate to the type and forms of radioactive material to be used; and

3. The applicant has established administrative controls and provisions relating to procurement of radioactive material, procedures, record-keeping, material control and accounting, and management review necessary to assure safe operations.

(e) Specific non-medical licenses of broad scope are subject to the following conditions:

1. Unless specifically authorized, persons licensed pursuant to (10) shall not:

(i) Conduct tracer studies in the environment involving direct release of radioactive material;

(ii) Receive, acquire, own, possess, use, or transfer devices containing 100,000 Curies (3.7 PBq) or more of radioactive material in sealed sources used for irradiation of materials;

(iii) Conduct activities for which a specific license issued by the Department under (9) or (11) is required; or

(iv) Add or cause the addition of radioactive material to any food, beverage, cosmetic, drug, or other product designed for ingestion or inhalation by, or application to, a human being.

2. Each Type A specific license of broad scope issued under (10) shall be subject to the condition that radioactive material possessed under the license may only be used by, or under the direct supervision of, individuals approved by the licensee's Radiation Safety Committee.

3. Each Type B specific license of broad scope issued under (10) shall be subject to the condition that radioactive material possessed under the license may only be used by, or under the direct supervision of, individuals approved by the licensee's Radiation Safety Officer.

4. Each Type C specific license of broad scope issued under (10) shall be subject to the condition that radioactive material possessed under the license may only be used by, or under the direct supervision of, individuals who satisfy the requirements of (10)(d).

(11) **Special Requirements for a Specific License to Manufacture, Assemble, Repair, or Distribute Commodities, Products, or Devices which Contain Radioactive Material.**

(a) [Reserved]

(b) Licensing the Distribution of Naturally-Occurring and Accelerator-Produced Radioactive Material (NARM) in Exempt Quantities.

Nota Bene: See Note, in (3)(c)1.

1. An application for a specific license to distribute NARM to persons exempted from this Chapter pursuant to (3)(b) will be approved if:

(i) The radioactive material is not contained in any food, beverage, cosmetic, drug, or other commodity designed for ingestion or inhalation by, or application to, a human being;

(ii) The radioactive material is in the form of processed chemical elements, compounds, mixtures, tissue samples, bioassay samples, counting standards, plated or encapsulated sources, or similar substances identified as radioactive and to be used for its radioactive properties, but is not incorporated into any manufactured or assembled commodity, product, or device intended for commercial distribution; and

(iii) The applicant submits copies of prototype labels and brochures and the Department approves such labels and brochures.

2. The license issued under (11)(b)1. is subject to the following conditions:

(i) No more than ten exempt quantities shall be sold or transferred in any single transaction. However, an exempt quantity may be composed of fractional parts of one or more of the exempt quantities provided the sum of the fractions shall not exceed unity.

(ii) Each exempt quantity shall be separately and individually packaged. No more than ten such packaged exempt quantities shall be contained in any outer package for transfer to persons exempt pursuant to (3)(b). The outer package shall be such that the dose rate at the external surface of the package does not exceed 0.5 millirem (5 μSv) per hour.

(iii) The immediate container of each quantity or separately- packaged fractional quantity of radioactive material shall bear a durable and legible label which:

(I) Identifies the radionuclide and the quantity of radioactivity, and

(II) Bears the words "Radioactive Material".

(iv) In addition to the labeling information required by (11)(b)2.(iii), the label affixed to the immediate container, or an accompanying brochure, shall:

(I) State that the contents are exempt from Licensing State requirements,

(II) Bear the words "Radioactive Material - Not for Human Use - Introduction into Foods, Beverages, Cosmetics, Drugs, or Medicinals, or into Products Manufactured for Commercial Distribution is Prohibited - Exempt Quantities Should Not Be Combined", and

(III) Set forth appropriate additional radiation safety precautions and instructions relating to the handling, use, storage, and disposal of the radioactive material.

3. Each person licensed under (11)(b) shall maintain records identifying, by name and address, each person to whom radioactive material is transferred for use under (3)(b) or the equivalent regulations of a Licensing State, and stating the kinds and quantities of radioactive material transferred. An annual summary report stating the total quantity of each radionuclide transferred under the specific license shall be filed with the Department. Each report shall cover the year ending June 30, and shall be filed within 30 days thereafter. If no transfers of radioactive material have been made pursuant to (11)(b) during the reporting period, the report shall so indicate.

(c) [Reserved]

(d) Licensing the Manufacture and Initial Transfer of Devices to Persons Generally Licensed Under (6)(c).

1. An application for a specific license to manufacture or initially transfer devices containing radioactive material to persons generally licensed under (6)(c) or equivalent regulations of the U.S. Nuclear Regulatory Commission, an Agreement State, or a Licensing State will be approved if:

(i) The applicant satisfies the general requirements of (8);

(ii) The applicant submits sufficient information relating to the design, manufacture, prototype testing, quality control, labels, proposed uses, installation, servicing, leak testing, operating and safety instructions, and potential hazards of the device to provide reasonable assurance that:

(I) The device can be safely operated by persons not having training in radiological protection,

(II) Under ordinary conditions of handling, storage, and use of the device, the radioactive material contained in the device will not be released or inadvertently removed from the device, and it is unlikely that any person will receive in any period of one year a dose in excess of ten percent of the annual limits specified in Rule .03(5)(a)1. of this Chapter, and

(III) Under accident conditions (such as fire and explosion) associated with handling, storage, and use of the device, it is unlikely that any person would receive an external radiation dose or dose commitment in excess of the following organ doses:

I. Whole body; head and trunk; active blood-forming organs; gonads; or lens of eye
15 rem (150 mSv);

II. Hands and forearms; feet and ankles; localized areas of skin averaged over areas no larger than one square centimeter
200 rem (2 Sv);

III. Other Organs
50 rem (500 mSv); and

(iii) Each device bears a durable, legible, and clearly visible label or labels approved by the Department, which contain in a clearly identified and separate statement:

(I) Instructions and precautions necessary to assure safe installation, operation, and servicing of the device (documents such as operating and service manuals may be identified in the label and used to provide this information);

(II) The requirement, or lack of requirement, for leak testing, or for testing any on/off mechanism and indicator, including the maximum time interval for such testing, and the identification of radioactive material by isotope, quantity of radioactivity, and date of determination of the quantity; and

(III) The information called for in one of the following statements, as appropriate, in the same or substantially similar form:

I. The receipt, possession, use, and transfer of this device, Model ____, Serial No.____, are subject to a general license or the equivalent and to the regulations of the U.S. Nuclear Regulatory Commission or of a State with which the U.S. Nuclear Regulatory Commission has entered into an agreement for the exercise of regulatory authority. This label shall be maintained on the device in a legible condition. Removal of this label is prohibited.

CAUTION - RADIOACTIVE MATERIAL

_____
(NAME OF MANUFACTURER OR INITIAL TRANSFEROR)

II. The receipt, possession, use, and transfer of this device, Model ____, Serial No.____, are subject to a general license or the equivalent, and to the regulations of a Licensing State. This label shall be maintained on the device in a legible condition. Removal of this label is prohibited.

CAUTION - RADIOACTIVE MATERIAL

_____
(NAME OF MANUFACTURER OR INITIAL TRANSFEROR)

Note: The model, serial number, and name of the manufacturer or distributor may be omitted from the appropriate label provided the information is elsewhere specified in labeling affixed to the device. Devices distributed pursuant to Regulations equivalent to (11)(d) prior to January 1, 1981, may bear labels authorized by the Regulations in effect on January 1, 1980. Devices distributed on or after January 1, 1981, including devices redistributed upon radioactive sources exchange, shall bear labels authorized in (11)(d).

(iv) Each device having a separable source housing that provides the primary shielding for the source also bears, on the source housing, a durable label containing the device model number and serial number, the isotope and quantity, the words, "Caution-Radioactive Material," the radiation symbol described in Rule .03(12), and the name of the manufacturer or initial distributor.

(v) Each device meeting the criteria of (6)(c)3.(xii), bears a permanent (e.g., embossed, etched, stamped, or engraved) label affixed to the source housing if separable, or the device if the source housing is not separable, that includes the words, "Caution-Radioactive Material," and, if practical, the radiation symbol described in Rule .03(12).

(vi) The device has been registered in the Sealed Source and Device Registry.

2. In the event the applicant desires that the device be tested at intervals longer than six months, either for proper operation of the on/off mechanism and indicator, if any, or for leakage of radioactive material, or for both, the applicant shall include in his application sufficient information to demonstrate that such longer interval is justified by performance characteristics of the device or similar devices and by design features which have a significant bearing on the probability or consequences of leakage of radioactive material from the device or failure of the on/off mechanism and indicator. In determining the acceptable interval for the test for leakage of radioactive material, the Department will consider information that includes, but is not limited to:

(i) Primary containment (source capsule);

(ii) Protection of primary containment;

(iii) Method of sealing containment;

(iv) Containment construction materials;

(v) Form of contained radioactive material;

(vi) Maximum temperature withstood during prototype tests;

(vii) Maximum pressure withstood during prototype tests;

(viii) Maximum quantity of contained radioactive material;

(ix) Radiotoxicity of contained radioactive material; and

(x) Operating experience with identical devices or similarly designed and constructed devices.

3. In the event the applicant desires that the general licensee under (6)(c), or under equivalent regulations of the U.S. Nuclear Regulatory Commission, an Agreement State, or a Licensing State, be authorized to install the device, collect the sample to be analyzed by a specific licensee for leakage of radioactive material, service the device, test the on/off mechanism and indicator, or remove the device from installation, the applicant shall include in his application written instructions to be followed by the general licensee, estimated calendar quarter doses associated with such activity or activities, and the basis for such estimates. The submitted information shall demonstrate that the performance of such activity or activities by an individual untrained in radiological protection, in addition to other handling, storage, and use of devices under the general license, is unlikely to cause that individual to receive a dose in excess of ten percent of the annual limits specified in Rule .03(5)(a)1. of this Chapter.

4. Each person licensed under (11)(d) shall provide the information specified in (11)(d)4.(i) to each generally licensed recipient to whom a device is to be transferred. This information must be provided before the device may be transferred. In the case of a transfer through an intermediate person, the information must also be provided to the intended user prior to initial transfer to the intermediate person.

(i) The required information includes:

(I) A copy of the general license contained in (6)(c); if (6)(c)3.(ii) through (iv) or (6)(c)3.(xii) do not apply to the particular device, these rules may be omitted.

(II) A copy of Rule .01(4), (5), (6), (7), (8), (9) and (10), Rule .02(13), (18), and (19), Rule .03(15)(a) and (b) and Rule .06;

(III) A list of the services that can only be performed by a specific licensee;

(IV) Information on acceptable disposal options including estimated costs of disposal; and

(V) An indication that improper disposal can result in high civil penalties.

(ii) If a device containing radioactive material is to be transferred for use under a general license contained in the U.S. Nuclear Regulatory Commission's, Agreement State's, or Licensing State's regulation equivalent to (6)(c), the licensee shall provide the information specified in (11)(d)4.(ii) to each person to whom a device is to be transferred. This information must be provided before the device may be transferred. In the case of a transfer through an intermediate person, the information must also be provided to the intended user prior to initial transfer to the intermediate person. The required information includes:

(I) A copy of this equivalent regulation or, alternatively, furnish a copy of the general license contained in (6)(c) to each person to whom he directly or through an intermediate person transfers radioactive material in a device for use pursuant to the general license of the U.S. Nuclear Regulatory Commission, the Agreement State, or the Licensing State. In the case of a transfer through an intermediate person, the information must also be provided to the intended user prior to initial transfer to the intermediate person. If a copy of the general license in (6)(c) is furnished to such a person, it shall be accompanied by a note explaining that the use of the device is regulated by the U.S. Nuclear Regulatory Commission, Agreement State, or Licensing State under requirements substantially the same as those in (6)(c); if certain paragraphs of the regulations do not apply to the particular device, those paragraphs may be omitted;

(II) A list of the services that can only be performed by a specific licensee;

(III) Information on acceptable disposal options including estimated costs of disposal;

(IV) An indication that improper disposal can result in high civil penalties; and

(V) The name or title, address, and telephone number of the contact at the appropriate NRC Regional Office or Agreement State from which additional information may be obtained.

(iii) An alternative approach to informing customers may be proposed by the licensee for approval by the Department.

5. Each device that is transferred after January 1, 2003, must meet the labeling requirements of (11)(d)1.(iii) through (v).

6. If a notification of bankruptcy has been made under (13)(e) or the license is to be terminated, each person licensed under (11)(d) shall provide, upon request, to the Department and as appropriate to any Agreement State or the NRC, records of final disposition required under (11)(d)4.(viii).

7. The licensee shall report to the Department all transfers of such devices to persons for use under the general license in (6)(c) and report all receipts of such devices from persons licensed under (6)(c).

(i) Such report shall identify each general licensee by the following:

(I) The name and mailing address for the location of use; if there is no mailing address for the location of use, an alternate address for the general licensee shall be submitted along with information on the actual location of use;

(II) The name, title, and telephone number of the person identified by the general licensee as having knowledge of and authority to take required actions to ensure compliance with the appropriate regulations and requirements;

(III) The date of the transfer;

(IV) The type, model number, and serial number of the device transferred; and

(V) The quantity and type of radioactive material contained in the device.

(ii) If one or more intermediate persons will temporarily possess the device at the intended place of use prior to its possession by the user, the report shall include the same information for both the intended user and each intermediate person, and clearly designate the intermediate person(s).

(iii) For devices received from a (6)(c) general licensee, the report must include the identity of the general licensee by name and address, the type, model number, and serial number of the device received, the date of receipt, and, in the case of devices not initially transferred by the reporting licensee, the name of the manufacturer or initial transferor.

(iv) If the licensee makes changes to a device possessed by a (6)(c) general licensee, such that the label must be changed to update required information, the report must identify the general licensee, the device, and the changes to information on the device label.

(v) The report must cover each calendar quarter, must be filed within 30 days of the end of the calendar quarter, and must clearly indicate the period covered by the report.

(vi) The report must clearly identify the specific licensee submitting the report and include the license number of the specific licensee.

(vii) If no transfers have been made to or from persons generally licensed under (6)(c) during the reporting period, the report shall so indicate.

8. The licensee shall furnish reports to other agencies as follows:

(i) Report to the U.S. Nuclear Regulatory Commission all transfers of such devices to persons for use under the U.S. Nuclear Regulatory Commission general license in Section 31.5 of 10 CFR, Part 31 and all receipts of devices from U.S. Nuclear Regulatory Commission Section 31.5 general licensees;

(ii) Report to the responsible state agency all transfers of devices manufactured and distributed pursuant to (11)(d) for use under a general license in that state's regulations equivalent to (6)(c) and all receipts of devices from general licensees in the state agency’s jurisdiction;

(iii) The reports identified in 8.(i) and 8.(ii) shall identify each general licensee by the following:

(I) The name and mailing address for the location of use; if there is no mailing address for the location of use, an alternate address for the general licensee shall be submitted along with information on the actual location of use.

(II) The name, title and telephone number the person identified by the general licensee as having knowledge of and authority to take required actions to ensure compliance with the appropriate regulations and requirements;

(III) The date of the transfer;

(IV) The type, model, and serial number of the device transferred; and

(V) The quantity and type of radioactive material contained in the device.

(iv) If one or more intermediate persons will temporarily possess the device at the intended place of use prior to its possession by the user, the report shall include the same information for both the intended user and each intermediate person, and clearly designate the intermediate person(s).

(v) For devices received from a (6)(c) general licensee, the report must include the identity of the general licensee by name and address, the type, model number, and serial number of the device received, the date of receipt, and, in the case of devices not initially transferred by the reporting licensee, the name of the manufacturer or initial transferor.

(vi) If the licensee makes changes to a device possessed by a general licensee, such that the label must be changed to update required information, the report must identify the general licensee, the device, and the changes to information on the device label.

(vii) The report must cover each calendar quarter, must be filed within 30 days of the end of the calendar quarter, and must clearly indicate the period covered by the report.

(viii) The report must clearly identify the specific licensee submitting the report and must include the license number of the specific licensee.

(ix) If no transfers have been made to U.S. Nuclear Regulatory Commission licensees during the reporting period, report this information to the U.S. Nuclear Regulatory Commission; and

(x) If no transfers have been made to general licensees within a particular state during the reporting period, report this information to the responsible state agency upon request of that agency.

9. Each person licensed under (11)(d) to distribute devices to generally licensed persons shall maintain all information concerning transfers and receipts of devices that supports the reports required by (11)(d)4. These records shall be maintained for a period of three years following the date of the recorded event.

(e) Special Requirements for the Manufacture, Assembly, or Repair of Luminous Safety Devices for Use in Aircraft. An application for a specific license to manufacture, assemble, repair, or initially transfer luminous safety devices containing tritium or promethium-147 for use in aircraft, and for distribution to persons generally licensed under (6)(d), will be approved subject to the following conditions:

1. The applicant satisfies the general requirements specified in (8), and

2. The applicant satisfies the requirements of Sections 32.53, 32.54, 32.55, and 32.56 of 10 CFR, Part 32, or their equivalent.

(f) Special Requirements for License to Manufacture or Initially Transfer Calibration Sources Containing Americium-241, Plutonium, or Radium-226 for Distribution to Persons Generally Licensed Under (6)(f). An application for a specific license to manufacture or initially transfer calibration and reference sources containing americium-241, plutonium, or radium-226 to persons generally licensed under (6)(f) will be approved subject to the following conditions:

1. The applicant satisfies the general requirement of (8), and

2. The applicant satisfies the requirements of Sections 32.57, 32.58, and 32.59 of 10 CFR, Part 32, and Section 70.39 of 10 CFR, Part 70, or their equivalent.

(g) Manufacture and Distribution of Radioactive Material for Certain In Vitro Clinical or Laboratory Testing Under General License. An application for a specific license to manufacture or distribute radioactive material for use under the general license of (6)(g) will be approved subject to the following conditions:

1. The applicant satisfies the general requirements specified in (8);

2. The radioactive material is to be prepared for distribution in prepackaged units of:

(i) Iodine-125 in units not exceeding ten microcuries (370 kBq) each,

(ii) Iodine-131 in units not exceeding ten microcuries (370 kBq) each,

(iii) Carbon-14 in units not exceeding ten microcuries (370 kBq) each,

(iv) Hydrogen-3 (tritium) in units not exceeding 50 microcuries (1.85 MBq) each,

(v) Iron-59 in units not exceeding 20 microcuries (740 kBq) each,

(vi) Cobalt-57 in units not exceeding ten microcuries (370 kBq) each,

(vii) Selenium-75 in units not exceeding ten microcuries (370 kBq) each,

(viii) Mock Iodine-125 in units not exceeding 0.05 microcurie (1.85 kBq) of iodine-129 and 0.005 microcurie (185 Bq) of americium-241 each;

3. Each prepackaged unit bears a durable and clearly visible label:

(i) Identifying the radioactive contents as to chemical form and radionuclide, and indicating that the amount of radioactivity does not exceed ten microcuries (370 kBq) of iodine-125, iodine-131, carbon-14, cobalt-57, or selenium-75; 50 microcuries (1.85 Mbq) of hydrogen-3 (tritium); 20 microcuries (740 kBq) of iron-59; or Mock Iodine-125 in units not exceeding 0.05 microcurie (1.85 kBq) of iodine-129 and 0.005 microcurie (185 Bq) of americium-241 each; and

(ii) Displaying the radiation caution symbol described in Rule 391-3-17-.03, of this Chapter, and the words, "CAUTION, RADIOACTIVE MATERIAL", and "Not for Internal or External Use in Humans or Animals";

4. One of the following statements, as appropriate, or a substantially similar statement which contains the information called for in one of the following statements, appears on a label affixed to each prepackaged unit or appears in a leaflet or brochure which accompanies the package:

(i) This radioactive material may be received, acquired, possessed, and used only by physicians, veterinarians in the practice of veterinary medicine, clinical laboratories, or hospitals and only for in vitro clinical or laboratory tests not involving internal or external administration of the material, or the radiation therefrom, to human beings or animals. Its receipt, acquisition, possession, use, and transfer are subject to the regulations of and a general license of the U.S. Nuclear Regulatory Commission or of a State with which the U.S. Nuclear Regulatory Commission has entered into an agreement for the exercise of regulatory authority.

_____:
(NAME OF MANUFACTURER)

(ii) This radioactive material may be received, acquired, possessed, and used only by physicians, veterinarians in the practice of veterinary medicine, clinical laboratories, or hospitals and only for in vitro clinical or laboratory tests not involving internal or external administration of the material, or the radiation therefrom, to human beings or animals. Its receipt, acquisition,

possession, use, and transfer are subject to the regulations of and a general license of a Licensing State.

_____
(NAME OF MANUFACTURER);

and

5. The label affixed to the unit, or the leaflet or brochure, which accompanies the package, contains adequate information as to the precautions to be observed in handling and storing such radioactive material. In the case of the Mock Iodine-125 reference or calibration source, the information accompanying the source must also contain directions to the licensee regarding the waste disposal requirements set out in Rule .03(13) of this Chapter.

(h) Licensing the Manufacture and Distribution of Ice-Detection Devices. An application for a specific license to manufacture and initially transfer ice-detection devices to persons generally licensed under (6)(e) will be approved subject to the following conditions:

1. The applicant satisfies the general requirements of (8), and

2. The criteria of Sections 32.61 and 32.62 of 10 CFR, Part 32, are met.

(i) Manufacture, Preparation, or Transfer, for Commercial Distribution of Pharmaceuticals Containing Radioactive Material for Medical Use. An application for a specific license to manufacture, prepare, or transfer for commercial distribution pharmaceuticals containing radioactive material for use by persons licensed pursuant to (9) for the uses listed in (41), (44), and (48) of Rule .05 of this Chapter will be approved subject to the following conditions:

1. The applicant satisfies the general requirements specified in (8);

2. The applicant submits evidence that the applicant is at least one of the following:

(i) Registered or licensed with the U.S. Food and Drug Administration (FDA) as the owner or operator of a drug establishment that engages in the manufacture, preparation, propagation, compounding, or processing of a drug under 21 CFR 207.20(a);

(ii) Registered or licensed with a State Agency as a drug manufacturer; ~~or~~

(iii) Licensed as a pharmacy by the Georgia State Board of Pharmacy;

(iv) Operating as a nuclear pharmacy within a Federal medical institution; or

(v) A Positron Emission Tomography (PET) drug production facility registered with a State agency.

3. The applicant submits information on the radionuclide, chemical and physical form, packaging including maximum activity per vial, syringe, generator, or other container of the radiopharmaceutical, and shielding provided by the packaging to show it is appropriate for safe handling and storage of radiopharmaceuticals by licensees; and

4. The applicant satisfies the following requirements:

(i) A label is affixed to each transport radiation shield, whether it is constructed of lead, glass, plastic, or other material, of a radiopharmaceutical to be transferred for commercial distribution. The label must include the radiation symbol and words "Caution, Radioactive Material" or "Danger Radioactive Material"; the name of the radiopharmaceutical or its abbreviation, and quantity of radioactivity at a specified date and time. For radiopharmaceuticals with a half-life greater than 100 days, the time may be omitted.

(ii) A label is affixed to each syringe, vial, or other container used to hold a radiopharmaceutical to be transferred for commercial distribution. The label must include the words "Caution, Radioactive Material" or "Danger Radioactive Material" and an identifier that ensures that the syringe, vial, or other container can be correlated with the information on the transport radiation shield label, leaflet, or brochure.

5. A licensee described by (11)(i)2.(iii) or (iv):

(i) May prepare radiopharmaceuticals for medical use, as defined in Rule .05(2)(s) provided that the radiopharmaceutical is prepared by either an authorized nuclear pharmacist, as specified in (ii) and (iv) or an individual under the supervision of an authorized nuclear pharmacist as specified in Rule .05(18)(b).

(ii) May allow a pharmacist to work as an authorized nuclear pharmacist if this individual:

(I) Qualifies as an authorized nuclear pharmacist as defined in .05(2)(e),

(II) Meets the requirements specified in Rule .05 (24)(b) and .05(27) and the licensee has received an approved license amendment identifying this individual as an authorized nuclear pharmacist, or has notified the Department in accordance with Rule .05(11), or

(III) Is designated as an authorized nuclear pharmacist in accordance with (iv).

(iii) The actions authorized in (i) and (ii) are permitted not withstanding more restrictive language in license conditions.

(iv) May designate a nuclear pharmacist in accordance with Rule .05(26) as an authorized nuclear pharmacist if the individual is identified as of December 31, 1996, as an "authorized user" on a license issued by the Department, the NRC, or an Agreement State, under this rule or equivalent requirements, or if the individual was a nuclear pharmacist preparing only radiopharmaceuticals containing accelerator produced radioactive material and the individual practiced at a Government Agency or Federally recognized Indian Tribe before November 30, 2007 or at all other pharmacies before ‘August 8, 2009, or an earlier date as noticed by the NRC.

(v) Shall provide to the Department a copy of each individual’s certification by the Board of Pharmaceutical Specialties, or the Department, NRC, Agreement State license, or permit issued by a licensee of broad scope, or documentation that only accelerator-produced radioactive materials were used in the practice of nuclear pharmacy at a Government agency or Federally recognized Indian Tribe before November 30, 2007 or at all other locations of use before August 8, 2009, or an earlier date as noticed by the NRC, and a copy of the individual’s license to practice pharmacy in the State of Georgia issued by the Secretary of State’s office, no later than

30 days after the date that the licensee allows pursuant to (ii) and (iii), the individual to work as an authorized nuclear pharmacist.

6. A licensee shall possess and use instrumentation to measure the radioactivity of radiopharmaceuticals. The licensee shall measure, by direct measurements or by combination of measurements and calculations, the amount of radioactivity in dosages of alpha-, beta-, or photon-emitting radiopharmaceuticals prior to transfer for commercial distribution. In addition, the licensee shall:

(i) Perform test before initial use, periodically, and following repair, on each instrument for accuracy, linearity, and geometry dependence, as appropriate for the use of the instrument; and make adjustments when necessary; and

(ii) Check each instrument for constancy and proper operation at the beginning of each day of use.

7. Nothing in this section relieves the licensee from complying with applicable FDA, other Federal, or other State requirements governing radiopharmaceuticals.

(j) Manufacture and Distribution of Sources or Devices Containing Radioactive Material for Medical Use. An application for a specific license to manufacture and distribute sources and devices containing radioactive material to persons licensed pursuant to Rule .05 of this chapter for use as a calibration, transmission, or reference source or for medical uses regulated by Rule .05(55), (65), or (67) of this Chapter will be approved subject to the following conditions:

1. The applicant satisfies the general requirements of (8);

2. The applicant submits sufficient information regarding each type of source or device pertinent to an evaluation of its radiation safety, including:

(i) The radioactive material contained, its chemical and physical form, and amount,

(ii) Details of design and construction of the source or device,

(iii) Procedures for, and results of, prototype tests to demonstrate that the source or device will maintain its integrity under stresses likely to be encountered in normal use and accidents,

(iv) For devices containing radioactive material, the radiation profile of a prototype device,

(v) Details of quality control procedures to assure that production sources and devices meet the standards of the design and prototype tests,

(vi) Procedures and standards for calibrating sources and devices,

(vii) Legend and methods for labeling sources and devices as to their radioactive content, and

(viii) Instructions for handling and storing the source or device from the radiation safety standpoint. (These instructions are to be included on a durable label attached to the source or device or attached to a permanent storage container for the source or device. Instructions which are too lengthy for such label may be summarized on the label and printed in detail on a brochure that is referenced on the label.)

3. The label affixed to the source or device, or to the permanent storage container for the source or device, contains information on the radionuclide, quantity, and date of assay, and a statement that the source or device is licensed by the Department for distribution to persons licensed pursuant to (9) and to Rule .05(55), (65), or (67) of this Chapter or under equivalent licenses of the U.S. Nuclear Regulatory Commission, an Agreement State, or a Licensing State;

4. The source or device has been registered in the Sealed Source and Device Registry;

5. In the event the applicant desires that the source or device be required to be tested for leakage of radioactive material at intervals longer than six months, he shall include in his application sufficient information to demonstrate that such longer interval is justified by performance characteristics of the source or device or similar sources or devices and by design features that have a significant bearing on the probability or consequences of leakage of radioactive material from the source;

6. In determining the acceptable interval for test of leakage of radioactive material, the Department will consider information that includes, but is not limited to, that which is listed in (11)(d)2.

(k) Requirements for License to Manufacture and Distribute Industrial Products Containing Depleted Uranium for Mass-Volume Applications.

1. An application for a specific license to manufacture industrial products and devices containing depleted uranium for use pursuant to (5)(d) or equivalent regulations of the U.S. Nuclear Regulatory Commission or an Agreement State will be approved subject to the following conditions:

(i) The applicant satisfies the general requirements specified in (8);

(ii) The applicant submits sufficient information relating to the design, manufacture, prototype testing, quality control procedures, labeling or marking, proposed uses, and potential hazards of the industrial product or device to provide reasonable assurance that possession, use, or transfer of the depleted uranium in the product or device is not likely to cause any individual to receive in any period of 1 year a radiation dose in excess of ten percent of the annual limits specified in Rule .03(5)(a)1. of this Chapter; and

(iii) The applicant submits sufficient information regarding the industrial product or device and the presence of depleted uranium for a mass-volume application in the product or device to provide reasonable assurance that unique benefits will accrue to the public because of the usefulness of the product or device.

2. In the case of an industrial product or device whose unique benefits are questionable, the Department will approve an application for a specific license under (11)(k) only if the product or device is found to combine a high degree of utility and low probability of uncontrolled disposal and dispersal of significant quantities of depleted uranium into the environment.

3. The Department may deny any application for a specific license under (11)(k) if the end use(s) of the industrial product or device cannot be reasonably foreseen.

4. Each person licensed pursuant to (11)(k)1. shall:

(i) Maintain the level of quality control required by the license in the manufacture of the industrial product or device and in the installation of the depleted uranium into the product or device;

(ii) Label or mark each unit to:

(I) Identify the manufacturer of the product or device and the number of the license under which the product or device was manufactured, the fact that the product or device contains depleted uranium, and the quantity of depleted uranium in each product or device; and

(II) State that the receipt, possession, use, and transfer of the product or device are subject to a general license or the equivalent and to the regulations of the U.S. Nuclear Regulatory Commission or an Agreement State;

(iii) Assure that the depleted uranium before being installed in each product or device has been impressed with the following legend clearly legible through any plating or other covering: "Depleted Uranium";

(iv) Furnish a copy of the general license contained in:

(I) (5)(d) and a copy of Department form "Registration Certificate - Use of Depleted Uranium Under General License" to each person to whom he transfers depleted uranium in a product or device for use pursuant to the general license contained in (5)(d), or

(II) The U.S. Nuclear Regulatory Commission's or Agreement State's regulation equivalent to (5)(d) and a copy of the U.S. Nuclear Regulatory Commission's or Agreement State's certificate, or, alternatively, furnish a copy of the general license contained in (5)(d) and a copy of Department form "Registration Certificate - Use of Depleted Uranium Under General License" to each person to whom he transfers depleted uranium in a product or device for use pursuant to the general license of the U.S. Nuclear Regulatory Commission or an Agreement State, with a note explaining that use of the product or device is regulated by the U.S. Nuclear Regulatory Commission or an Agreement State under requirements substantially the same as those in (5)(d);

(v) Report to the Department all transfers of industrial products or devices to persons for use under the general license in (5)(d). Such report shall identify each general licensee by name and address, an individual by name and/or position who may constitute a point of contact between the Department and the general licensee, the type and model number of device transferred, and the quantity of depleted uranium contained in the product or device. The report shall be submitted within 30 days after the end of each calendar quarter in which such a product or device is transferred to the generally licensed person. If no transfers have been made to persons generally licensed under (5)(d) during the reporting period, the report shall so indicate;

(vi) Report to other agencies as follows:

(I) To the U.S. Nuclear Regulatory Commission all transfers of industrial products or devices to persons for use under the U.S. Regulatory Commission general license in Section 40.25 of 10 CFR, Part 40;

(II) To the responsible state agency all transfers of devices manufactured and distributed pursuant to 10CFR32.210 for use under a general license in that state's regulations equivalent to (5)(d);

(III) Have such reports identify each general licensee by name and address, an individual by name and/or position who may constitute a point of contact between the agency and the general licensee, the type and model number of the device transferred, and the quantity of depleted uranium contained in the product or device. The report shall be submitted within 30 days after the end of each calendar quarter in which such product or device is transferred to the generally licensed person;

(IV) If no transfers have been made to U.S. Nuclear Regulatory Commission licensees during the reporting period, report this information to the U.S. Nuclear Regulatory Commission; and

(V) If no transfers have been made to general licensees within a particular Agreement State during the reporting period, report this information to the responsible Agreement State agency upon the request of that agency; and

(vii) Keep records showing the name, address, and point of contact for each general licensee to whom he transfers depleted uranium in industrial products or devices for use pursuant to the general license provided in (5)(d) or equivalent regulations of the U.S. Nuclear Regulatory Commission or an Agreement State. The records shall be maintained for a period of two years and shall show the date of each transfer, the quantity of depleted uranium in each product or device transferred, and compliance with the report requirements of (11).

(l) [Reserved]

(12) **Issuance of Specific Licenses.**

(a) Upon a determination that an application meets the requirements of the Act and the Regulations of the Department, the Department may issue a specific license authorizing the proposed activity in such form and containing such conditions and limitations as it deems appropriate or necessary to effectuate the purposes of the Act.

(b) The Department may incorporate in any license at the time of issuance, or thereafter, such additional requirements and conditions, as authorized by Rule, Regulation, or Order, with respect to the licensee's receipt, possession, use, and transfer of radioactive material subject to this Chapter as necessary in order to:

1. Minimize danger to public health and safety or property;

2. Require such reports and the keeping of such records, and to provide for such inspections of activities under the license as necessary to effectuate the purposes of the Act; and

3. Prevent loss or theft of material subject to this Rule.

(13) **Specific Terms and Conditions of Licenses.**

(a) Each license issued pursuant to this Rule shall be subject to all the provisions of the Act, and to all Rules, and Regulations of the Department and Orders of the Director.

(b) No license issued or granted under this Rule and no right to possess or utilize radioactive material granted by any license issued pursuant to this Rule shall be transferred, assigned, or in any manner disposed of, either voluntarily or involuntarily, directly or indirectly, through transfer of control of any license to any person unless the Department, after securing full information, finds that the transfer is in accordance with the provisions of the Act, and gives its consent in writing.

(c) Each person licensed by the Department pursuant to this Rule shall confine use and possession of the material licensed to the locations and purposes authorized in the license.

(d) Each licensee shall notify the Department in writing immediately and request termination of his license when the licensee decides to terminate all activities involving radioactive materials authorized under the license. This notification and request for termination must include the information specified in (18)(d).

(e) Each general licensee required to register by (6)(c)3.(xi) and each specific licensee shall notify the Department in writing immediately following the filing of a voluntary or involuntary petition for bankruptcy under any Chapter of Title 11 (Bankruptcy) of the United States Code by or against:

1. The licensee;

2. An entity (as that term is defined in 11 U.S.C. 101(15)) controlling the licensee or listing the license or licensee as property of the estate; or

3. An affiliate (as that term is defined in 11 U.S.C. 101(2) of the licensee.

(f) The notification specified in (13)(e) shall indicate the bankruptcy court in which the petition for bankruptcy was filed and the date of the filing of the petition.

(g) Security requirements for portable gauges. Each portable gauge licensee shall use a minimum of two independent physical controls that form tangible barriers to secure portable gauges from unauthorized removal, whenever portable gauges are not under the control and constant surveillance of the licensee.

(h) Each licensee preparing technetium-99m radiopharmaceuticals from molybdenum-99/technetium-99m generators or rubidium-82 from strontium-82/rubidium-82 generators shall test the generator eluates for molybdenum-99 breakthrough or strontium-82 and strontium-85 contamination, respectively, in accordance with Rule .05(45)(a)(b) and (c). The licensee shall record the results of each test and retain each record for 3 years after the record is made.

(j) 1. Authorization under .02(7)(j) to produce Positron Emission Tomography (PET) radioactive drugs for noncommercial transfer to medical use licensees in its consortium does not relieve the licensee from complying with applicable FDA, other Federal, and State requirements governing radioactive drugs.

2. Each licensee authorized under .02(7)(j) to produce PET radioactive drugs for noncommercial transfer to medical use licensees in its consortium shall:

(i) Satisfy the labeling requirements in .02(11)(i)4. of this Rule for each PET radioactive drug transport radiation shield and each syringe, vial, or other container used to hold a PET radioactive drug intended for noncommercial distribution to members of its consortium.

(ii) Possess and use instrumentation to measure the radioactivity of the PET radioactive drugs intended for noncommercial distribution to members of its consortium and meet the procedural, radioactivity measurement, instrument test, instrument check, and instrument adjustment requirements in .02(11)(i)6. of this Rule.

3. A licensee that is a pharmacy authorized under .02(7)(j) to produce PET radioactive drugs for noncommercial transfer to medical use licensees in its consortium shall require that any individual that prepares PET radioactive drugs shall be:

(i) an authorized nuclear pharmacist that meets the requirements in .02(11)(i)5. of this Rule, or

(ii) an individual under the supervision of an authorized nuclear pharmacist as specified in Rule .05(18).

4. A pharmacy, authorized under .02(7)(j) to produce PET radioactive drugs for noncommercial transfer to medical use licensees in its consortium that allows an individual to work as an authorized nuclear pharmacist, shall meet the requirements of .02(11)(i)5.(v) of this Rule.

(14) **Expiration of Licenses.** Except as provided in (15)(b), each specific license shall expire at the end of the day, in the month and year stated therein.

(15) **Renewal of Licenses.**

(a) No less than 30 days before the expiration date specified in a specific license, the licensee shall either:

1. Submit an application for license renewal filed in accordance with (7), or

2. Notify the Department in writing in accordance with (13)(d) and (15)(c) if the licensee decides not to renew the license.

(b) In any case in which a licensee, not less than 30 days prior to the expiration of his existing license, has filed an application in proper form for renewal or for a new license authorizing the same activities, such existing license shall not expire until the application has been finally determined by the Department.

(c) If a licensee does not submit an application for license renewal on or before the expiration date specified in the license, then the licensee shall, on or before that expiration date:

1. Terminate the use of radioactive material,

2. Remove radioactive contamination to the extent practicable,

3. Properly dispose of the radioactive material, and

4. Submit the information specified in (18)(d).

(16) **Amendment of Licenses at Request of Licensee.** Applications for amendment of a license shall be filed in accordance with (7) and shall specify the respects in which the licensee desires the license to be amended and the grounds for such amendment.

(17) **Department Action on Applications to Renew or Amend.** In considering an application by a licensee to renew or amend the license, the Department will apply the criteria set forth in (8), (9), (10), or (11), as applicable.

(18) **Modification, Revocation, and Termination of Licenses.**

(a) The terms and conditions of all licenses shall be subject to amendment, revision, or modification, or the license may be suspended or revoked by reason of amendments to the Act, or by reason of Rules, Regulations, and Orders issued by the Director.

(b) Any license may be revoked, suspended, or modified, in whole or in part, for any material false statement in the application or any statement of fact required under provisions of the Act or of this Rule, or because of conditions revealed by such application or statement of fact or any report, record, or inspection or other means which would warrant the Department to refuse to grant a license on an original application, or for violation of, or failure to observe, any of the terms and conditions of the Act, of the license, or of any Rule, Regulation, or Order of the Department.

(c) Each specific license revoked by the Department expires at the end of the day on the date of the Department's final determination to revoke the license, or on the expiration date stated in the determination, or as otherwise provided by Department Order.

(d) The Department may terminate a specific license upon request submitted by the licensee to the Department in writing provided the following:

1. The licensee certifies the disposition of all licensed material, including accumulated wastes, by submitting a completed "Request to Terminate Radioactive Materials License" form or equivalent information; and

2. The licensee conducts a radiation survey of the premises where the licensed activities were carried out and submits a report of the results of the survey unless the licensee demonstrates that the premises are suitable for release in accordance with the requirements for decommissioning in Rule .03(7). As appropriate, the licensee shall:

(i) Report levels of gamma radiation in units of microroentgen (millisieverts) per hour at one meter from surfaces, and report levels of radioactivity, including alpha and beta, in units of disintegrations per minute or microcuries (megabecquerels) per 100 square centimeters - removable and fixed - for surfaces, microcuries (megabecquerels) per milliliter for water, and picocuries (becquerels) per gram for solids such as soils or concrete; and

(ii) Specify the survey instrument(s) used and certify that each instrument is properly calibrated and tested.

3. If detectable levels of residual radioactive contamination are found, the license continues to be in effect, even beyond the expiration date if necessary, with respect to possession of residual radioactive material as contamination until the Department notifies the licensee in writing that

the license is terminated. Each licensee who possesses residual radioactive material under this paragraph shall initiate decommissioning activities as required by (8)(h).

4. If no residual radioactive contamination is detected, the licensee shall submit a certification that no detectable radioactive contamination was found. If the information submitted is found to be adequate, the Department will notify the licensee in writing that the license is terminated.

(e) Specific licenses, including expired licenses, will be terminated by written notice to the licensee when the Department determines that:

1. Radioactive material has been properly disposed;

2. Reasonable effort has been made to eliminate residual radioactive contamination, if present; and

3. (i) A radiation survey has been performed which demonstrates that the premises are suitable for release in accordance with Department requirements for decommissioning in Rule .03(7); or

(ii) Other information submitted by the licensee is sufficient to demonstrate that the premises are suitable for release in accordance with Department requirements for decommissioning in Rule .03(7).

4. Prior to license termination, each licensee authorized to possess radioactive material with a half-life greater than 120 days, in an unsealed form, shall forward the following records to the Department:

(i) Records of disposal of licensed material made under Rule .03(13)(b) (including burials authorized before January 28, 1982),.03(13)(c), .03(13)(d), .03(13)(e); and

(ii) Records required by Rule .03(14)(c)2.(iv).

5. If licensed activities are transferred or assigned in accordance with Rule .02(13)(b), each licensee authorized to possess radioactive material, with a half-life greater than 120 days, in an unsealed form, shall transfer the following records to the new licensee and the new licensee will be responsible for maintaining these records until the license is terminated:

(i) Records of disposal of licensed material made under Rule .03(13)(b) (including burials authorized before January 28, 1982), .03(13)(c), .03(13)(d), .03(13)(e); and

(ii) Records required by Rule .03(14)(c)2.(iv).

6. Prior to license termination, each licensee shall forward the records required by Rule .02(8)(g)7. to the Department.

(19) **Transfer of Material.**

(a) Authorization for Transfer. No licensee shall transfer radioactive material except as authorized pursuant to (19)(b).

(b) Condition of Transfer. Any licensee may transfer radioactive material, subject to acceptance by the transferee, to:

1. The Department, after receiving prior approval from the Department;

2. The United States Department of Energy or any successor thereto;

3. Any person exempt from this Rule to the extent permitted under such exemption;

4. Any person licensed to receive such material under terms of a general license or its equivalent, or specific license or equivalent licensing document issued by the Department, the U.S. Nuclear Regulatory Commission, any Agreement State, or any Licensing State, to any person otherwise authorized to receive such material by the Federal Government or any agency thereof, the Department, any Agreement State, or any Licensing State; or

5. Any person authorized by the Department in writing.

(c) Before transferring radioactive material to a specific licensee of the Department, the U.S. Nuclear Regulatory Commission, an Agreement State, or a Licensing State, or to a general licensee who is required to register with the Department, the U.S. Nuclear Regulatory Commission, an Agreement State, or a Licensing State prior to receipt of the radioactive material, the licensee transferring the material shall verify that the transferee's license authorizes the receipt of the type, form, and quantity of radioactive material to be transferred.

(d) The following methods for the verification required by (19)(c) are acceptable:

1. The transferor may possess, and read, a current copy of the transferee's specific license or registration certificate.

2. The transferor may have in his possession a written certification by the transferee that the transferee is authorized by license or registration certificate to receive the type, form, and quantity of radioactive material to be transferred, specifying the license or registration certificate number, issuing agency, and expiration date.

3. For emergency shipments, the transferor may accept oral certification by the transferee that the transferee is authorized by license or registration certificate to receive the type, form, and quantity of radioactive material to be transferred, specifying the license or registration certificate number, issuing agency, and expiration date; provided that the oral certification is confirmed in writing within ten days.

4. The transferor may obtain other sources of information compiled by a reporting service from official records of the Department, the U.S. Nuclear Regulatory Commission, the licensing agency of an Agreement State, or a Licensing State regarding the identity of licensees and the scope and expiration date of licenses and registration.

5. When none of the methods of verification described in paragraphs (19)(d)1., 2., 3., and 4. is readily available or when a transferor desires to verify that information received by one of such methods is correct or up-to-date, the transferor may obtain and record confirmation from the Department, the U.S. Nuclear Regulatory Commission, the licensing agency of an Agreement State, or a Licensing State that the transferee is licensed to receive the radioactive material.

(e) Preparation for shipment and transport of radioactive material shall be in accordance with the provisions of Rule .06 of this Chapter.

(20) **Reciprocity.**

(a) Persons licensed by other Agencies. Subject to the provisions of this Chapter, any person who holds a specific license from the U.S. Nuclear Regulatory Commission, a Licensing State, or any Agreement State, other than this State, and issued by the agency having jurisdiction where the licensee maintains an office for directing the licensed activity and at which radiation safety records are normally maintained, is hereby granted a general license to conduct the activities authorized in such licensing document within this State, except in areas of exclusive federal jurisdiction, for a period not in excess of 180 days in any calendar year provided that:

1. The licensing document does not limit the activity authorized by such document to specified installations or locations;

2. The out-of-state licensee notifies the Department in writing at least three days prior to engaging in such activity. Such notification shall indicate the location, period, and type of proposed possession and use within the State, and shall be accompanied by a copy of the pertinent licensing document. If, for a specific case, the 3-day period would impose an undue hardship on the out-of-state licensee, he may, upon application to the Department, obtain permission to proceed sooner;

3. The out-of-state licensee complies with all applicable Rules of the Department, and with all the terms and conditions of his licensing document except any such terms and conditions that may be inconsistent with applicable Rules of the Department;

4. Provided further that the Department may require the out-of-state licensee to supply such other information as the Department may reasonably request; and

5. The out-of-state licensee shall not transfer or dispose of radioactive material possessed or used under the general license provided in (20)(a) except by transfer to a person who is:

(i) Specifically licensed by the Department, the U.S. Nuclear Regulatory Commission, or by another Licensing State to receive such material; or

(ii) Exempt from the requirements for a license for such material under (3)(a).

(b) Notwithstanding the provisions of (20)(a), any person who holds a specific license issued by the U.S. Nuclear Regulatory Commission, a Licensing State, or an Agreement State authorizing the holder to manufacture, transfer, install, or service a device described in (6)(c)1. within areas subject to the jurisdiction of the licensing body is hereby granted a general license to install, transfer, demonstrate, or service such device in this State provided that:

1. Such person shall file a report with the Department within 30 days after the end of each calendar quarter in which any device is transferred to or installed in this State. Each such report shall identify each general licensee to whom such a device is transferred by name and address, the type of device transferred, and the quantity and type of radioactive material contained in the device;

2. The device has been manufactured, labeled, installed, and serviced in accordance with applicable provisions of the specific license issued to such person by the U.S. Nuclear Regulatory Commission, a Licensing State, or an Agreement State;

3. Such person shall assure that any labels required to be affixed to the device under regulations of the authority which licensed the manufacturing of the device bear a statement that "Removal of This Label is Prohibited"; and

4. The holder of the specific license shall furnish to each general licensee to whom he transfers such a device or on whose premises he installs such a device a copy of the general license contained in (6)(c).

(c) The Department may withdraw, limit, or qualify its acceptance of any specific license or equivalent licensing document issued by another agency, or any product distributed pursuant to such licensing document, upon determining that such action is necessary in order to prevent undue hazard to public health and safety, to property, or to the environment.

(21) **Schedules.**

(a) Schedule A.

SCHEDULE A
EXEMPT CONCENTRATIONS

Exempt Concentrations	**Schedule A**		Column II
Element (Atomic Number)	Isotope	Column I Gas Concentration (µCi/mL) (1)	Liquid and Solid Concentration (µCi/mL) (2)
Antimony (51)	Sb 122		3×10^{-4}
	Sb 124		2×10^{-4}
	Sb 125		1×10^{-3}
Argon (18)	Ar 37	1×10^{-3}	
	Ar 41	4×10^{-7}	
Arsenic (33)	As 73		5×10^{-3}
	As 74		5×10^{-4}
	As 76		2×10^{-4}
	As 77		8×10^{-4}
Barium (56)	Ba 131		2×10^{-3}
	Ba 140		3×10^{-4}
Beryllium (4)	Be 7		2×10^{-2}
Bismuth (83)	Bi 206		4×10^{-4}
Bromine (35)	Br 82	4×10^{-7}	3×10^{-3}
Cadmium (48)	Cd 109		2×10^{-3}
	Cd 115m		3×10^{-4}
	Cd 115		3×10^{-4}

Exempt Concentrations	**Schedule A**		Column II
Element (Atomic Number)	Isotope	Column I Gas Concentration (µCi/mL) (1)	Liquid and Solid Concentration (µCi/mL) (2)
Calcium (20)	Ca 45		9×10^{-5}
	Ca 47		5×10^{-4}
Carbon (6)	C 14	1×10^{-6}	8×10^{-3}
Cerium (58)	Ce 141		9×10^{-4}
	Ce 143		4×10^{-4}
	Ce 144		1×10^{-4}
Cesium (55)	Cs 131		2×10^{-2}
	Cs 134m		6×10^{-2}
	Cs 134		9×10^{-5}
Chlorine (17)	Cl 38	9×10^{-7}	4×10^{-3}
Chromium (24)	Cr 51		2×10^{-2}
Cobalt (27)	Co 57		5×10^{-3}
	Co 60		5×10^{-4}
Copper (29)	Cu 64		3×10^{-3}
Dysprosium (66)	Dy 165		4×10^{-3}
	Dy 166		4×10^{-4}
Erbium (68)	Er 169		9×10^{-4}
	Er 171		1×10^{-3}
Europium (63) ($T^{0.5}$ = 9.2 h)	Eu 152		6×10^{-4}
	Eu 155		2×10^{-3}
Fluorine (9)	F 18	2×10^{-6}	8×10^{-3}
Gadolinium (64)	Gd 153		2×10^{-3}
	Gd 159		8×10^{-4}
Gallium (31)	Ga 72		4×10^{-4}
Germanium (32)	Ge 71		2×10^{-2}
Gold (79)	Au 196		2×10^{-3}
	Au 198		5×10^{-4}
	Au 199		2×10^{-3}
Hafnium (72)	Hf 181		7×10^{-4}
Hydrogen (1)	H 3	5×10^{-6}	3×10^{-2}
Indium (49)	In 113m		1×10^{-2}
	In 114m		2×10^{-4}
Iodine (53)	I 126	3×10^{-9}	2×10^{-5}
	I 131	3×10^{-9}	2×10^{-5}
	I 132	8×10^{-8}	6×10^{-4}
	I 133	1×10^{-8}	7×10^{-5}

Exempt Concentrations	**Schedule A**		Column II
Element (Atomic Number)	Isotope	Column I Gas Concentration (µCi/mL) (1)	Liquid and Solid Concentration (µCi/mL) (2)
	I 134	2×10^{-7}	1×10^{-3}
Iridium (77)	Ir 190		2×10^{-3}
	Ir 192		4×10^{-4}
	Ir 194		3×10^{-4}
Iron (26)	Fe 55		8×10^{-3}
	Fe 59		6×10^{-4}
Krypton (36)	Kr 85m	1×10^{-6}	
	Kr 85	3×10^{-6}	
Lanthanum (57)	La 140		2×10^{-4}
Lead (82)	Pb 203		4×10^{-3}
Lutetium (71)	Lu 177		1×10^{-3}
Manganese (25)	Mn 52		3×10^{-4}
	Mn 54		1×10^{-3}
	Mn 56		1×10^{-3}
Mercury (80)	Hg 197m		2×10^{-3}
	Hg 197		3×10^{-3}
	Hg 203		2×10^{-4}
Molybdenum (42)	Mo 99		2×10^{-3}
Neodymium (60)	Nd 147		6×10^{-4}
	Nd 149		3×10^{-3}
Nickel (28)	Ni 65		1×10^{-3}
Niobium (columbium) (41)	Nb 95		1×10^{-3}
	Nb 97		9×10^{-3}
Osmium (76)	Os 185		7×10^{-4}
	Os 191m		3×10^{-2}
	Os 191		2×10^{-3}
	Os 193		6×10^{-4}
Palladium (46)	Pd 103		3×10^{-3}
	Pd 109		9×10^{-4}
Phosphorus (15)	P 32		2×10^{-4}
Platinum (78)	Pt 191		1×10^{-3}
	Pt 193m		1×10^{-2}
	Pt 197m		1×10^{-2}
	Pt 197		1×10^{-3}
Polonium (84)	Po 210		7×10^{-6}
Potassium (19)	K 42		3×10^{-3}

Exempt Concentrations	**Schedule A**		Column II
Element (Atomic Number)	Isotope	Column I Gas Concentration (µCi/mL) (1)	Liquid and Solid Concentration (µCi/mL) (2)
Praseodymium (59)	Pr 142		3×10^{-4}
	Pr 143		5×10^{-4}
Promethium (61)	Pm 147		2×10^{-3}
	Pm 149		4×10^{-4}
Radium (88)	Ra 226		1×10^{-7}
	Ra 228		3×10^{-7}
Rhenium (75)	Re 183		6×10^{-3}
	Re 186		9×10^{-4}
	Re 188		6×10^{-4}
Rhodium (45)	Rh 103m		1×10^{-1}
Rubidium (37)	Rb 86		7×10^{-4}
Ruthenium (44)	Ru 97		4×10^{-3}
	Ru 103		8×10^{-4}
	Ru 105		1×10^{-3}
	Ru 106		1×10^{-4}
Samarium (62)	Sm 153		8×10^{-4}
Scandium (21)	Sc 46		4×10^{-4}
	Sc 47		9×10^{-4}
	Sc 48		3×10^{-3}
Selenium (34)	Se 75		3×10^{-3}
Silicon (14)	Si 31		9×10^{-3}
Silver (47)	Ag 105		1×10^{-3}
	Ag 110m		3×10^{-4}
	Ag 111		4×10^{-4}
Sodium (11)	Na 24		2×10^{-3}
Strontium (38)	Sr 85		1×10^{-3}
	Sr 89		1×10^{-4}
	Sr 91		7×10^{-4}
	Sr 92		7×10^{-4}
Sulfur (16)	S 35	9×10^{-8}	6×10^{-4}
Tantalum (73)	Ta 182		4×10^{-4}
Technetium (43)	Tc 96m		1×10^{-1}
	Tc 96		1×10^{-3}
Tellurium (52)	Te 125m		2×10^{-3}
	Te 127m		6×10^{-4}
	Te 127		3×10^{-3}

Exempt Concentrations Element (Atomic Number)	**Schedule A** Isotope	Column I Gas Concentration (µCi/mL) (1)	Column II Liquid and Solid Concentration (µCi/mL) (2)
	Te 129m		3×10^{-4}
	Te 131m		6×10^{-4}
	Te 132		3×10^{-4}
Terbium (65)	Tb 160		4×10^{-4}
Thallium (81)	Tl 200		4×10^{-3}
	Tl 201		3×10^{-3}
	Tl 202		1×10^{-3}
	Tl 204		1×10^{-3}
Thulium (69)	Tm 170		5×10^{-4}
Tin (50)	Sn 113		9×10^{-4}
	Sn 125		2×10^{-4}
Tungsten (wolfram) (74)	W 181		4×10^{-3}
	W 187		7×10^{-4}
Vanadium (23)	V 48		3×10^{-4}
Xenon (54)	Xe 131m	4×10^{-6}	
	Xe 133	3×10^{-6}	
	Xe 135	1×10^{-6}	
Ytterbium (70)	Yb 175		1×10^{-3}
Yttrium (39)	Y 90		2×10^{-4}
	Y 91m		3×10^{-2}
	Y 91		3×10^{-4}
	Y 92		6×10^{-4}
	Y 93		3×10^{-4}
Zinc (30)	Zn 65		1×10^{-3}
	Zn 69m		7×10^{-4}
	Zn 69		2×10^{-2}
Zirconium (40)	Zr 95		6×10^{-4}
	Zr 97		2×10^{-4}
Beta- and/or gamma-emitting radioactive material not listed above with half-life less than three years		1×10^{-10}	1×10^{-6}

Note: Many radioisotopes disintegrate into isotopes that are also radioactive. In expressing the concentrations in Schedule A, the activity stated is that of the parent isotope and takes into

account the daughters. For purposes of (3)(a) where there is involved a combination of isotopes, the limit for the combination should be derived as follows:

Determine for each isotope in the product the ratio between the concentration present in the product and the exempt concentration established in Schedule A for the specific isotope when not in combination. The sum of such ratios may not exceed "1" (i.e., unity).

EXAMPLE: $\frac{\text{Concentration of Isotope A in Product}}{\text{Exempt concentration of Isotope A}} +$

$\frac{\text{Concentration of Isotope B in Product}}{\text{Exempt concentration of Isotope B}} \leq 1$

Footnotes: [1] Values are given only for those materials normally used as gases.
[2] µCi/gm for solids.

(b) Schedule B.

SCHEDULE B
EXEMPT QUANTITIES

Schedule B – Exempt Quantities Radioactive Material	Exempt Quantity (Microcuries)
Antimony-122 (Sb 122)	100
Antimony-124 (Sb 124)	10
Antimony-125 (Sb 125)	10
Arsenic-73 (As 73)	100
Arsenic-74 (As 74)	10
Arsenic-76 (As 76)	10
Arsenic-77 (As 77)	100
Barium-131 (Ba 131)	10
Barium-133 (Ba 133)	10
Barium-140 (Ba 140)	10
Bismuth-210 (Bi 210)	1
Bromine-82 (Br 82)	10
Cadmium-109 (Cd 109)	10
Cadmium-115m (Cd 115m)	10
Cadmium-115 (Cd 115)	100
Calcium-45 (Ca 45)	10
Calcium-47 (Ca 47)	10
Carbon-14 (C 14)	100
Cerium-141 (Ce 141)	100
Cerium-143 (Ce 143)	100
Cerium-144 (Ce 144)	1

Schedule B – Exempt Quantities Radioactive Material	Exempt Quantity (Microcuries)
Cesium-129 (Cs 129)	100
Cesium-131 (Cs 131)	1,000
Cesium-134m (Cs 134m)	100
Cesium-134 (Cs 134)	1
Cesium-135 (Cs 135)	10
Cesium-136 (Cs 136)	10
Cesium-137 (Cs 137)	10
Chlorine-36 (Cl 36)	10
Chlorine-38 (Cl 38)	10
Chromium-51 (Cr 51)	1,000
Cobalt-57 (Co 57)	100
Cobalt-58m (Co 58m)	10
Cobalt-58 (Co 58)	10
Cobalt-60 (Co 60)	1
Copper-64 (Cu 64)	100
Dysprosium-165 (Dy 165)	10
Dysprosium-166 (Dy 166)	100
Erbium-169 (Er 169)	100
Erbium-171 (Er 171)	100
Europium-152 (Eu 152) 9.2h	100
Europium-152 (Eu 152) 13 yr	1
Europium-154 (Eu 154)	1
Europium-155 (Eu 155)	10
Fluorine-18 (F 18)	1,000
Gadolinium-153 (Gd 153)	10
Gadolinium-159 (Gd 159)	100
Gallium-67 (Ga 67)	100
Gallium-72 (Ga 72)	10
Germanium-68 (Ge 68)	10
Germanium-71 (Ge 71)	100
Gold-195 (Au 195)	10
Gold-198 (Au 198)	100
Gold-199 (Au 199)	100
Hafnium-181 (Hf 181)	10
Holmium-166 (Ho 166)	100
Hydrogen-3 (H 3)	1,000
Indium-111 (In 111)	100
Indium-113m (In 113m)	100

Schedule B – Exempt Quantities Radioactive Material	Exempt Quantity (Microcuries)
Indium-114m (In 114m)	10
Indium-115m (In 115m)	100
Indium-115 (In 115)	10
Iodine-123 (I 123)	100
Iodine-125 (I 125)	1
Iodine-126 (I 126)	1
Iodine-129 (I 129)	0.1
Iodine-131 (I 131)	1
Iodine-132 (I 132)	10
Iodine-133 (I 133)	1
Iodine-134 (I 134)	10
Iodine-135 (I 135)	10
Iridium-192 (Ir 192)	10
Iridium-194 (Ir 194)	100
Iron-52 (Fe 52)	10
Iron-55 (Fe 55)	100
Iron-59 (Fe 59)	10
Krypton-85 (Kr 85)	100
Krypton-87 (Kr 87)	100
Lanthanum-140 (La 140)	10
Lutetium-177 (Lu 177)	100
Manganese-52 (Mn 52)	10
Manganese-54 (Mn 54)	10
Manganese-56 (Mn 56)	10
Mercury-197m (Hg 197m)	100
Mercury-197 (Hg 197)	100
Mercury-203 (Hg 203)	10
Molybdenum-99 (Mo 99)	100
Neodymium-147 (Nd 147)	100
Neodymium-149 (Nd 149)	100
Nickel-59 (Ni 59)	100
Nickel-63 (Ni 63)	10
Nickel-65 (Ni 65)	100
Niobium-93m (Nb 93m)	10
Niobium-95 (Nb 95)	10
Niobium-97 (Nb 97)	10
Osmium-185 (Os 185)	10
Osmium-191m (Os 191m)	100

Schedule B – Exempt Quantities Radioactive Material	Exempt Quantity (Microcuries)
Osmium-191 (Os 191)	100
Osmium-193 (Os 193)	100
Palladium-103 (Pd 103)	100
Palladium-109 (Pd 109)	100
Phosphorus-32 (P 32)	10
Platinum-191 (Pt 191)	100
Platinum-193m (Pt 193m)	100
Platinum-193 (Pt 193)	100
Platinum-197m (Pt 197m)	100
Platinum-197 (Pt 197)	100
Polonium-210 (Po 210)	0.1
Potassium-42 (K 42)	10
Potassium-43 (K 43)	10
Praseodymium-142 (Pm 142)	100
Praseodymium-143 (Pr 143)	100
Promethium-147 (Pm 147)	10
Promethium-149 (Pm 149)	10
Rhenium-186 (Re 186)	100
Rhenium-188 (Re 188)	100
Rhodium-103m (Rh 103m)	100
Rhodium-105 (Rh 105)	100
Rubidium-81 (Rb 81)	10
Rubidium-86 (Rb 86)	10
Rubidium-87 (Rb 87)	10
Ruthenium-97 (Ru 97)	100
Ruthenium-103 (Ru 103)	10
Ruthenium-105 (Ru 105)	10
Ruthenium-106 (Ru 106)	1
Samarium-151 (Sm 151)	10
Samarium-153 (Sm 153)	100
Scandium-46 (Sc 46)	10
Scandium-47 (Sc 47)	100
Scandium-48 (Sc 48)	10
Selenium-75 (Se 75)	10
Silicon-31 (Si 31)	100
Silver-105 (Ag 105)	10
Silver-110m (Ag 110m)	1
Silver-111 (Ag 111)	100

Schedule B – Exempt Quantities Radioactive Material	Exempt Quantity (Microcuries)
Sodium-22 (Na 22)	10
Sodium-24 (Na 24)	10
Strontium-85 (Sr 85)	10
Strontium-89 (Sr 89)	1
Strontium-90 (Sr 90)	0.1
Strontium-91 (Sr 91)	10
Strontium-92 (Sr 92)	10
Sulphur-35 (S 35)	100
Tantalum-182 (Ta 182)	10
Technetium-96 (Tc 96)	10
Technetium-97m (Tc 97m)	100
Technetium-97 (Tc 97)	100
Technetium-99m (Tc 99m)	100
Technetium-99 (Tc 99)	10
Tellurium-125m (Te 125m)	10
Tellurium-127m (Te 127m)	10
Tellurium-127 (Te 127)	100
Tellurium-129m (Te 129m)	10
Tellurium-129 (Te 129)	100
Tellurium-131m (Te 131m)	10
Tellurium-132 (Te 132)	10
Terbium-160 (Tb 160)	10
Thallium-200 (Tl 200)	100
Thallium-201 (Tl 201)	100
Thallium-202 (Tl 202)	100
Thallium-204 (Tl 204)	10
Thulium-170 (Tm 170)	10
Thulium-171 (Tm 171)	10
Tin 113-(Sn 113)	10
Tin 125-(Sn 125)	10
Tungsten-181 (W 181)	10
Tungsten-185 (W 185)	10
Tungsten-187 (W 187)	100
Vanadium-48 (V 48)	10
Xenon-131m (Xe 131m)	1,000
Xenon-133 (Xe 133)	100
Xenon-135 (Xe 135)	100
Ytterbium-175 (Yb 175)	100

Schedule B – Exempt Quantities Radioactive Material	Exempt Quantity (Microcuries)
Yttrium-87 (Y 87)	10
Yttrium-88 (Y 88)	10
Yttrium-90 (Y 90)	10
Yttrium-91 (Y 91)	10
Yttrium-92 (Y 92)	100
Yttrium-93 (Y 93)	100
Zinc-65 (Zn 65)	10
Zinc-69m (Zn 69m)	100
Zinc-69 (Zn 69)	1,000
Zirconium-93 (Zr 93)	10
Zirconium-95 (Zr 95)	10
Zirconium-97 (Zr 97)	10
Any radioactive material not listed above other than alpha- emitting radioactive material	0.1

(c) Schedule C.

SCHEDULE C
LIMITS FOR BROAD LICENSES

Schedule C – Limits For Broad Licenses		
Radioactive Materials	Column I (Curies)	Column II (Curies)
Antimony-122 (Sb 122)	1	0.01
Antimony-124 (Sb 124)	1	0.01
Antimony-125 (Sb 125)	1	0.01
Arsenic-73 (As 73)	10	0.1
Arsenic-74 (As 74)	1	0.01
Arsenic-76 (As 76)	1	0.01
Arsenic-77 (As 77)	10	0.1
Barium-131 (Ba 131)	10	0.1
Barium-140 (Ba 140)	1	0.01
Beryllium-7 (Be 7)	10	0.1
Bismuth-210 (Bi 210)	0.1	0.001
Bromine-82 (Br 82)	10	0.1
Cadmium-109 (Cd 109)	1	0.01
Cadmium-115m (Cd 115m)	1	0.01
Cadmium-115 (Cd 115)	10	0.1
Calcium-45 (Ca 45)	1	0.01
Calcium-47 (Ca 47)	10	0.1
Carbon-14 (C 14)	100	1.0
Cerium-141 (Ce 141)	10	0.1
Cerium-143 (Ce 143)	10	0.1
Cerium-144 (Ce 144)	0.1	0.001
Cesium-131 (Cs 131)	100	1.0
Cesium-134m (Cs 134m)	100	1.0
Cesium-134 (Cs 134)	0.1	0.001
Cesium-135 (Cs 135)	1	0.01
Cesium-136 (Cs 136)	10	0.1
Cesium-137 (Cs 137)	0.1	0.001
Chlorine-36 (Cl 36)	0.01	0.001
Chlorine-38 (Cl 38)	100	1.0
Chromium-51 (Cr 51)	100	1.0
Cobalt-57 (Co 57)	10	0.1
Cobalt-58m (Co 58m)	100	1.0
Cobalt-58 (Co 58)	1	0.01
Cobalt-60 (Co 60)	0.1	0.001

Schedule C – Limits For Broad Licenses

Radioactive Materials	Column I (Curies)	Column II (Curies)
Copper-64 (Cu 64)	10	0.1
Dysprosium-165 (Dy 165)	100	1.0
Dysprosium-166 (Dy 166)	10	0.1
Erbium-169 (Er 169)	10	0.1
Erbium-171 (Er 171)	10	0.1
Europium-152 (Eu 152) 9.2h	10	0.1
Europium-152 (Eu 152) 13 yr	0.1	0.001
Europium-154 (Eu 154)	0.1	0.001
Europium-155 (Eu 155)	1	0.01
Fluorine-18 (F 18)	100	1.0
Gadolinium-153 (Gd 153)	1	0.01
Gadolinium-159 (Gd 159)	10	0.1
Gallium-72 (Ga 72)	10	0.1
Germanium-71 (Ge 71)	100	1.0
Gold-198 (Au 198)	10	0.1
Gold-199 (Au 199)	10	0.1
Hafnium-181 (Hf 181)	1	0.01
Holmium-166 (Ho 166)	10	0.1
Hydrogen-3 (H 3)	100	1.0
Indium-113m (In 113m)	100	1.0
Indium-114m (In 114m)	1	0.01
Indium-115m (In 115m)	100	1.0
Indium-115 (In 115)	1	0.01
Iodine-125 (I 125)	0.1	0.001
Iodine-126 (I 126)	0.1	0.001
Iodine-129 (I 129)	0.1	0.001
Iodine-131 (I 131)	0.1	0.001
Iodine-132 (I 132)	10	0.1
Iodine-133 (I 133)	1	0.01
Iodine-134 (I 134)	10	0.1
Iodine-135 (I 135)	1	0.01
Iridium-192 (Ir 192)	1	0.01
Iridium-194 (Ir 194)	10	0.1
Iron-55 (Fe 55)	10	0.1
Iron-59 (Fe 59)	1	0.01
Krypton-85 (Kr 85)	100	1.0
Krypton-87 (Kr 87)	10	0.1
Lanthanum-140 (La 140)	1	0.01

Schedule C – Limits For Broad Licenses

Radioactive Materials	Column I (Curies)	Column II (Curies)
Lutetium-177 (Lu 177)	10	0.1
Manganese-52 (Mn 52)	1	0.01
Manganese-54 (Mn 54)	1	0.01
Manganese-56 (Mn 56)	10	0.1
Mercury-197m (Hg 197m)	10	0.1
Mercury-197 (Hg 197)	10	0.1
Mercury-203 (Hg 203)	1	0.01
Molybdenum-99 (Mo 99)	10	0.1
Neodymium-147 (Nd 147)	10	0.1
Neodymium-149 (Nd 149)	10	0.1
Nickel-59 (Ni 59)	10	0.1
Nickel-63 (Ni 63)	1	0.01
Nickel-65 (Ni 65)	10	0.1
Niobium-93m (Nb 93m)	1	0.01
Niobium-95 (Nb 95)	1	0.01
Niobium-97 (Nb 97)	100	1.0
Osmium-185 (Os 185)	1	0.01
Osmium-191m (Os 191m)	100	1.0
Osmium-191 (Os 191)	10	0.1
Osmium-193 (Os 193)	10	0.1
Palladium-103 (Pd 103)	10	0.1
Palladium-109 (Pd 109)	10	0.1
Phosphorus-32 (P 32)	1	0.01
Platinum-191 (Pt 191)	10	0.1
Platinum-193m (Pt 193m)	100	1.0
Platinum-193 (Pt 193)	10	0.1
Platinum-197m (Pt 197m)	100	1.0
Platinum-197 (Pt 197)	10	0.1
Polonium-210 (Po 210)	0.01	0.0001
Potassium-42 (K 42)	1	0.01
Praseodymium-142 (Pm 142)	10	0.1
Praseodymium-143 (Pr 143)	10	0.1
Promethium-147 (Pm 147)	1	0.01
Promethium-149 (Pm 149)	10	0.1
Radium-226	0.01	0.0001
Rhenium-186 (Re 186)	10	0.1
Rhenium-188 (Re 188)	10	0.1
Rhodium-103m (Rh 103m)	1,000	0

Schedule C – Limits For Broad Licenses

Radioactive Materials	Column I (Curies)	Column II (Curies)
Rhodium-105 (Rh 105)	10	0.1
Rubidium-86 (Rb 86)	1	0.01
Rubidium-87 (Rb 87)	1	0.01
Ruthenium-97 (Ru 97)	100	1.0
Ruthenium-103 (Ru 103)	1	0.01
Ruthenium-105 (Ru 105)	10	0.1
Ruthenium-106 (Ru 106)	0.1	0.001
Samarium-151 (Sm 151)	1	0.01
Samarium-153 (Sm 153)	10	0.1
Scandium-46 (Sc 46)	1	0.01
Scandium-47 (Sc 47)	10	0.1
Scandium-48 (Sc 48)	1	0.01
Selenium-75 (Se 75)	1	0.01
Silicon-31 (Si 31)	10	0.1
Silver-105 (Ag 105)	1	0.01
Silver-110m (Ag 110m)	0.1	0.001
Silver-111 (Ag 111)	10	0.1
Sodium-22 (Na 22)	0.1	0.001
Sodium-24 (Na 24)	1	0.01
Strontium-85m (Sr 85m)	1,000	10.0
Strontium-85 (Sr 85)	1	0.01
Strontium-89 (Sr 89)	1	0.01
Strontium-90 (Sr 90)	0.01	0.0001
Strontium-91 (Sr 91)	10	0.1
Strontium-92 (Sr 92)	10	0.1
Sulphur-35 (S 35)	10	0.1
Tantalum-182 (Ta 182)	1	0.01
Technetium-96 (Tc 96)	10	0.1
Technetium-97m (Tc 97m)	10	0.1
Technetium-97 (Tc 97)	10	0.1
Technetium-99m (Tc 99m)	100	1.0
Technetium-99 (Tc 99)	1	0.01
Tellurium-125m (Te 125m)	1	0.01
Tellurium-127m (Te 127m)	1	0.01
Tellurium-127 (Te 127)	10	0.1
Tellurium-129m (Te 129m)	1	0.01
Tellurium-129 (Te 129)	100	1.0
Tellurium-131m (Te 131m)	10	0.1

Schedule C – Limits For Broad Licenses		
Radioactive Materials	Column I (Curies)	Column II (Curies)
Tellurium-132 (Te 132)	1	0.01
Terbium-160 (Tb 160)	1	0.01
Thallium-200 (Tl 200)	10	0.1
Thallium-201 (Tl 201)	10	0.1
Thallium-202 (Tl 202)	10	0.1
Thallium-204 (Tl 204)	1	0.01
Thulium-170 (Tm 170)	1	0.01
Thulium-171 (Tm 171)	1	0.01
Tin 113-(Sn 113)	1	0.01
Tin 125-(Sn 125)	1	0.01
Tungsten-181 (W 181)	1	0.01
Tungsten-185 (W 185)	1	0.01
Tungsten-187 (W 187)	10	0.1
Vanadium-48 (V 48)	1	0.01
Xenon-131m (Xe 131m)	1,000	0
Xenon-133 (Xe 133)	100	1.0
Xenon-135 (Xe 135)	100	1.0
Ytterbium-175 (Yb 175)	10	0.1
Yttrium-90 (Y 90)	1	0.1
Yttrium-91 (Y 91)	1	0.1
Yttrium-92 (Y 92)	10	0.1
Yttrium-93 (Y 93)	1	0.01
Zinc-65 (Zn 65)	1	0.01
Zinc-69m (Zn 69m)	10	0.1
Zinc-69 (Zn 69)	100	1.0
Zirconium-93 (Zr 93)	1	0.01
Zirconium-95 (Zr 95)	1	0.01
Zirconium-97 (Zr 97)	1	0.01
Any radioactive material other than source material, or alpha-emitting radioactive material not listed above.	0.1	0.001

(d) Schedule D. Criteria Relating to Use of Financial Tests and Parent Company Guarantees for Providing Reasonable Assurance of Funds for Decommissioning.

1. Introduction. An applicant or licensee may provide reasonable assurance of the availability of funds for decommissioning based on obtaining a parent company guarantee that funds will be available for decommissioning costs and on a demonstration that the parent company passes a

financial test. This schedule establishes criteria for passing the financial test and for obtaining the parent company guarantee.

2. Financial Test. To pass the financial test, the parent company must meet the criteria of either (21)(d)2.(i) or (21)(d)2.(ii) as follows:

(i) The parent company must have:

(I) two of the following three ratios: a ratio of total liabilities to net worth less than 2.0; a ratio of the sum of net income plus depreciation, depletion, and amortization to total liabilities greater than 0.1; and a ratio of current assets to current liabilities greater than 1.5;

(II) Net working capital and tangible net worth each at least six times the current decommissioning cost estimates (or prescribed amount if a certification is used);

(III) Tangible net worth of at least $10 million; and

(IV) Assets located in the United States amounting to at least 90 percent of total assets or at least six times the current decommissioning cost estimates (or prescribed amount if a certification is used).

(ii) The parent company must have:

(I) A current rating for its most recent bond issuance of AAA, AA, A, or BBB as issued by Standard and Poor's or Aaa, Aa, A, or Baa as issued by Moody's;

(II) Tangible net worth each at least six times the current decommissioning cost estimates for the total of all facilities or parts thereof (or prescribed amount if a certification is used);

(III) Tangible net worth of at least $10 million; and

(IV) Assets located in the United States amounting to at least 90 percent of total assets or at least six times the current decommissioning cost estimates for the total of all facilities or parts thereof (or prescribed amount if a certification is used).

(iii) The parent company's independent certified public accountant must have compared the data used by the parent company in the financial test, which is derived from the independently-audited, year-end financial statements for the latest fiscal year, with the amounts in such financial statement. In connection with that procedure the licensee shall inform the Department within 90 days of any matters coming to the auditor's attention that cause the auditor to believe that the data specified in the financial test should be adjusted and that the company no longer passes the test.

(iv) After the initial financial test, the parent company must repeat the passage of the test within 120 days after the close of each succeeding fiscal year. If the parent company no longer meets the requirements, as appropriate, of either (21)(d)2.(i) or (21)(d)2.(ii), the licensee must send notice to the Department of intent to establish alternate financial assurance as specified in the Department's Regulations. The notice must be sent by certified mail within 90 days after the end of the fiscal year for which the year-end financial data show that the parent company no longer meets the financial test requirements. The licensee must provide alternate financial assurance within 120 days after the end of such fiscal year.

3. Parent Company Guarantee. The terms of a parent company guarantee which an applicant or licensee obtains must provide that:

(i) The parent company guarantee shall remain in force unless the guarantor sends notice of cancellation by certified mail to the licensee and the Department. Cancellation may not occur, however, during the 120 days beginning on the date of receipt of the notice of cancellation by both the licensee and the Department, as evidenced by the return receipts;

(ii) If the licensee fails to provide alternate financial assurance as specified in the Department's Regulations within 90 days after receipt by the licensee and the Department of a notice of cancellation of the parent company guarantee from the guarantor, the guarantor shall provide such alternative financial assurance in the name of the licensee;

(iii) The parent company guarantee and financial test provisions must remain in effect until the Department has terminated the license; and

(iv) If a trust is established for decommissioning costs, the trustee and trust must be acceptable to the Department. An acceptable trustee includes an appropriate State or Federal government agency or an entity which has the authority to act as a trustee and whose trust operations are regulated and examined by a Federal or State agency.

(e) Schedule E.

SCHEDULE E
QUANTITIES OF RADIOACTIVE MATERIALS REQUIRING CONSIDERATION OF THE NEED FOR AN EMERGENCY PLAN FOR RESPONDING TO A RELEASE

Schedule E – Emergency Plan For Responding to a Release		
Radioactive Material [1]	Release Fraction	Quantity (Curies)
Actinium-228	0.001	4,000
Americium-241	0.001	2
Americium-242	0.001	2
Americium-243	0.001	2
Antimony-124	0.01	4,000
Antimony-126	0.01	6,000
Barium-133	0.01	10,000
Barium-140	0.01	30,000
Bismuth-207	0.01	5,000
Bismuth-210	0.01	600
Cadmium-109	0.01	1,000
Cadmium-113	0.01	80
Calcium-45	0.01	20,000
Californium-252	0.001	9 (20 mg)
Carbon-14 (Non Carbon dioxide)	0.01	50,000
Cerium-141	0.01	10,000
Cerium-144	0.01	300
Cesium-134	0.01	2,000
Cesium-137	0.01	3,000
Chlorine-36	0.5	100
Chromium-51	0.01	300,000
Cobalt-60	0.001	5,000
Copper-64	0.01	200,000
Curium-242	0.001	60
Curium-243	0.001	3
Curium-244	0.001	4
Curium-245	0.001	2
Europium-152	0.01	500
Europium-154	0.01	400
Europium-155	0.01	3,000
Germanium-68	0.01	2,000

Schedule E – Emergency Plan For Responding to a Release

Radioactive Material [1]	Release Fraction	Quantity (Curies)
Gadolinium-153	0.01	5,000
Gold-198	0.01	30,000
Hafnium-172	0.01	400
Hafnium-181	0.01	7,000
Holmium-166m	0.01	100
Hydrogen-3	0.5	20,000
Iodine-125	0.5	10
Iodine-131	0.5	10
Indium-114m	0.01	1,000
Iridium-192	0.001	40,000
Iron-55	0.01	40,000
Iron-59	0.01	7,000
Krypton-85	1.0	6,000,000
Lead-210	0.01	8
Manganese-56	0.01	60,000
Mercury-203	0.01	10,000
Molybdenum-99	0.01	30,000
Neptunium-237	0.001	2
Nickel-63	0.01	20,000
Niobium-94	0.01	300
Phosphorus-32	0.5	100
Phosphorus-33	0.5	1,000
Polonium-210	0.01	10
Potassium-42	0.01	9,000
Promethium-145	0.01	4,000
Promethium-147	0.01	4,000
Radium-226	0.001	100
Ruthenium-106	0.01	200
Samarium-151	0.01	4,000
Scandium-46	0.01	3,000
Selenium-75	0.01	10,000
Silver-110m	0.01	1,000
Sodium-22	0.01	9,000
Sodium-24	0.01	10,000
Strontium-89	0.01	3,000
Strontium-90	0.01	90
Sulfur-35	0.5	900
Technetium-99	0.01	10,000

Schedule E – Emergency Plan For Responding to a Release

Radioactive Material [1]	Release Fraction	Quantity (Curies)
Technetium-99m	0.01	400,000
Tellurium-127m	0.01	5,000
Tellurium-129m	0.01	5,000
Terbium-160	0.01	4,000
Thulium-170	0.01	4,000
Tin-13	0.01	10,000
Tin-123	0.01	3,000
Tin-126	0.01	1,000
Titanium-44	0.01	100
Vanadium-48	0.01	7,000
Xenon-133	1.0	900,000
Yttrium-91	0.01	2,000
Zinc-65	0.01	5,000
Zirconium-93	0.01	400
Zirconium-95	0.01	5,000
Any other beta-/gamma-emitter	0.01	10,000
Mixed fission products	0.01	1,000
Mixed Corrosion Products	0.01	10,000
Contaminated equipment, beta/gamma	0.001	10,000
Irradiated material, any form other than solid noncombustible	0.01	1,000
Irradiated material, solid noncombustible	0.001	10,000
Mixed radioactive waste, beta/gamma	0.01	1,000
Packaged mixed waste, beta/gamma[2]	0.001	10,000
Any other alpha-emitter	0.001	2
Contaminated equipment, alpha	0.0001	20
Packaged waste, alpha[2]	0.0001	20

Footnotes:

[1] For combinations of radioactive materials listed above, consideration of the need for an emergency plan is required if the sum of the ratios of the quantity of each radioactive material authorized to the quantity listed for that material in Schedule E exceeds one.

[2] Waste packaged in Type B containers does not require an emergency plan.

(f) Schedule F

SCHEDULE F
QUANTITIES FOR USE WITH DECOMMISSIONING

Schedule F – Quantities for Use With Decommissioning	
Radioactive Material	Quantity (Microcurie [a])
Americium-241	0.01
Antimony-122	100
Antimony-124	10
Antimony-125	10
Arsenic-73	100
Arsenic-74	10
Arsenic-76	10
Arsenic-77	100
Barium-131	10
Barium-133	10
Barium-140	10
Bismuth-210	1
Bromine-82	10
Cadmium-109	10
Cadmium-115m	10
Cadmium-115	100
Calcium-45	10
Calcium-47	10
Carbon-14	100
Cerium-141	100
Cerium-143	100
Cerium-144	1
Cesium-131	1,000
Cesium-134m	100
Cesium-134	1
Cesium-135	10
Cesium-136	10
Cesium-137	10
Chlorine-36	10
Chlorine-38	10
Chromium-51	1,000

[a] To convert µCi to kBq, multiply the µCi value by 37.

Schedule F – Quantities for Use With Decommissioning

Radioactive Material	Quantity (Microcurie [(a)])
Cobalt-58m	10
Cobalt-58	10
Cobalt-60	1
Copper-64	100
Dysprosium-165	10
Dysprosium-166	100
Erbium-169	100
Erbium-171	100
Europium-152 (9.2 h)	100
Europium-152 (13 yr)	1
Europium-154	1
Europium-155	10
Florine-18	1,000
Gadolinium-153	10
Gadolinium-159	100
Gallium-72	10
Germanium-71	0
Hafnium-181	10
Holmium-166	100
Hydrogen-3	1,000
Indium-113m	100
Indium-114m	10
Indium-115m	100
Indium-115	10
Iodine-125	1
Iodine-126	1
Iodine-129	0.1
Iodine-131	1
Iodine-132	10
Iodine-133	1
Iodine-134	10
Iodine-135	10
Iridium-192	10
Iridium-194	100
Iron-55	100
Iron-59	10
Krypton-85	100
Krypton-87	10

Schedule F – Quantities for Use With Decommissioning

Radioactive Material	Quantity (Microcurie [(a)])
Lanthanum-140	10
Lutetium-177	100
Manganese-52	10
Manganese-54	10
Manganese-56	10
Mercury-197m	100
Mercury-197	100
Mercury-203	10
Molybdenum-99	100
Neodymium-147	100
Neodymium-149	100
Nickel-59	100
Nickel-63	10
Nickel-65	100
Niobium-93m	10
Niobium-95	10
Niobium-97	10
Osmium-185	10
Osmium-191m	100
Osmium-191	100
Osmium-193	100
Palladium-103	100
Palladium-109	100
Phosphorus-32	10
Platinum-191	100
Platinum-193m	100
Platinum-193	100
Platinum-197m	100
Platinum-197	100
Plutonium-239	0.01
Polonium-210	0.1
Potassium-42	10
Praseodymium-142	100
Praseodymium-143	100
Promethium-147	10
Promethium-149	10
Radium-226	0.01
Rhenium-186	100

Schedule F – Quantities for Use With Decommissioning

Radioactive Material	Quantity (Microcurie [(a)])
Rhenium-188	100
Rhodium-103m	100
Rhodium-105	100
Rubidium-86	10
Rubidium-87	10
Ruthenium-97	100
Ruthenium-103	10
Ruthenium-105	10
Ruthenium-106	1
Samarium-151	10
Samarium-153	100
Scandium-46	10
Scandium-47	100
Scandium-48	10
Selenium-75	10
Silicon-31	100
Silver-105	10
Silver-110m	1
Silver-111	100
Sodium-22	1
Sodium-24	10
Strontium-85	10
Strontium-89	1
Strontium-90	0.1
Strontium-91	10
Strontium-92	10
Sulfur-35	100
Tantalum-182	10
Technetium-96	10
Technetium-97m	100
Technetium-97	100
Technetium-99m	100
Technetium-99	10
Tellurium-125m	10
Tellurium-127m	10
Tellurium-127	100
Tellurium-129m	10
Tellurium-129	100

Schedule F – Quantities for Use With Decommissioning

Radioactive Material	Quantity (Microcurie [(a)/])
Tellurium-131m	10
Tellurium-132	10
Terbium-160	10
Thallium-200	100
Thallium-201	100
Thallium-202	100
Thallium-204	10
Thorium (natural)[b/]	100
Thulium-170	10
Thulium-171	10
Tin-113	10
Tin-125	10
Tungsten-181	10
Tungsten-185	10
Tungsten-187	100
Uranium (natural)[c/]	100
Uranium-233	0.01
Uranium-234	0.01
Uranium-235	0.01
Vanadium-48	10
Xenon-131m	1,000
Xenon-133	100
Xenon-135	100
Ytterbium-175	100
Yttrium-90	10
Yttrium-91	10
Yttrium-92	100
Yttrium-93	100
Zinc-65	10
Zinc-69m	100
Zinc-69	1,000
Zirconium-93	10
Zirconium-95	10
Zirconium-97	10

[b/] Based on alpha disintegration rate of Th-232, Th-230 and their daughter products.

[c/] Based on alpha disintegration rate of U-238, U-234, and U-235.

Schedule F – Quantities for Use With Decommissioning	
Radioactive Material	Quantity (Microcurie [(a)/])
Any alpha emitting radionuclide not listed above or mixtures of alpha emitters of unknown composition.	0.01
Any radionuclide other than alpha emitting radionuclides, not listed above or mixtures of beta emitters of unknown composition.	0.10

(g) Schedule G. Criteria Relating to Use of Financial Tests and Self Guarantees for Providing Reasonable Assurance of Funds for Decommissioning.

1. Introduction

An applicant or licensee may provide reasonable assurance of the availability of funds for decommissioning based on furnishing its own guarantee that funds will be available for decommissioning costs and on a demonstration that the company passes the financial test of (21)(g)2. The terms of the self-guarantee are in (21)(g)3. This schedule establishes criteria for passing the financial test for the self-guarantee and establishes the terms for a self-guarantee.

2. Financial Test

(i) To pass the financial test, a company must meet all of the following criteria:

(I) Tangible net worth at least ten times the total current decommissioning cost estimate for the total of all facilities or parts thereof (or the current amount required if certification is used) for all decommissioning activities for which the company is responsible as self-guaranteeing licensee.

(II) Assets located in the United States amounting to at least 90 percent of total decommissioning cost estimate for the total of all facilities or parts thereof (or the current amount required if certification is used) for all decommissioning activities for which the company is responsible as self-guaranteeing licensee.

(III) A current rating for its most recent bond issuance of AAA, AA, or A as issued by Standard and Poors (S&P), or Aaa, Aa, or A as issued by Moodys.

(ii) To pass the financial test, a company must meet all of the following additional requirements:

(I) The company must have at least one class of equity securities registered under the Security Exchange Act of 1934.

(II) The company's independent certified public accountant must have compared the data used by the company in the financial test, which is derived from the independently audited, year-end financial statements for the latest fiscal year, with the amounts in such financial statement. In connection with that procedure, the licensee shall inform the Department within 90 days of any matters coming to the attention of the auditor that cause the auditor to believe that the data

specified in the financial test should be adjusted and that the company no longer passes the test.

(III) After the initial financial test, the company must repeat passage of the test within 90 days after the close of each succeeding fiscal year.

(iii) If the licensee no longer meets the requirements of (21)(g)2.(i), the licensee must send immediate notice to the Department of its intent to establish alternate financial assurance as specified in the Department's regulations within 120 days of such notice.

3. Company Self-Guarantee

The terms of a self-guarantee which an applicant or licensee furnishes must provide that:

(i) The guarantee will remain in force unless the licensee sends notice of cancellation by certified mail to the Department. Cancellation may not occur, however, during the 120 days beginning on the date of receipt of the notice of cancellation by the Department, as evidence by the return receipt.

(ii) The licensee shall provide alternative financial assurance as specified in the Department's regulations within 90 days following receipt by the Department of a notice of cancellation of the guarantee.

(iii) The guarantee and financial test provisions must remain in effect until the Department has terminated the license or until another financial assurance method acceptable to the Department has been put in effect by the licensee.

(iv) The licensee will promptly forward to the Department and the licensee's independent auditor all reports covering the latest fiscal year filed by the licensee with the Securities and Exchange Commission pursuant to the requirements of Section 13 of the Securities and Exchange Act of 1934.

(v) If, at any time, the licensee's most recent bond issuance ceases to be rated in any category of "A" or above by either Standard and Poors or Moodys, the licensee will provide notice in writing of such fact to the Department within 20 days after publication of the change by the rating service. If the licensee's most recent bond issuance ceases to be rated in any category of A or above by both Standard and Poors and Moodys, the licensee no longer meets the requirements of (21)(g)2.(i).

(vi) The applicant or licensee must provide to the Department a written guarantee (a written commitment by a corporate officer) which states that the licensee will fund and carry out the required decommissioning activities or, upon issuance of an order by the Department, the licensee will set up and fund a trust in the amount of the current cost estimates for decommissioning.

(h) Schedule H. Criteria Relating to Use of Financial Tests and Self-Guarantee For Providing Reasonable Assurance of Funds For Decommissioning by Nonprofit Colleges, Universities, and Hospitals.

1. Introduction

An applicant or licensee may provide reasonable assurance of the availability of funds for decommissioning based on furnishing its own guarantee that funds will be available for decommissioning costs and on a demonstration that the applicant or licensee passes the financial test of (h)2. The terms of the self-guarantee are in (h)3. This schedule establishes criteria for passing the financial test for the self-guarantee and establishes the terms for a self-guarantee.

2. Financial Test

(i) For colleges and universities, to pass the financial test a college or university must meet either the criteria in (h)2.(i)(I) or the criteria in (h)2.(i)(II).

(I) For applicants or licensees that issue bonds, a current rating for its most recent uninsured, uncollateralized, and unencumbered bond issuance of AAA, AA, or A as issued by Standard and Poors (S&P) or Aaa, Aa, or A as issued by Moodys.

(II) For applicants or licensees that do not issue bonds, unrestricted endowment consisting of assets located in the United States of at least $50 million, or at least 30 times the total current decommissioning cost estimate (or the current amount required if certification is used), whichever is greater, for all decommissioning activities for which the college or university is responsible as a self-guaranteeing licensee.

(ii) For hospitals, to pass the financial test a hospital must meet either the criteria in (h)2.(ii)(I) or the criteria in (h)2.(ii)(II):

(I) For applicants or licensees that issue bonds, a current rating for its most recent uninsured, uncollateralized, and unencumbered bond issuance of AAA, AA, or A as issued by Standard and Poors (S&P) or Aaa, Aa, or A as issued by Moodys.

(II) For applicants or licensees that do not issue bonds, all the following tests must be met:

I. (Total Revenues less total expenditures) divided by total revenues must be equal to or greater than 0.04.

II. Long term debt divided by net fixed assets must be less than or equal to 0.67.

III. (Current assets and depreciation fund) divided by current liabilities must be greater than or equal to 2.55.

IV. Operating revenues must be at least 100 times the total current decommissioning cost estimate (or the current amount required if certification is used) for all decommissioning activities for which the hospital is responsible as a self-guaranteeing license.

(iii) In addition, to pass the financial test, a licensee must meet all the following requirements:

(I) The licensee's independent certified public accountant must have compared the data used by the licensee in the financial test, which is required to be derived from the independently audited year-end financial statements, based on United States generally accepted accounting practices, for the latest fiscal year, with the amounts in such financial statement. In connection with that procedure, the licensee shall inform the Department within 90 days of any matters

coming to the attention of the auditor that cause the auditor to believe that the data specified in the financial test should be adjusted and that the licensee no longer passes the test.

(II) After the initial financial test, the licensee must repeat passage of the test within 90 days after the close of each succeeding fiscal year.

(III) If the licensee no longer meets the requirements of (h)1., the licensee must send notice to the Department of its intent to establish alternative financial assurance as specified in Department regulations. The notice must be sent by certified mail, return receipt requested, within 90 days after the end of the fiscal year for which the year-end financial data show that the licensee no longer meets the financial test requirements. The licensee must provide alternate financial assurance within 120 days after the end of such fiscal year.

3. Self-Guarantee

The terms of a self-guarantee which an applicant or licensee furnishes must provide that:

(i) The guarantee shall remain in force unless the licensee sends notice of cancellation by certified mail, and/or return receipt requested, to the Department. Cancellation may not occur unless an alternative financial assurance mechanism is in place.

(ii) The licensee shall provide alternative financial assurance as specified in the Department's regulations within 90 days following receipt by the Department of a notice of cancellation of the guarantee.

(iii) The guarantee and financial test provisions must remain in effect until the Department has terminated the license or until another financial assurance method acceptable to the Department has been put in effect by the licensee.

(iv) The applicant or licensee must provide to the Department a written guarantee (a written commitment by a corporate officer or officer of the institution) which states that the licensee will fund and carry out the required decommissioning activities or, upon issuance of an order by the Department, the licensee will set up and fund a trust in the amount of the current cost estimates for decommissioning.

(v) If, at any time, the licensee's most recent bond issuance ceases to be rated in any category of "A" or above by either Standard and Poors or Moodys, the licensee shall provide notice in writing of such fact to the Department within 20 days after publication of the change by the rating service.

Authority: O.C.G.A. §§ 31-13-1, et seq. **History.** Original Rule entitled “Standards for Protection Against Radiation” adopted. F. May 2, 1991; eff. May 22, 1991. **Amended:** F. Feb. 24, 1994; eff. Mar. 16, 1994. **Amended:** F. Oct. 4, 1994; eff. Oct. 24, 1994. **Amended:** F. Apr. 16, 1997; eff. May 6, 1997. **Amended:** F. Mar. 29, 2002; eff. Apr. 18, 2002. **Amended:** F. May 30, 2003; eff. July 1, 2003, as specified by the Agency. **Amended:** F. Oct. 17, 2008; eff. Nov. 6, 2008. **Amended:** F. Jan. 8, 2014; eff. Jan. 28, 2014.

391-3-17-.03 Standards for Protection Against Radiation. Amended

(1) **General Provisions**

(a) Purpose.

This Rule, 391-3-17-.03, establishes standards for protection against ionizing radiation resulting from activities conducted pursuant to licenses issued by the Department. The requirements in this Rule are designed to control the receipt, possession, use, transfer, and disposal of sources of radiation by any licensee so that the total dose to an individual, including doses resulting from all sources of radiation other than background radiation, does not exceed the standards for protection against radiation prescribed in this Rule. However, nothing in this Rule shall be construed as limiting actions that may be necessary to protect health and safety.

(b) Scope.

This Rule applies to persons licensed by the Department on or after January 1, 1994, to receive, possess, use, transfer, or dispose of sources of radiation. The limits in this Rule do not apply to doses due to background radiation, to exposure of patients to radiation for the purpose of medical diagnosis or therapy, or to voluntary participation in medical research programs.

(2) **Definitions**

The definitions set forth for certain terms under 391-3-17-.01 are applicable to those terms as used in this Rule, unless the term is otherwise defined herein. As used in this Rule:

(a) "Air-purifying respirator" means a respirator with an air-purifying filter, cartridge, or canister that removes specific air contaminants by passing ambient air through the air-purifying element.

(b) "Assigned protection factor" (APF) means the expected workplace level of respiratory protection that would be provided by a properly functioning respirator or a class of respirators to properly fitted and trained users. Operationally, the inhaled concentration can be estimated by dividing the ambient airborne concentration by the APF.

(c) "Atmosphere-supplying respirator" means a respirator that supplies the respirator user with breathing air from a source independent of the ambient atmosphere, and includes supplied-air respirators (SARs) and self-contained breathing apparatus (SCBA) units.

(d) "Annual limit on intake" (ALI) means the derived limit for the amount of radioactive material taken into the body of an adult worker by inhalation or ingestion in a year. ALI is the smaller value of intake of a given radionuclide in a year by the reference man that would result in a committed effective dose equivalent of five rem (0.05 Sv) or a committed dose equivalent of 50 rem (0.5 Sv) to any individual organ or tissue. ALI values for intake by ingestion and by inhalation of selected radionuclides are given in Table I, Columns 1 and 2, of Appendix B to 10 CFR 20.

(e) "Chelating agent" means amine polycarboxylic acids, hydroxycarboxylic acids, gluconic acid, and polycarboxylic acids.

(f) "Chemical description" means a description of the principal chemical characteristics of a low-level radioactive waste.

(g) "Class" means a classification scheme for inhaled material according to its rate of clearance from the pulmonary region of the lung. Materials are classified as D, W, or Y, which apply to a range of clearance half-times: for Class D (Days), of less than ten days; for Class W (Weeks), from ten to 100 days; and for Class Y (Years), of greater than 100 days. For purposes of this Chapter, "lung class" and "inhalation class" are equivalent terms.

(h) "Computer-readable medium" means that the Department's computer can transfer the information from the medium into its memory.

(i) "Consignee" means the designated receiver of the shipment of low-level radioactive waste.

(j) "Constraint (dose constraint)" means a value above which specified licensee actions are required.

(k) "Critical Group" means the group of individuals reasonably expected to receive the greatest exposure to residual radioactivity for any applicable set of circumstances.

(l) "Declared pregnant woman" means any woman who has voluntarily informed the licensee, in writing, of her pregnancy and the estimated date of conception. The declaration remains in effect until the declared pregnant woman withdraws the declaration in writing or is no longer pregnant.

(m) "Decommission" means to remove a facility or site safely from service and reduce residual radioactivity to a level that permits release of the property for unrestricted use and termination of the license.

(n) "Decontamination facility" means a facility operating under a Department, U.S. Nuclear Regulatory Commission, Agreement State or Licensing State license whose principal purpose is decontamination of equipment or materials to accomplish recycle, reuse, or other waste management objectives, and, for purposes of this part, is not considered to be a consignee for LLW shipments.

(o) "Demand respirator" means an atmosphere-supplying respirator that admits breathing air to the facepiece only when a negative pressure is created inside the facepiece by inhalation.

(p) "Derived air concentration" (DAC) means the concentration of a given radionuclide in air which, if breathed by the reference man for a working year of 2,000 hours under conditions of light work (inhalation rate of 1.2 cubic meters of air per hour), results in an intake of one ALI. DAC values are given in Table I, Column 3 of Appendix B to 10 CFR 20.

(q) "Derived air concentration-hour" (DAC-hour) means the product of the concentration of radioactive material in air, expressed as a fraction or multiple of the derived air concentration for each radionuclide, and the time of exposure to that radionuclide, in hours. A licensee may take 2,000 DAC-hours to represent one ALI, equivalent to a committed effective dose equivalent of five rem (0.05 Sv).

(r) "Disposable respirator" means a respirator for which maintenance is not intended and that is designed to be discarded after excessive breathing resistance, sorbent exhaustion, physical damage, or end-of-service-life renders it unsuitable for use. Examples of this type of respirator

are a disposable half-mask respirator or a disposable escape-only self-contained breathing apparatus (SCBA).

(s) "Disposal container" means a container principally used to confine low-level radioactive waste during disposal operations at a land disposal facility (also see "high integrity container"). Note that for some shipments, the disposal container may be the transport package.

(t) "Distinguishable from background" means that the detectable concentration of a radionuclide is statistically different from the background concentration of that radionuclide in the vicinity of the site or, in the case of structures, in similar materials using adequate measurement technology, survey, and statistical techniques.

(u) "Dosimetry processor" means a person that processes and evaluates individual monitoring equipment devices in order to determine the radiation dose delivered to the monitoring devices.

(v) "EPA identification number" means the number received by a transporter following application to the Administrator of EPA as required by 40 CFR part 263.

(w) "Filtering facepiece" (dust mask) means a negative pressure particulate respirator with a filter as an integral part of the facepiece or with the entire facepiece composed of the filtering medium, not equipped with elastomeric sealing surfaces and adjustable straps.

(x) "Fit factor" means a quantitative estimate of the fit of a particular respirator to a specific individual, and typically estimates the ratio of the concentration of a substance in ambient air to its concentration inside the respirator when worn.

(y) "Fit test" means the use of a protocol to qualitatively or quantitatively evaluate the fit of a respirator on an individual.

(z) "Generator" means a licensee operating under a Department, U.S. Nuclear Regulatory Commission or Agreement State license who (1) is a waste generator or (2) is the licensee to whom waste can be attributed within the context of the Low-Level Radioactive Waste Policy Amendments Act of 1985 (e.g., waste generated as a result of decontamination or recycle activities).

(aa) "Helmet" means a rigid respiratory inlet covering that also provides head protection against impact and penetration.

(bb) "High integrity container (HIC)" means a container commonly designed to meet the structural stability requirements of Rule 391-3-17-.03(13)(g), and to meet Department of Transportation requirements for a Type A package.

(cc) "Hood" means a respiratory inlet covering that completely covers the head and neck and may also cover portions of the shoulders and torso.

(dd) "Land disposal facility" means the land, buildings and structures, and equipment that are intended to be used for the disposal of radioactive waste. For purposes of this Rule, a "geologic repository" as defined in 10 CFR Part 60 is not considered a "land disposal facility."

(ee) "Lens dose equivalent" (LDE) means the external exposure of the lens of the eye and is taken as the dose equivalent at a tissue depth of 0.3 centimeter (300 mg/cm^2).

(ff) "Loose-fitting facepiece" means a respiratory inlet covering that is designed to form a partial seal with the face.

(gg) "Nationally tracked source" means a sealed source containing a quantity equal to or greater than Category 1 or Category 2 levels of any radioactive material listed in Table 3 of 391-3-17-.03(15). In this context a sealed source is defined as radioactive material that is sealed in a capsule or closely bonded, in a solid form and which is not exempt from regulatory control. It does not mean material encapsulated solely for disposal, or nuclear material contained in any fuel assembly, subassembly, fuel rod, or fuel pellet. Category 1 nationally tracked sources are those containing radioactive material at a quantity equal to or greater than the Category 1 threshold. Category 2 nationally tracked sources are those containing radioactive material at a quantity equal to or greater than the Category 2 threshold but less than the Category 1 threshold.

(hh) "Negative pressure respirator" (tight fitting) means a respirator in which the air pressure inside the facepiece is negative during inhalation with respect to the ambient air pressure outside the respirator.

(ii) "Nonstochastic effect" means a health effect, the severity of which varies with the dose and for which a threshold is believed to exist. Radiation-induced cataract formation is an example of a nonstochastic effect. For purposes of this Chapter, "deterministic effect" is an equivalent term.

(jj) "Positive pressure respirator" means a respirator in which the pressure inside the respiratory inlet covering exceeds the ambient air pressure outside the respirator.

(kk) "Physical description" means the items called for on NRC Form 541 or equivalent form to describe a low-level radioactive waste.

(ll) "Planned special exposure" means an infrequent exposure to radiation separate from and in addition to the annual occupational dose limits.

(mm) "Powered air-purifying respirator" (PAPR) means an air-purifying respirator that uses a blower to force the ambient air through air-purifying elements to the inlet covering.

(nn) "Pressure demand respirator" means a positive pressure atmosphere-supplying respirator that admits breathing air to the facepiece when the positive pressure is reduced inside the facepiece by inhalation.

(oo) "Qualitative fit test" (QLFT) means a pass/fail fit test to assess the adequacy of respirator fit that relies on the individual's response to the test agent.

(pp) "Quantitative fit test" (QNFT) means an assessment of the adequacy of respirator fit by numerically measuring the amount of leakage into the respirator.

(qq) "Reference man" means a hypothetical aggregation of human physical and physiological characteristics determined by international consensus. These characteristics may be used by researchers and public health workers to standardize results of experiments and to relate biological insult to a common base.

(rr) "Residual radioactivity" means radioactivity in structures, materials, soils, groundwater, and other media at a site resulting from activities under the licensee's control. This includes radioactivity from all licensed and unlicensed sources used by the licensee, but excludes background radiation. It also includes radioactive materials remaining at the site as a result of routine or accidental releases of radioactive material at the site and previous burials at the site, even if those burials were made in accordance with the provisions of Rule .03 of this Chapter.

(ss) "Residual waste" means low-level radioactive waste resulting from processing or decontamination activities that cannot be easily separated into distinct batches attributable to specific waste generators. This waste is attributable to the processor or decontamination facility, as applicable.

(tt) "Respiratory protective device" means an apparatus, such as a respirator, used to reduce an individual's intake of airborne radioactive materials.

(uu) "Self-contained breathing apparatus" (SCBA) means an atmosphere-supplying respirator for which the breathing air source is designed to be carried by the user.

(vv) "Sanitary sewerage" means a system of public sewers for carrying off waste water and refuse, but excluding sewage treatment facilities, septic tanks, and leach fields owned or operated by the licensee.

(ww) "Shipper" means the licensed entity (i.e., the waste generator, waste collector, or waste processor) who offers low-level radioactive waste for transportation, typically consigning this type of waste to a licensed waste collector, waste processor, or land disposal facility operator.

(xx) "Shipping paper" means NRC Form 540 and, if required, NRC Form 540A or equivalent forms which include the information required by DOT in 49 CFR Part 172.

(yy) "Source material" means

1. Uranium or thorium, or any combination thereof, in any physical or chemical form; or

2. Ores that contain by weight one-twentieth of one percent (0.05 percent) or more of uranium, thorium, or any combination thereof. Source material does not include special nuclear material.

(zz) "Stochastic effect" means a health effect that occurs randomly and for which the probability of the effect occurring, rather than its severity, is assumed to be a linear function of dose without threshold. Hereditary effects and cancer incidence are examples of stochastic effects. For purposes of this Chapter, "probabilistic effect" is an equivalent term.

(aaa) "Supplied-air respirator" (SAR) or airline respirator means an atmosphere-supplying respirator for which the source of breathing air is not designed to be carried by the user.

(bbb) "Tight-fitting facepiece" means a respiratory inlet covering that forms a complete seal with the face.

(ccc) "Uniform Low-Level Radioactive Waste Manifest" or "Uniform Manifest" means the combination of NRC Forms 540, 541, and if necessary, 542, and their respective continuation sheets as needed, or equivalent forms.

(ddd) "User seal check" (fit check) means an action conducted by the respirator user to determine if the respirator is properly seated to the face. Examples include negative pressure check, positive pressure check, irritant smoke check, or isoamyl acetate check.

(eee) "Very high radiation area" means an area, accessible to individuals, in which radiation levels from radioactive materials external to the body could result in an individual receiving an absorbed dose in excess of 500 rads (5 Gray) in one hour at one meter from a source of radiation or from any surface that the radiation penetrates.[1]

(fff) "Waste collector" means an entity, operating under a Department, U.S. Nuclear Regulatory Commission, Agreement State, or Licensing State license, whose principal purpose is to collect and consolidate waste generated by others, and to transfer this waste, without processing or repackaging the collected waste, to another licensed waste collector, licensed waste processor, or licensed land disposal facility.

(ggg) "Waste description" means the physical, chemical and radiological description of a low-level radioactive waste as called for on NRC Form 541 or equivalent form.

(hhh) "Waste generator" means an entity, operating under a Department, U.S. Nuclear Regulatory Commission, Agreement State, or Licensing State license, who (1) possesses any material or component that contains radioactivity or is radioactively contaminated for which the licensee foresees no further use, and (2) transfers this material or component to a licensed land disposal facility or to a licensed waste collector or processor for handling or treatment prior to disposal. A licensee performing processing or decontamination services may be a "waste generator" if the transfer of low-level radioactive waste from its facility is defined as "residual waste."

(iii) "Waste processor" means an entity, operating under a Department, U.S. Nuclear Regulatory Commission, Agreement State, or Licensing State license, whose principal purpose is to process, repackage, or otherwise treat low-level radioactive material or waste generated by others prior to eventual transfer of waste to a licensed low-level radioactive waste land disposal facility.

(jjj) "Waste type" means a waste within a disposal container having a unique physical description (i.e., a specific waste descriptor code or description; or a waste sorbed on or solidified in a specifically defined media).

(kkk) "Weighting factor" (w_T) for an organ or tissue (T) means the proportion of the risk of stochastic effects resulting from irradiation of that organ or tissue to the total risk of stochastic effects when the whole body is irradiated uniformly. For calculating the effective dose equivalent, the values of w_T are:

[1] For very high doses received at high dose rates, units of absorbed dose, Gray and rad, are appropriate, rather than units of dose equivalent, Sievert and rem.

ORGAN DOSE WEIGHTING FACTORS

Organ or Tissue	w_T
Gonads	0.25
Breast	0.15
Red bone marrow	0.12
Lung	0.12
Thyroid	0.03
Bone surfaces	0.03
Remainder	0.30[a]
Whole Body	1.00[b]

[a] 0.30 results from 0.06 for each of five "remainder" organs, excluding the skin and the lens of the eye, that receive the highest doses.

[b] For the purpose of weighting the external whole body dose, for adding it to the internal dose, a single weighting factor, $w_T = 1.0$, has been specified. The use of other weighting factors for external exposure will be approved on a case-by-case basis until such time as specific guidance is issued.

(3) **Implementation**

(a) Any existing license condition that is more restrictive than this Rule remains in force until there is an amendment or renewal of the license.

(b) If a license condition exempts a licensee from a provision of Rule 391-3-17-.03 in effect on or before January 1, 1994, it also exempts the licensee from the corresponding provision of this Rule.

(c) If a license condition cites provisions of Rule 391-3-17-.03 in effect prior to January 1, 1994, which do not correspond to any provisions of this Rule, the license condition remains in force until there is an amendment or renewal of the license that modifies or removes this condition.

(4) **Radiation Protection Programs**

(a) Each licensee shall develop, document, and implement a Radiation Protection Program sufficient to ensure compliance with the provisions of this Rule. See (14)(b) of this Rule for record-keeping requirements relating to these Programs.

(b) The licensee shall use, to the extent practical, procedures and engineering controls based upon sound radiation protection principles to achieve occupational doses and doses to members of the public that are as low as is reasonably achievable (ALARA).

(c) The licensee shall, at least annually, review the Radiation Protection Program content and implementation.

(d) To implement the ALARA requirements of .03(4)(b), and notwithstanding the requirements in .03(5)(i) of this rule, a constraint on air emissions of radioactive material to the environment, excluding Radon-222 and its daughters, shall be established by licensees such that the individual member of the public likely to receive the highest dose will not be expected to receive a total effective dose equivalent in excess of ten (10) mrem (0.1 mSv) per year from these

emissions. If a licensee subject to this requirement exceeds this dose constraint, the licensee shall report the exceedance as provided in .03(15)(c) and promptly take appropriate corrective action to ensure against recurrence.

(5) **Occupational Dose Limits and Dose Limits for Individual Members of the Public**

(a) Occupational Dose Limits for Adults.

1. The licensee shall control the occupational dose to individual adults, except for planned special exposures pursuant to (5)(f) of this Rule, in accordance with the following dose limits:

(i) An annual limit, which is the more limiting of:

(I) The total effective dose equivalent being equal to five (5) rem (0.05 Sv); or

(II) The sum of the deep dose equivalent and the committed dose equivalent to any individual organ or tissue other than the lens of the eye being equal to 50 rem (0.50 Sv).

(ii) The annual limits to the lens of the eye, to the skin of the whole body, and to the skin of the extremities, which are:

(I) A lens dose equivalent of 15 rem (0.15 Sv); and

(II) A shallow dose equivalent of 50 rem (0.50 Sv) to the skin of the whole body or to the skin of any extremity.

2. Doses received in excess of the annual limits, including doses received during accidents, emergencies, and planned special exposures, shall be subtracted from the limits for planned special exposures that the individual may receive during the current year and during the individual's lifetime, listed in (5)(f)5.(i) and (ii) of this Rule.

3. When the external exposure is determined by measurement with an external personal monitoring device, the deep-dose equivalent must be used in place of the effective dose equivalent, unless the effective dose equivalent is determined by a dosimetry method approved by the NRC. The assigned deep dose equivalent shall be for the portion of the body receiving the highest exposure. The assigned shallow dose equivalent shall be the dose averaged over the contiguous ten (10) square centimeters of skin receiving the highest exposure.

4. The deep dose equivalent, lens dose equivalent, and shallow dose equivalent may be assessed from surveys or other radiation measurements for the purpose of demonstrating compliance with the occupational dose limits, if the individual monitoring device was not in the region of highest potential exposure or the results of individual monitoring are unavailable.

5. Derived air concentration (DAC) and annual limit on intake (ALI) values are specified in Table I of Appendix B to 10 CFR 20 and may be used to determine the individual's dose and to demonstrate compliance with the occupational dose limits. See (14)(g) of this Rule for maintaining records of these exposures.

6. Notwithstanding the annual dose limits, the licensee shall limit the soluble uranium intake by an individual to ten milligrams in a week in consideration of chemical toxicity. See footnote 3 of Appendix B 10 CFR 20.

7. The licensee shall reduce the dose that an individual may be allowed to receive in the current year by the amount of occupational dose received while employed by any other person during the current year. See (5)(e) of this Rule.

(b) Compliance with Requirements for Summation of External and Internal Doses.

1. General Requirements. If the licensee is required to monitor pursuant to both (8)(b)1. and 2. of this Rule, the licensee shall demonstrate compliance with the dose limits by summing external and internal doses. If the licensee is required to monitor only pursuant to (8)(b)1. of this Rule or only pursuant to (8)(b)2. of this Rule, then summation is not required to demonstrate compliance with the dose limits. The licensee must demonstrate compliance with the requirements for summation of external and internal doses pursuant to (5)(b)2., 3., and 4. of this Rule. The dose equivalents for the lens of the eye, the skin, and the extremities are not included in the summation, but are subject to separate limits.

2. Intake by Inhalation. If the only intake of radionuclides is by inhalation, the total effective dose equivalent limit is not exceeded if the sum of the deep dose equivalent divided by the total effective dose equivalent limit and one of the following does not exceed unity:

(i) The sum of the fractions of the inhalation ALI for each radionuclide;

(ii) The total number of derived air concentration-hours (DAC-hours) for all radionuclides divided by 2,000; or

(iii) The sum of the calculated committed effective dose equivalents to all significantly irradiated organs or tissues (T) calculated from bioassay data using appropriate biological models and expressed as a fraction of the annual limit. For purposes of this requirement, an organ or tissue is deemed to be significantly irradiated if, for that organ or tissue, the product of the weighting factors, w_T, and the committed dose equivalent, $H_{T,50}$, per unit intake is greater than ten percent of the maximum weighted value of H_{50} (i.e., $w_T H_{T,50}$), per unit intake for any organ or tissue.

3. Intake by Oral Ingestion. If the occupationally-exposed individual receives an intake of radionuclides by oral ingestion greater than ten percent of the applicable oral ALI, the licensee shall account for this intake and include it in demonstrating compliance with the limits.

4. Intake through Wounds or Absorption through Skin. The licensee shall evaluate and, to the extent practical, account for intakes through wounds or skin absorption. The intake through intact skin has been included in the calculation of DAC for hydrogen-3 and does not need to be evaluated or accounted for pursuant to (5)(b)4. of this Rule.

(c) Determination of External Dose from Airborne Radioactive Material.

1. Licensees shall, when determining the dose from airborne radioactive material, include the contribution to the deep dose equivalent, lens dose equivalent, and shallow dose equivalent from external exposure to the radioactive cloud. See Appendix B, footnotes 1 and 2, of 10 CFR 20.

2. Airborne radioactivity measurements and DAC values shall not be used as the primary means to assess the deep dose equivalent when the airborne radioactive material includes radionuclides other than noble gases or if the cloud of airborne radioactive material is not

relatively uniform. The determination of the deep dose equivalent to an individual shall be based upon measurements using instruments or individual monitoring devices.

(d) Determination of Internal Exposure.

1. For purposes of assessing the dose used to determine compliance with occupational dose equivalent limits, the licensee shall, when required under (8)(b) of this Rule, take suitable and timely measurements of:

(i) Concentrations of radioactive materials in air in work areas during operations;

(ii) Quantities of radionuclides in the body;

(iii) Quantities of radionuclides excreted from the body; or

(iv) Combinations of these measurements.

2. Unless respiratory protective equipment is used, as provided in (10)(d) of this Rule, or the assessment of intake is based on bioassays, the licensee shall assume that an individual inhales radioactive material at the airborne concentration in which the individual is present.

3. When specific information on the physical and biochemical properties of the radionuclides taken into the body or the behavior of the material in an individual is known, the licensee may:

(i) Use that information to calculate the committed effective dose equivalent, and, if used, the licensee shall document that information in the individual's record;

(ii) Upon prior approval of the Department, adjust the DAC or ALI values to reflect the actual physical and chemical characteristics of airborne radioactive material, for example, aerosol size distribution or density; and

(iii) Separately assess the contribution of fractional intakes of Class D, W, or Y compounds of a given radionuclide to the committed effective dose equivalent. See Appendix B of 10 CFR 20.

4. If the licensee chooses to assess intakes of Class Y material using the measurements given in (5)(d)1.(ii) or (iii) of this Rule, the licensee may delay the recording and reporting of the assessments for periods up to seven months, unless otherwise required by (15)(b) or (15)(c) of this Rule. This delay permits the licensee to make additional measurements basic to the assessments.

5. If the identity and concentration of each radionuclide in a mixture are known, the fraction of the DAC applicable to the mixture for use in calculating DAC-hours shall be either:

(i) The sum of the ratios of the concentration to the appropriate DAC value (i.e. D, W, or Y) from Appendix B of 10 CFR 20, for each radionuclide in the mixture; or

(ii) The ratio of the total concentration for all radionuclides in the mixture to the most restrictive DAC value for any radionuclide in the mixture.

6. If the identity of each radionuclide in a mixture is known, but the concentration of one or more of the radionuclides in the mixture is not known, the DAC for the mixture shall be the most restrictive DAC of any radionuclide in the mixture.

7. When a mixture of radionuclides in the air exists, a licensee may disregard certain radionuclides in the mixture if:

(i) The licensee uses the total activity of the mixture in demonstrating compliance with the dose limits in (5)(a) of this Rule and in complying with the monitoring requirements in (8)(b)2. of this Rule;

(ii) The concentration of any radionuclide disregarded is less than ten percent of its DAC; and

(iii) The sum of these percentages for all of the radionuclides disregarded in the mixture does not exceed 30 percent.

8. When determining the committed effective dose equivalent, the following information may be considered:

(i) In order to calculate the committed effective dose equivalent, the licensee may assume that the inhalation of one ALI, or an exposure of 2,000 DAC-hours, results in a committed effective dose equivalent of five rem (0.05Sv) for radionuclides that have their ALIs or DACs based on the committed effective dose equivalent;

(ii) When the ALI (and the associated DAC) is determined by the non-stochastic organ dose limit of 50 rem (0.50 Sv), the intake of radionuclides that would result in a committed effective dose equivalent of five rem (0.05 Sv), (i.e., the stochastic ALI) is listed in parentheses in Table I of Appendix B of 10 CFR 20. In this case, the licensee may, as a simplifying assumption, use the stochastic ALIs to determine the committed effective dose equivalent. However, if the licensee uses the stochastic ALIs, the licensee shall also demonstrate that the limit in (5)(a)1.(i)(II) of this Rule is not exceeded.

(e) Determination of Prior Occupational Dose.

1. For each individual who is likely to receive, in a year, an occupational dose requiring monitoring pursuant to (8)(b) of this Rule, the licensee shall:

(i) Determine the occupational radiation dose received during the current year; and

(ii) Attempt to obtain the records of lifetime cumulative occupational radiation dose.

2. Prior to permitting an individual to participate in a planned special exposure, the licensee shall determine:

(i) The internal and external doses from all previous planned special exposures; and

(ii) All doses in excess of the limits, including doses received during accidents and emergencies, received during the lifetime of the individual.

3. In complying with the requirements of (5)(e)1. of this Rule, a licensee may:

(i) Accept, as a record of the occupational dose that the individual received during the current year, a written signed statement from the individual, or from the individual's most recent employer for work involving radiation exposure, that discloses the nature and the amount of any occupational dose that the individual may have received during the current year;

(ii) Accept, as the record of lifetime cumulative radiation dose, an up-to-date Department Form "Occupational Radiation Exposure History" or equivalent, signed by the individual and countersigned by an appropriate official of the most recent employer for work involving radiation exposure, or the individual's current employer if the individual is not employed by the licensee; and

(iii) Obtain the individual's dose equivalent from the most recent employer for work involving radiation exposure, or the individual's current employer if the individual is not employed by the licensee, by telephone, telegram, electronic media, facsimile, or letter. The licensee shall request a written verification of the dose data if the authenticity of the transmitted report cannot be established.

4. The licensee shall record the exposure history, as required by (5)(e)1. of this Rule, on Department Form "Occupational Radiation Exposure History" or other clear and legible record, and all of the information required on that form. The form or record shall show each period in which the individual received occupational exposure to radiation or radioactive material and shall be signed by the individual who received the exposure. For each period for which the licensee obtains, the licensee shall use the dose shown in the report in preparing the Department Form "Occupational Radiation Exposure History" or equivalent form. For any period in which the licensee does not obtain a report, the licensee shall place a notation on the "Occupational Radiation Exposure History" or equivalent form indicating the periods of time for which data are not available.

5. Licensees are not required to partition historical dose between external dose equivalents and internal committed dose equivalents of radionuclides assessed under the Regulations in effect before January 1, 1994. Further, occupational exposure histories obtained and recorded on Department Form "Occupational Radiation Exposure History" or equivalent before January 1, 1994, might not have included effective dose equivalent but may be used in the absence of specific information on the intake of radionuclides by the individual.

6. If the licensee is unable to obtain a complete record of an individual's current and previously accumulated occupational dose, the licensee shall assume:

(i) In establishing administrative controls under (5)(a)7. of this Rule, for the current year, that the allowable dose limit for the individual is reduced by 1.25 rem (12.5 mSv) for each quarter for which records were unavailable and the individual was engaged in activities that could have resulted in occupational radiation exposure; and

(ii) That the individual is not available for planned special exposures.

7. The licensee shall retain the records on Department Form "Occupational Radiation Exposure History" or equivalent until the Department terminates each pertinent license requiring this record. The licensee shall retain records used in preparing Department Form "Occupational Radiation Exposure History" or equivalent for three years after the record is made.

(f) Planned Special Exposures. A licensee may authorize an adult worker to receive doses in addition to and accounted for separately from the doses received under the limits specified in (5)(a) of this Rule provided that each of the following conditions is satisfied:

1. The licensee authorizes a planned special exposure only in an exceptional situation when alternatives that might avoid the higher exposure estimated to result from the planned special exposure are unavailable or impractical (i.e., industrial radiography source retrieval for an area that cannot be evacuated).

2. The management official of the licensee (and employer if the employer is not the licensee) specifically authorizes the planned special exposure, in writing, before the exposure occurs.

3. Before a planned special exposure, the licensee ensures that each individual involved is:

(i) Informed of the purpose of the planned operation;

(ii) Informed of the estimated doses and associated potential risks and specific radiation levels or other conditions that might be involved in performing the task; and

(iii) Instructed in the measures to be taken to keep the dose ALARA considering other risks that may be present.

4. Prior to permitting an individual to participate in a planned special exposure, the licensee ascertains prior doses as required by (5)(e)2. of this Rule during the lifetime for each individual involved.

5. Subject to (5)(a)2. of this Rule, the licensee shall not authorize a planned special exposure that would cause an individual to receive a dose from all planned special exposures and all doses in excess of the limits to exceed:

(i) The numerical values of any of the dose limits in (5)(a)1. of this Rule in any year; and

(ii) Five times the annual dose limits in (5)(a)1. of this Rule during the individual's lifetime.

6. The licensee maintains records of the conduct of a planned special exposure in accordance with (14)(f) of this Rule and submits a written report in accordance with (15)(d) of this Rule.

7. The licensee records the best estimate of the dose resulting from the planned special exposure in the individual's record and informs the individual, in writing, of the dose within 30 days after the date of the planned special exposure. The dose from planned special exposures shall not be considered in controlling the future occupational dose of the individual pursuant to (5)(a)1. of this Rule but shall be included in evaluations required by (5)(f)1. and (5)(f)5. of this Rule.

(g) Occupational Dose Limits for Minors. The annual occupational dose limits for minors are ten percent of the annual occupational dose limits specified for adult workers in (5)(a) of this Rule.

(h) Dose to an Embryo/Fetus.

1. The licensee shall ensure that the dose equivalent to an embryo/fetus during the entire pregnancy, due to occupational exposure of a declared pregnant woman, does not exceed 0.5 rem (5 mSv). For record-keeping requirements, see (14)(g) of this Rule.

2. The licensee shall make efforts to avoid substantial variation[2] above a uniform monthly exposure rate to a declared pregnant woman so as to satisfy the limit in (5)(h)1. of this Rule.

3. The dose equivalent to an embryo/fetus shall be taken as the sum of:

(i) The deep-dose equivalent to the declared pregnant woman; and

(ii) The dose equivalent to the embryo/fetus from radionuclides in the embryo/fetus and radionuclides in the declared pregnant woman.

4. If by the time the woman declares pregnancy to the licensee the dose equivalent to the embryo/fetus is found to have exceeded 0.50 rem (5.0 mSv), or is within 0.05 rem (0.5 mSv) of this dose equivalent, the licensee shall be deemed to be in compliance with (5)(h)1. of this Rule if the additional dose equivalent to the embryo/fetus does not exceed 0.05 rem (0.5 mSv) during the remainder of the pregnancy.

(i) Radiation Dose Limits for Individual Members of the Public.

1. Each licensee shall conduct operations so that:

(i) Except as provided in (5)(i)1.(iii) the total effective dose equivalent to individual members of the public from the licensed operation does not exceed 0.1 rem (1 mSv) in a year, exclusive of the dose contributions from background radiation, from any medical administration the individual has received, from exposure to individuals administered radioactive material and released in accordance with Rule .05(37), from voluntary participation in medical research programs, and from the licensee's disposal of radioactive material into sanitary sewerage in accordance with (13)(c) of this Rule; and

(ii) The dose in any unrestricted area from external sources, exclusive of the dose contributions from individuals administered radioactive material and released in accordance with Rule .05(37), does not exceed 0.002 rem (0.02 mSv) in any one hour.

(iii) The total effective dose equivalent to individual members of the public from infrequent exposure to radiation from radiation machines does not exceed 0.5 rem (5 mSv).

2. A licensee or license applicant may apply for prior Department authorization to operate up to an annual dose limit for an individual member of the public of 0.5 rem (5 mSv). The licensee or license applicant shall include the following information in this application:

(i) Demonstration of the need for and the expected duration of operations in excess of the limit in (5)(i)1. of this Rule;

---

[2] The National Council on Radiation Protection and Measurements recommended in NCRP Report No. 91 (June 1, 1987) that no more than 0.05 rem (0.5 mSv) to the embryo/fetus be received in any one month.

(ii) The licensee's program to assess and control dose within the 0.5 rem (5 mSv) annual limit; and

(iii) The procedure to be followed to maintain the dose as low as is reasonably achievable (ALARA).

3. In addition to the requirements of this Rule, a licensee subject to the provisions of the U.S. Environmental Protection Agency's (EPA) generally applicable environmental radiation standards in 40 CFR Part 190 shall comply with those standards.

4. The Department may impose additional restrictions on radiation levels in unrestricted areas and on the total quantity of radionuclides that a licensee may release in effluents in order to restrict the collective dose.

(j) Compliance with Dose Limits for Individual Members of the Public.

1. The licensee shall make or cause to be made, as appropriate, surveys of radiation levels in unrestricted areas and radioactive materials in effluents released to unrestricted areas to demonstrate compliance with the dose limits for individual members of the public in (5)(i) of this Rule.

2. A licensee shall show compliance with the annual dose limit in (5)(i) of this Rule by:

(i) Demonstrating by measurement or calculation that the total effective dose equivalent to the individual likely to receive the highest dose from the licensed operation does not exceed the annual dose limit; or

(ii) Demonstrating that:

(I) The annual average concentrations of radioactive material released in gaseous and liquid effluents at the boundary of the unrestricted area do not exceed the values specified in Table II of Appendix B of 10 CFR 20.

(II) If an individual were continually present in an unrestricted area, the dose from external sources would not exceed 0.002 rem (0.02 mSv) in one hour and 0.05 rem (0.50 mSv) in one year.

3. Upon approval from the Department, the licensee may adjust the effluent concentration values in Appendix B, Table II of 10 CFR 20, for members of the public, to take into account the actual physical and chemical characteristics of the effluents (e.g., aerosol size distribution, solubility, density, radioactive decay equilibrium, and chemical form).

(6) **Testing for Leakage or Contamination of Sealed Sources**

(a) The licensee in possession of any sealed source shall assure that:

1. Each sealed source, other than hydrogen-3, with a half-life greater than 30 days and in any form other than gas, shall be tested for leakage or contamination as follows:

(i) Prior to initial use;

(ii) Unless otherwise authorized by the Department, at intervals not to exceed six months, except that each source designed for the purpose of emitting alpha particles shall be tested at intervals not to exceed three months;

(iii) At any other time there is reason to suspect that a sealed source might have been damaged or might be leaking, it shall be tested for leakage before further use; and

(iv) In the absence of a certificate from a transferor indicating that a test for leakage has been made within six months prior to the transfer, the sealed source shall not be put into use until tested and the results received.

2. Tests for leakage for all sealed sources, except those manufactured to contain radium, shall be capable of detecting the presence of 0.005 µCi (185 Bq) of radioactive material on a test sample. Test samples shall be taken from the sealed source or from the surfaces of the container in which the sealed source is stored or mounted on which one might expect contamination to accumulate. For sealed sources contained in a device, test samples are obtained when the source is in the "off" position.

3. Tests for leakage for sources manufactured to contain radium shall be capable of detecting an absolute leakage rate of 0.001 µCi (37 Bq) of radon-222 in a 24-hour period when the collection efficiency for radon-222 and its daughters has been determined with respect to collection method, volume, and time.

4. Test samples shall also be taken from the interior surfaces of the container in which sealed sources of radium are stored. This test shall be capable of detecting the presence of 0.005 µCi (185 Bq) of a radium daughter that has a half-life greater than four days.

5. Notwithstanding the periodic test for leakage required, any sealed source is exempt from such tests for leakage when the sealed source contains 100 µCi (3.7 MBq) or less of beta- or gamma-emitting material or ten µCi (370 kBq) or less of alpha-emitting material.

(b) Tests for leakage or contamination shall be performed by persons specifically authorized by the Department, an Agreement State, a Licensing State, or the U.S. Nuclear Regulatory Commission to perform such services.

(c) The following shall be considered evidence that the sealed source is leaking:

1. The presence of 0.005 µCi (185 Bq) or more of removable contamination on any test sample. If the test of a sealed source, other than radium, reveals the presence of 0.005 µCi (185 Bq) or more of removable contamination, the licensee shall immediately withdraw the sealed source from use, take action to prevent the spread of contamination, and cause the sealed source to be decontaminated and repaired or to be disposed of in accordance with this Rule.

2. Leakage of 0.001 µCi (37 Bq) of radon-222 per 24 hours for sealed sources manufactured to contain radium. If the test of a sealed source manufactured to contain radium reveals the presence of removable contamination resulting from the decay of 0.005 µCi (185 Bq) or more of radium-226, the licensee shall immediately withdraw the sealed source from use, take action to prevent the spread of contamination, and cause the sealed source to be decontaminated and repaired or to be disposed of in accordance with this Rule.

(d) Records of test results for sealed sources shall be made pursuant to (14)(d).

(e) Reports of test results for leaking or contaminated sealed sources shall be made pursuant to (15)(g) of this Rule.

(7) **Radiological Requirements for License Termination**

(a) General provisions and scope.

1. The requirements in this section apply to the decommissioning of facilities licensed under Rule .02(8)(g), (Licensing of Radioactive Materials. Amended);

2. The requirements in this section do not apply to sites which:

(i) Have been decommissioned prior to April 18, 2002 in accordance with requirements identified in .03(7) and Rule .02 of this Chapter; or

(ii) Have previously submitted and received Department approval on a decommissioning plan by April 18, 2002.

3. After a site has been decommissioned and the license terminated in accordance with the requirements in this section, the Department will require additional cleanup only if, based on new information, it determines that the requirements of this section were not met and residual radioactivity remaining at the site could result in significant threat to public health and safety.

4. When calculating TEDE to the average member of the critical group the licensee shall determine the peak annual TEDE dose expected within the first 1,000 years after decommissioning.

(b) Radiological requirements for unrestricted use. A site will be considered acceptable for unrestricted use if the residual radioactivity that is distinguishable from background radiation results in a TEDE to an average member of the critical group that does not exceed 25 mrem (0.25 mSv) per year, including that from groundwater sources of drinking water, and the residual radioactivity has been reduced to levels that are as low as reasonably achievable (ALARA). Determination of the levels which are ALARA must take into account consideration of any detriments, such as deaths from transportation accidents, expected to potentially result from decontamination and waste disposal.

(c) Alternate requirements for license termination.

1. The Department may terminate a license using alternate requirements greater than the dose requirements of .03(7)(b) if the licensee:

(i) Provides assurance that public health and safety would continue to be protected, and that it is unlikely that the dose from all man-made sources combined, other than medical, would be more than the 100 mrem/year (1 mSv/year) limit of .03(5)(i), by submitting an analysis of possible sources of exposure;

(ii) Reduces doses to ALARA levels, taking into consideration any detriments such as traffic accidents expected to potentially result from decontamination and waste disposal; and

(iii) Has submitted a decommissioning plan to the Department indicating the licensee's intent to decommission in accordance with requirements of Rule .02(18)(d), and specifying that the licensee proposes to decommission by use of alternate requirements. The licensee shall document in the decommissioning plan how the advice of individuals and institutions in the community who may be affected by the decommissioning has been sought and addressed, as appropriate, following analysis of that advice. In seeking such advice, the licensee shall provide for:

(I) Participation by representatives of a broad cross section of community interests who may be affected by the decommissioning;

(II) An opportunity for a comprehensive, collective discussion on the issues by the participants represented; and

(III) A publicly available summary of the results of all such discussions, including a description of the individual viewpoints of the participants on the issues and the extent of agreement and disagreement among the participants on the issues.

2. The use of alternate requirements to terminate a license requires the approval of the Department after consideration of the Department’s recommendations that will address any comments provided by the U.S. Environmental Protection Agency (EPA) and any public comments submitted in accordance with (7)(d) of this rule.

(d) Public notification and public participation. Upon the receipt of a decommissioning plan from the licensee, or a proposal by the licensee for release of a site in accordance with (7)(c) of this Rule, or whenever the Department deems such notice to be in the public interest, the Department will:

1. Notify and solicit comments from:

(i) Local and State governments in the vicinity of the site and any Indian Nation or other indigenous people that have treaty or statutory rights that could be affected by the decommissioning; and

(ii) The EPA for cases where the licensee proposes to release a site in accordance with (7)(c).

2. Publish a notice in the local newspaper(s), letters to State or local organizations, or other appropriate forum, that is readily accessible to individuals in the vicinity of the site, and solicit comments from affected parties.

(e) Minimization of contamination. Applicants for licenses, other than renewals, after April 18, 2002, shall describe in the application how facility design and procedures for operation will minimize, to the extent practical, contamination of the facility and the environment, facilitate eventual decommissioning, and minimize, to the extent practical, the generation of radioactive waste.

(8) **Surveys and Monitoring**

(a) General.

1. Each licensee shall make, or cause to be made, surveys that:

(i) May be necessary for the licensee to demonstrate compliance with this Rule; and

(ii) Are reasonable under the circumstances to evaluate:

(I) The magnitude and extent of radiation levels;

(II) Concentrations or quantities of radioactive material; and

(III) The potential radiological hazards.

2. The licensee shall ensure that instruments and equipment used for quantitative radiation measurements (e.g., dose rate and effluent monitoring) are calibrated periodically, at least annually, for the radiation measured except when a more frequent interval is specified in other applicable parts of these Rules or a license condition.

3. All personnel dosimeters, except for direct and indirect reading pocket ionization chambers and those dosimeters used to measure the dose to any extremity, that require processing to determine the radiation dose and that are used by licensees to comply with (5)(a) of this Rule, with other applicable provisions of this Chapter, or with conditions specified in a license shall be processed and evaluated by a qualified dosimetry processor. A dosimetry processor is qualified if it:

(i) Holds current personnel dosimetry accreditation from the National Voluntary Laboratory Accreditation Program (NVLAP) of the National Institute of Standards and Technology; and

(ii) Is approved in this accreditation process for the type of radiation or radiations included in the NVLAP program that most closely approximates the type of radiation or radiations for which the individual wearing the dosimeter is monitored.

4. The licensee shall ensure that adequate precautions are taken to prevent a deceptive exposure of an individual monitoring device.

(b) Conditions Requiring Individual Monitoring of External and Internal Occupational Dose. Each licensee shall monitor exposures to sources of radiation and radioactive material at levels sufficient to demonstrate compliance with the occupational dose limits of this Rule. As a minimum:

1. Each licensee shall monitor occupational exposure to radiation and shall supply and require the use of individual monitoring devices by:

(i) Adults likely to receive, in one year from sources external to the body, a dose in excess of ten percent of the limits in (5)(a)1. of this Rule;

(ii) Minors likely to receive, in one year from radiation sources external to the body, a deep dose equivalent in excess of 0.1 rem (1mSv), a lens dose equivalent in excess of 0.15 rem (1.5 mSv), or a shallow dose equivalent to the skin or to extremities in excess of 0.5 rem (5mSv);

(iii) Declared pregnant women likely to receive during the entire pregnancy, from radiation sources external to the body, a deep dose equivalent in excess of 0.1 rem (1 mSv);[3] and

(iv) Individuals entering a high or very high radiation area.

2. Each licensee shall monitor, to determine compliance with (5)(d) of this Rule, the occupational intake of radioactive material by, and assess the committed effective dose equivalent to:

(i) Adults likely to receive, in one year, an intake in excess of ten percent (10%) of the applicable ALI in Table I, Columns 1 and 2, of Appendix B of 10 CFR 20; and

(ii) Minors likely to receive, in one year, a committed effective dose equivalent in excess of 0.05 rem (0.50 mSv).

(iii) Declared pregnant women likely to receive, during the entire pregnancy, a committed effective dose equivalent in excess of 0.1 rem (1 mSv).

(9) **Control Of Exposure From External Sources In Restricted Areas**

(a) Control of Access to High Radiation Areas.

1. The licensee shall ensure that each entrance or access point to a high radiation area has one or more of the following features:

(i) A control device that, upon entry into the area, causes the level of radiation to be reduced below that level at which an individual might receive a deep dose equivalent of 0.1 rem (1 mSv) in one hour at 30 centimeters from the source of radiation or from any surface that the radiation penetrates;

(ii) A control device that energizes a conspicuous visible or audible alarm signal so that the individual entering the high radiation area and the supervisor of the activity are made aware of the entry; or

(iii) Entryways that are locked, except during periods when access to the areas is required, with positive control over each individual entry.

2. In place of the controls required by (9)(a)1. of this Rule, the licensee may substitute continuous direct or electronic surveillance that is capable of preventing unauthorized entry.

3. The licensee may apply to the Department for approval of alternative methods for controlling access to high radiation areas.

4. The licensee shall establish the controls required by (9)(a)1. and (9)(a)3. of this Rule in a way that does not prevent individuals from leaving a high radiation area.

[3]All of the occupational doses in .03(5)(a) continue to be applicable to the declared pregnant worker as long as the embryo/fetus dose limit is not exceeded.

5. The licensee is not required to control each entrance or access point to a room or other area that is a high radiation area solely because of the presence of radioactive materials prepared for transport and packaged and labeled in accordance with the regulations of the U.S. Department of Transportation provided that:

(i) The packages do not remain in the area longer than three days; and

(ii) The dose rate at one meter from the external surface of any package does not exceed 0.01 rem (0.1 mSv) per hour.

6. The licensee is not required to control entrance or access to rooms or other areas in hospitals solely because of the presence of patients containing radioactive material, provided that there are personnel in attendance who will take the necessary precautions to prevent the exposure of individuals to radiation or radioactive material in excess of the established limits in this Rule and to ensure operation within the ALARA provisions of the licensee's Radiation Protection Program.

7. The licensee is not required to control entrance or access to rooms or other areas containing sources of radiation capable of producing a high radiation area if the licensee has met all the specific requirements for access and control specified in other applicable Rules, such as 391-3-17-.04 for industrial radiography.

(b) Control of Access to Very High Radiation Areas.

1. In addition to the requirements in (9)(a) of this Rule, the licensee shall institute additional measures to ensure that an individual is not able to gain unauthorized or inadvertent access to areas in which radiation levels could be encountered at 500 rads (5 Gy) or more in one hour at one meter from a source of radiation or any surface through which the radiation penetrates. This requirement does not apply to rooms or areas in which diagnostic x-ray systems are the only source of radiation, or to non-self-shielded irradiators.

2. The licensee is not required to control entrance or access to rooms or other areas containing sources of radiation capable of producing a very high radiation area as defined in this Rule if the licensee has met all the specific requirements for access and control specified in other applicable Rules, such as 391-3-17-.04 for industrial radiography.

(10) **Respiratory Protection and Controls to Restrict Internal Exposure in Restricted Areas**

(a) Use of Process or Other Engineering Controls. The licensee shall use, to the extent practicable, process or other engineering controls (e.g., containment, decontamination, or ventilation) to control the concentrations of radioactive material in air.

(b) Use of Other Controls. When it is not practical to apply process or other engineering controls to control the concentrations of radioactive material in air to values below those that define an airborne radioactivity area, the licensee shall, consistent with maintaining the total effective dose equivalent ALARA, increase monitoring and limit intakes by one or more of the following means:

1. Control of access;

2. Limitation of exposure times;

3. Use of respiratory protection equipment; or

4. Other controls.

(c) If the licensee performs an ALARA analysis to determine whether or not respirators should be used, the licensee may consider safety factors other than radiological factors. The licensee should also consider the impact of respirator use on workers' industrial health and safety.

(d) Use of Individual Respiratory Protection Equipment.

1. If the licensee uses respiratory protection equipment to limit intakes pursuant to (10)(b) of this Rule:

(i) Except as provided in (10)(d)1.(ii) of this Rule, the licensee shall use only respiratory protection equipment that is tested and certified by or had certification extended by the National Institute for Occupational Safety and Health and the Mine Safety and Health Administration (NIOSH/MSHA).

(ii) The licensee may use equipment that has not been tested or certified by the National Institute for Occupational Safety and Health and the Mine Safety and Health Administration or had certification extended by NIOSH/MSHA or for which there is no schedule for testing or certification, provided the licensee has submitted to the Department and the Department has approved an application for authorized use of that equipment, including a demonstration by testing, or a demonstration on the basis of reliable test information, that the material and performance characteristics of the equipment are capable of providing the proposed degree of protection under anticipated conditions of use.

(iii) The licensee shall implement and maintain a respiratory protection program that includes:

(I) Air sampling sufficient to identify the potential hazard, permit proper equipment selection, and estimate exposures;

(II) Surveys and bioassays, as appropriate, to evaluate actual intakes;

(III) Testing of respirators for operability (user seal check for face sealing devices and functional check for others) immediately prior to each use;

(IV) Written procedures regarding: respirator selection; fit testing; breathing air quality; inventory control; storage, issuance, maintenance, repair, and quality assurance of respiratory protection equipment, including testing for operability immediately prior to each use; supervision and training of personnel; monitoring, including air sampling and bioassays; and record-keeping; and

(V) Determination by a physician prior to initial fitting of face sealing respirators; before the first use of non-face sealing respirators; and either every 12 months thereafter or periodically at a frequency determined by a physician, that the individual user is medically fit to use the respiratory protection equipment.

(VI) Fit testing, with fit factor " ten times the APF for negative pressure devices", and a fit factor " 500 for any positive pressure, continuous flow, and pressure-demand devices", before the first field use of tight fitting, face-sealing respirators and periodically thereafter at a frequency not to exceed one year. Fit testing must be performed with the facepiece operating in the negative pressure mode.

(iv) The licensee shall advise each respirator user that the user may leave the area at any time for relief from respirator use in the event of equipment malfunction, physical or psychological distress, procedural or communication failure, significant deterioration of operating conditions, or any other conditions that might require such relief.

(v) The licensee shall also consider limitations appropriate to the type and mode of use. When selecting respiratory devices the licensee shall provide for vision correction, adequate communication, low temperature work environments, and the concurrent use of other safety or radiological protection equipment. The licensee shall use equipment in such a way as not to interfere with the proper operation of the respirator.

(vi) Standby rescue persons are required whenever one-piece atmosphere-supplying suits, or any combination of supplied air respiratory protection device and personnel protective equipment are used from which an unaided individual would have difficulty extricating himself. The standby persons must be equipped with respiratory protection devices or other apparatus appropriate for the potential hazards. The standby rescue persons shall observe or otherwise maintain continuous communication with the workers (visual, voice, signal line, telephone, radio, or other suitable means), and be immediately available to assist them in case of a failure of the air supply or for any other reason that requires relief from distress. A sufficient number of standby rescue persons must be immediately available to assist all users of this type of equipment and to provide effective emergency rescue if needed.

(vii) Atmosphere-supplying respirators must be supplied with respirable air of grade D quality or better as defined by the Compressed Gas Association in publication G-7.1, "Commodity Specification for Air," 1997 and included in the regulations of the Occupational Safety and Health Administration (29 CFR 1910.134(i)(1)(ii)(A) through (E). Grade D quality air criteria include:

(I) Oxygen content (v/v) of 19.5-23.5%;

(II) Hydrocarbon (condensed) content of five (5) milligrams per cubic meter of air or less;

(III) Carbon monoxide (CO) content of ten (10) ppm or less;

(IV) Carbon dioxide content of 1,000 ppm or less; and

(V) Lack of noticeable odor.

(viii) The licensee shall ensure that no objects, materials or substances, such as facial hair, or any conditions that interfere with the face to facepiece seal or valve function, and that are under the control of the respirator wearer, are present between the skin of the wearer's face and the sealing surface of a tight-fitting respirator facepiece.

(ix) In estimating the dose to individuals from intake of airborne radioactive materials, the concentration of radioactive material in the air that is inhaled when respirators are worn is

initially assumed to be the ambient concentration in air without respiratory protection, divided by the assigned protection factor. If the dose is later found to be greater than the estimated dose, the corrected value must be used. If the dose is later found to be less than the estimated dose, the corrected value may be used.

(e) Further Restrictions on the Use of Respiratory Protection Equipment. The Department may impose restrictions in addition to those in (10)(b) and (10)(c) of this Rule and Appendix A to 10 CFR 20, in order to:

1. Ensure that the respiratory protection program of the licensee is adequate to limit doses to individuals from intakes of airborne radioactive materials consistent with maintaining total effective dose equivalent ALARA; and

2. Limit the extent to which a licensee may use respiratory protection equipment instead of process or other engineering controls.

(f) Application for use of higher assigned protection factors. The licensee shall obtain authorization from the Department before using assigned protection factors in excess of those specified in Appendix A to 10 CFR Part 20. The Department may authorize a licensee to use higher assigned protection factors on receipt of an application that:

1. Describes the situation for which a need exists for higher protection factors; and

2. Demonstrates that the respiratory protection equipment provides these higher protection factors under the proposed conditions of use.

(11) **Storage and Control of Licensed Material**

(a) Security and Control of Licensed Radioactive Material. The licensee shall secure licensed materials from unauthorized removal or access.

(b) Control of material sources of radiation not in storage. The licensee shall maintain constant surveillance and use devices or administrative procedures to prevent unauthorized use of licensed radioactive material that is in an unrestricted area and that is not in storage or in a patient.

(12) **Precautionary Procedures**

(a) Caution Signs.

1. Standard Radiation Symbol. Unless otherwise authorized by the Department, the symbol prescribed by (12)(a) of this Rule uses the colors magenta (or purple or black) on yellow background. The symbol prescribed is the three-bladed design as follows:

(i) Cross-hatched area is to be magenta, purple, or black; and

(ii) The background is to be yellow.

2. Exception to Color Requirements for Standard Radiation Symbol. Notwithstanding the requirements of (12)(a)1. of this Rule, licensees are authorized to label sources, source holders,

or device components containing sources of radiation that are subjected to high temperatures with conspicuously etched or stamped radiation caution symbols without a color requirement.

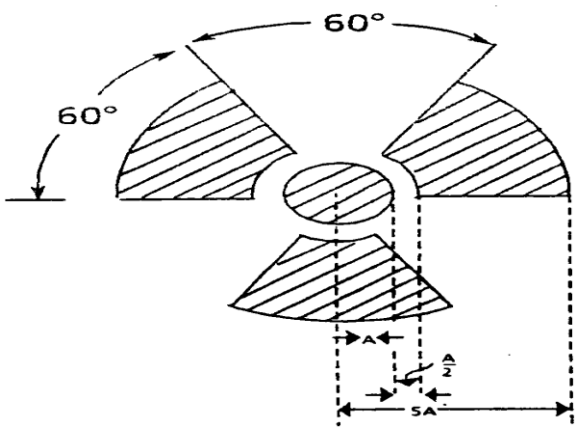

3. In addition to the contents of signs and labels prescribed in this Rule, the licensee shall provide, on or near the required signs and labels, additional information, as appropriate, to make individuals aware of potential radiation exposures and to minimize the exposures.

(b) Posting Requirements.

1. Posting of Radiation Areas. The licensee shall post each radiation area with a conspicuous sign or signs bearing the radiation symbol and the words "CAUTION, RADIATION AREA."

2. Posting of High Radiation Areas. The licensee shall post each high radiation area with a conspicuous sign or signs bearing the radiation symbol and the words "CAUTION, HIGH RADIATION AREA" or "DANGER, HIGH RADIATION AREA." The licensee may satisfy this requirement by posting the sign at the boundary of the high radiation area.

3. Posting of Very High Radiation Areas. The licensee shall post each very high radiation area with a conspicuous sign or signs bearing the radiation symbol and words "GRAVE DANGER, VERY HIGH RADIATION AREA."

4. Posting of Airborne Radioactivity Areas. The licensee shall post each airborne radioactivity area with a conspicuous sign or signs bearing the radiation symbol and the words "CAUTION, AIRBORNE RADIOACTIVITY AREA" or "DANGER, AIRBORNE RADIOACTIVITY AREA."

5. Posting of Areas or Rooms in which Licensed Material is Used or Stored. The licensee shall post each area or room in which there is used or stored an amount of licensed material exceeding ten times the quantity of such material specified in Appendix C of 10 CFR Part 20 with a conspicuous sign or signs bearing the radiation symbol and the words "CAUTION, RADIOACTIVE MATERIAL(S)" or "DANGER, RADIOACTIVE MATERIAL(S)".

(c) Exceptions to Posting Requirements.

1. A licensee is not required to post caution signs in areas or rooms containing sources of radiation for periods of less than eight hours, if all of the following conditions are met:

(i) The sources of radiation are constantly attended during these periods by an individual who takes the precautions necessary to prevent the exposure of individuals to sources of radiation in excess of the limits established in this Rule; and

(ii) The area or room is subject to the licensee's control.

2. Rooms or other areas in hospitals that are occupied by patients are not required to be posted with caution signs pursuant to (12)(b) of this Rule provided that the patient could be released from licensee control pursuant to Rule 391-3-17-.05.

3. A room or area is not required to be posted with a caution sign pursuant to (12)(b) of this Rule because of the presence of a sealed source provided that the radiation level at 30 centimeters from the surface of the source container or housing does not exceed 0.005 rem (0.05 mSv) per hour.

(d) Labeling Containers and Radiation Machines.

1. The licensee shall ensure that each container of licensed material bears a durable, clearly visible label bearing the radiation symbol and the words "CAUTION, RADIOACTIVE MATERIAL" or "DANGER, RADIOACTIVE MATERIAL." The label shall also provide information such as the radionuclides present, an estimate of the quantity of radioactivity, the date for which the activity is estimated, radiation levels, kinds of materials, and mass enrichment, to permit individuals handling or using the containers, or working in the vicinity of the containers, to take precautions to avoid or minimize exposures.

2. Each licensee shall, prior to removal or disposal of empty uncontaminated containers to unrestricted areas, remove or deface the radioactive material label or otherwise clearly indicate that the container no longer contains radioactive materials.

(e) Exemptions to Labeling Requirements. A licensee is not required to label:

1. Containers holding licensed material in quantities less than the quantities listed in Appendix C of 10 CFR 20;

2. Containers holding licensed material in concentrations less than those specified in Table III of Appendix B of 10 CFR 20;

3. Containers attended by an individual who takes the precautions necessary to prevent the exposure of individuals in excess of the limits established by this Rule;

4. Containers when they are in transport and packaged and labeled in accordance with the regulations of the U.S. Department of Transportation[4];

5. Containers that are accessible only to individuals authorized to handle or use them or to work in the vicinity of the containers, if the contents are identified to these individuals by a readily available written record. Examples of containers of this type are containers in locations

[4] Labeled with a Radioactive White I, Yellow II, or Yellow III label as specified in U.S. Department of Transportation (DOT) regulations, 49 CFR 172.403-172.440.

such as water-filled canals, storage vaults, or hot cells. The record shall be retained as long as the containers are in use for the purpose indicated on the record; or

6. Installed manufacturing or process equipment, such as chemical process equipment, piping, and tanks.

(f) Procedures for Receiving and Opening Packages.

1. Each licensee who is authorized to receive a package containing quantities of radioactive material in excess of a Type A quantity, as defined in Rule 391-3-17-.06(3), shall make arrangements to receive:

(i) The package when the carrier offers it for delivery; or

(ii) The notification of the arrival of the package at the carrier's terminal and to take possession of the package expeditiously.

2. Each licensee shall:

(i) Monitor the external surfaces of a labeled[5] package for radioactive contamination unless the package contains only radioactive material in the form of gas or in "special form" as defined in Rule 391-3-17-.01(2);

(ii) Monitor the external surfaces of a labeled package for radiation levels unless the package contains quantities of radioactive material that are less than or equal to the Type A quantity, as defined in Rule 391-3-17-.06 (3), and the radioactive material is in the form of a gas or in special form as defined in Rule 391-3-17-.01(2); and

(iii) Monitor all packages known to contain radioactive material for radioactive contamination and radiation levels if the package has evidence of potential contamination, such as packages that are crushed, wet, or damaged.

3. The licensee shall perform the monitoring required by (12)(f)2. of this Rule as soon as practicable after receipt of the package, but not later than three hours after the package is received at the licensee's facility if it is received during the licensee's normal working hours, or not later than three hours from the beginning of the next working day if it is received after working hours.

4. The licensee shall immediately notify the final delivery carrier and the Department by telephone, telegram, mailgram, or facsimile, when:

(i) Removable radioactive surface contamination exceeds the limits of Rule 391-3-17-.06(16)(i); or

(ii) External radiation levels exceed the limits of Rule 391-3-17-.06(16)(j).

---

[5] Labeling of packages containing radioactive materials is required by the U.S. Department of Transportation (DOT) if the amount and type of radioactive material exceeds the limits for an excepted quantity or article as defined and limited by U.S. Department of Transportation (DOT) regulations 49 CFR 173.403(m) and (w) and 173.421-.424.

5. Each licensee shall:

(i) Establish, maintain, and retain written procedures for safely opening packages in which radioactive material is received; and

(ii) Ensure that the procedures are followed and that special instructions for the type of package being opened are followed.

6. Licensees transferring special form sources in vehicles owned or operated by the licensee to and from a work site are exempt from the contamination monitoring requirements of (12)(f)2. of this Rule, but are not exempt from the monitoring requirement in (12)(f)2. of this Rule for measuring radiation levels to ensure that the source is still properly lodged in its shield.

(13) **Waste Disposal**

(a) General Requirements.

1. A licensee shall dispose of licensed material only:

(i) By transfer to an authorized recipient as provided in (13)(i) of this Rule and in Rule 391-3-17-.02(19), or to the U.S. Department of Energy;

(ii) By decay in storage;

(iii) By release in effluents within the limits in (5)(i) of this Rule; or

(iv) As authorized pursuant to (13)(b), (13)(c), (13)(d), (13)(e), or (13)(k) of this Rule.

2. A person shall be specifically licensed by the Department, the U.S. Nuclear Regulatory Commission, an Agreement State, or a Licensing State to receive waste containing licensed material from other persons for:

(i) Treatment prior to disposal;

(ii) Treatment or disposal by incineration;

(iii) Decay in storage;

(iv) Disposal at a land disposal facility licensed pursuant to 10 CFR Part 61, or equivalent regulations of an Agreement State; or

(v) Storage until transferred to a disposal facility authorized to receive the waste.

(b) Method for Obtaining Approval of Proposed Disposal Procedures. A licensee or applicant for a license may apply to the Department for approval of proposed procedures not otherwise authorized in this Chapter to dispose of licensed material generated in the licensee's operations. Each application shall include:

1. A description of the waste containing licensed material to be disposed of, including the physical and chemical properties that have an impact on risk evaluation, and the proposed manner and conditions of waste disposal;

2. An analysis and evaluation of pertinent information on the nature of the environment;

3. The nature and location of other potentially affected facilities; and

4. Analyses and procedures to ensure that doses are maintained ALARA and within the dose limits in this Rule.

(c) Disposal by Release into Sanitary Sewerage.

1. A licensee may discharge licensed material into sanitary sewerage if each of the following conditions is satisfied:

(i) The material is readily soluble, or is readily dispersible biological material, in water;

(ii) The quantity of licensed radioactive material that the licensee releases into the sewer in one month divided by the average monthly volume of water released into the sewer by the licensee does not exceed the concentration listed in Table III of Appendix B of 10 CFR 20;

(iii) If more than one radionuclide is released, the following conditions must also be satisfied:

(I) The licensee shall determine the fraction of the limit in Table III of Appendix B of 10 CFR 20, represented by discharges into sanitary sewerage by dividing the actual monthly average concentration of each radionuclide released by the licensee into the sewer by the concentration of that radionuclide listed in Table III of Appendix B of 10 CFR 20; and

(II) The sum of the fractions for each radionuclide required by (13)(c)1.(iii)(I) of this Rule does not exceed unity; and

(iv) The total quantity of licensed radioactive material that the licensee releases into the sanitary sewerage system in a year does not exceed five Ci (185 GBq) of hydrogen-3, one Ci (37 GBq) of carbon-14, and one Ci (37 GBq) of all other radioactive materials combined.

2. Excreta from individuals undergoing medical diagnosis or therapy with radioactive material are not subject to the limitations contained in (13)(c)1. of this Rule.

(d) Treatment or Disposal by Incineration. A licensee may treat or dispose of licensed material by incineration only in the forms and concentrations specified in (13)(e) of this Rule or as specifically approved by the Department pursuant to (13)(b) of this Rule.

(e) Disposal of Specific Wastes.

1. A licensee may dispose of the following licensed material as if it were not radioactive:

(i) 0.05 μCi (1.85 kBq) or less of hydrogen-3, carbon-14, or iodine-125 per gram of medium used for liquid scintillation counting; and

(ii) 0.05 μCi (1.85 kBq) or less of hydrogen-3, carbon-14, or iodine-125 per gram of animal tissue, averaged over the weight of the entire animal.

2. A licensee shall not dispose of tissue under (13)(e)1.(ii) of this Rule in a manner that would permit its use either as food for humans or as animal feed.

3. The licensee shall maintain records in accordance with (14)(i) of this Rule.

(f) Classification of Radioactive Waste for Near-Surface Disposal.

1. Considerations. Determination of the classification of radioactive waste involves two considerations. First, consideration must be given to the concentration of long-lived radionuclides (and their shorter-lived precursors) whose potential hazard will persist long after such precautions as institutional controls, improved waste form, and deeper disposal have ceased to be effective. These precautions delay the time when long-lived radionuclides could cause exposures. In addition, the magnitude of the potential dose is limited by the concentration and availability of the radionuclide at the time of exposure. Second, consideration must be given to the concentration of shorter-lived radionuclides for which requirements on institutional controls, waste form, and disposal methods are effective.

2. Classes of waste.

(i) Class A waste is waste that is usually segregated from other waste classes at the disposal site. The physical form and characteristics of Class A waste must meet the minimum requirements set forth in (13)(g)1. of this Rule. If Class A waste also meets the stability requirements set forth in (13)(g)2. of this Rule, it is not necessary to segregate the waste for disposal.

(ii) Class B waste is waste that must meet more rigorous requirements on waste form to ensure stability after disposal. The physical form and characteristics of Class B waste must meet both the minimum and stability requirements set forth in (13)(g) of this Rule.

(iii) Class C waste is waste that not only must meet more rigorous requirements on waste form to ensure stability but also requires additional measures at the disposal facility to protect against inadvertent intrusion. The physical form and characteristics of Class C waste must meet both the minimum and stability requirements set forth in (13)(g) of this Rule.

3. Classification determined by long-lived radionuclides. If the waste contains only radionuclides listed in Table 1, classification shall be determined as follows:

(i) If the concentration does not exceed 0.1 times the value in Table 1, the waste is Class A.

(ii) If the concentration exceeds 0.1 times the value in Table 1, the waste is Class C.

(iii) If the concentration exceeds the value in Table 1, the waste is not generally acceptable for near-surface disposal.

(iv) For wastes containing mixtures of radionuclides listed in Table 1, the total concentration shall be determined by the sum of fractions rule described in (13)(f)7. of this Rule.

Table 1

Radionuclide	Concentration (Curies/cubic meter)
C-14	8
C-14 in activated metal	80
Ni-59 in activated metal	220
Nb-94 in activated metal	0.2
Tc-99	3
I-129	0.08
Alpha-emitting transuranic radionuclides with half- life greater than five years	100 [(a)]
Pu-241	3,500 [(a)]
Cm-242	20,000 [(a)]
Ra-226	100 [(a)]

[(a)] Units are in nanocuries per gram.

4. Classification determined by short-lived radionuclides. If the waste does not contain any of the radionuclides listed in Table 1, classification shall be determined based on the concentrations shown in Table 2. If a nuclide is not listed in Table 2, it does not need to be considered in determining the waste class.

(i) If the concentration does not exceed the value in Column 1, the waste is Class A.

(ii) If the concentration exceeds the value in Column 1, but does not exceed the value in Column 2, the waste is Class B.

(iii) If the concentration exceeds the value in Column 2, but does not exceed the value in Column 3, the waste is Class C.

(iv) If the concentration exceeds the value in Column 3, the waste is not generally acceptable for near-surface disposal.

(v) For wastes containing mixtures of the radionuclides listed in Table 2, the total concentration shall be determined by the sum of fractions rule described in (13)(f)7. of this Rule.

Table 2

Radionuclide	Concentration (Curies/ cubic meter) Column 1	Column 2	Column 3
Total of all radionuclides with less than five year half-life	700	[b]	[b]
H-3	40	[b]	[b]
Co-60	700	[b]	[b]
Ni-63	3.5	70	700
Ni-63 in activated metal	35	700	7000
Sr-90	0.04	150	7000
Cs-137	1	44	4600

[b] There are no limits established for these radionuclides in Class B or C wastes. Practical considerations such as the effects of external radiation and internal heat generation on transportation, handling, and disposal will limit the concentrations for these wastes. These wastes shall be Class B unless the concentrations of other radionuclides in Table 2 determine the waste to be Class C independent of these radionuclides.

5. Classification determined by both long- and short-lived radionuclides. If the waste contains a mixture of radionuclides, some of which are listed in Table 1 and some of which are listed in Table 2, classification shall be determined as follows:

(i) If the concentration of a radionuclide listed in Table 1 is less than 0.1 times the value listed in Table 1, the class shall be that determined by the concentration of radionuclides listed in Table 2.

(ii) If the concentration of a radionuclide listed in Table 1 exceeds 0.1 times the value listed in Table 1, the waste shall be Class C, provided the concentration of radionuclides listed in Table 2 does not exceed the value shown in Column 3 of Table 2.

6. Classification of wastes with radionuclides other than those listed in Tables 1 and 2. If the waste does not contain any radionuclides listed in either Table 1 or 2, it is Class A.

7. The sum of the fractions rule for mixtures of radionuclides. For determining classification for waste that contains a mixture of radionuclides, it is necessary to determine the sum of fractions by dividing each radionuclide's concentration by the appropriate limit and adding the resulting values. The appropriate limits must all be taken from the same column of the same table. The sum of the fractions for the column must be less than 1.0 if the waste class is to be determined by that column. Example: A waste contains Sr-90 in a concentration of 50 Ci/m^3 and Cs-137 in a concentration of 22 Ci/m^3. Since the concentrations both exceed the values in Column 1, Table 2, they must be compared to Column 2 values. For Sr-90 fraction, 50/150 = 0.33; for Cs-137 fraction, 22/44 = 0.5; the sum of the fractions = 0.83. Since the sum is less than 1.0, the waste is Class B.

8. Determination of concentrations in wastes. The concentration of a radionuclide may be determined by indirect methods such as the use of scaling factors, which relate the inferred concentration of one radionuclide to another that is measured, or radionuclide material accountability, if there is reasonable assurance that the indirect methods can be correlated with

actual measurements. The concentration of a radionuclide may be averaged over the volume of the waste or weight of the waste if the units are expressed as nanocuries per gram.

(g) Radioactive Waste Characteristics.

1. The following are minimum requirements for all classes of waste and are intended to facilitate handling and provide protection of health and safety of personnel at the disposal site:

(i) Wastes shall be packaged in conformance with the conditions of the license issued to the site operator to which the waste will be shipped. Where the conditions of the site license are more restrictive than the provisions of this Chapter, the site license conditions shall govern.

(ii) Wastes shall not be packaged for disposal in cardboard or fiberboard boxes.

(iii) Liquid waste shall be packaged in sufficient absorbent material to absorb twice the volume of the liquid.

(iv) Solid wastes containing liquid shall contain as little free-standing and non-corrosive liquid as is reasonably achievable, but in no case shall the liquid exceed one percent of the volume.

(v) Wastes shall not be readily capable of detonation or of explosive decomposition or reaction at normal pressures and temperatures or of explosive reaction with water.

(vi) Wastes shall not contain, or be capable of generating, quantities of toxic gases, vapors, or fumes harmful to persons transporting, handling, or disposing of the waste. This does not apply to radioactive gaseous wastes packaged in accordance with (13)(g)1.(viii) of this Rule.

(vii) Pyrophoric materials contained in wastes shall be treated, prepared, and packaged to be nonflammable.

(viii) Wastes in a gaseous form shall be packaged at an absolute pressure that does not exceed 1.5 atmospheres at 20 degrees Celsius. Total activity shall not exceed 100 Curies (3.7 TBq) per container.

(ix) Wastes containing hazardous, biological, pathogenic, or infectious material shall be treated to reduce to the maximum extent practicable the potential hazard from the non-radiological materials.

2. The following requirements are intended to provide stability of the waste. Stability is intended to ensure that the waste does not degrade and affect overall stability of the site through slumping, collapse, or other failure of the disposal unit and thereby lead to water infiltration. Stability is also a factor in limiting exposure to an inadvertent intruder, since it provides a recognizable and nondispersible waste.

(i) Waste shall have structural stability. A structurally stable waste form will generally maintain its physical dimensions and its form under the expected disposal conditions such as the weight of overburden and compaction equipment, the presence of moisture and microbial activity, and internal factors such as radiation effects and chemical changes. Structural stability can be provided by the waste form itself, processing the waste to a stable form, or placing the waste in a disposal container or structure that provides stability after disposal.

(ii) Notwithstanding the provisions in (13)(g)1.(iii) and (iv) of this Rule, liquid wastes, or wastes containing liquid, shall be converted into a form that contains as little freestanding and noncorrosive liquid as is reasonably achievable, but in no case shall the liquid exceed one percent of the volume of the waste when the waste is in a disposal container designed to ensure stability, or 0.5 percent of the volume of the waste for waste processed to a stable form.

(iii) Void spaces within the waste and between the waste and its package shall be reduced to the extent practicable.

h) Labeling. Each package of waste shall be clearly labeled to identify whether it is Class A, Class B, or Class C waste in accordance with (13)(f) of this Rule.

(i) Transfer for Disposal and Manifest.

1. A waste generator, collector, or processor who transports, or offers for transportation, low-level radioactive waste intended for ultimate disposal at a licensed low-level radioactive waste land disposal facility must prepare a Manifest reflecting information requested on applicable NRC Forms 540 or equivalent forms (Uniform Low-Level Radioactive Waste Manifest (Shipping Paper)) and 541 (Uniform Low-Level Radioactive Waste Manifest (Container and Waste Description)) and if necessary, on an applicable NRC Form 542 or equivalent form (Uniform Low-Level Radioactive Waste Manifest (Manifest Index and Regional Compact Tabulation)). NRC Forms 540 and 540A or equivalent forms must be completed and must physically accompany the pertinent low-level radioactive waste shipment. Upon agreement between shipper and consignee, NRC Forms 541 and 541A and 542 and 542A or equivalent forms may be completed, transmitted, and stored in electronic media with the capability for producing legible, accurate, and complete records on the respective forms. Licensees are not required by the Department to comply with the manifesting requirements of this Chapter when they ship:

(i) LLW for processing and expect its return (i.e., for storage under their license) prior to disposal at a licensed land disposal facility;

(ii) LLW that is being returned to the licensee who is the "waste generator" or "generator," as defined in this Rule; or

(iii) Radioactively contaminated material to a "waste processor" that becomes the processor’s residual waste.

For guidance in completing these forms, refer to the instructions that accompany the forms. Copies of manifests required by this Rule may be legible carbon copies, photocopies, or computer printouts that reproduce the data in the format of the uniform manifest. NRC Forms 541 and 541A and 542 and 542A or equivalent forms and the accompanying instructions, in hard copy, may be obtained from Radioactive Materials Program, 4244 International Parkway, Suite 120, Atlanta, Georgia 30354, or current address.

This Rule includes information requirements of the Department of Transportation, as codified in 49 CFR Part 172. Information on hazardous, medical, or other waste, required to meet EPA regulations, as codified in 40 CFR Parts 259, 261 or elsewhere, is not addressed in this Rule, and must be provided on the required EPA forms. However, the required EPA forms must accompany the Uniform Low-Level Radioactive Waste Manifest required by this Rule.

2. General Information. The shipper of the low-level radioactive waste shall provide the following information on the uniform manifest:

(i) The name, facility address, and telephone number of the licensee shipping the waste;

(ii) An explicit declaration indicting whether the shipper is acting as a waste generator, collector, processor, or a combination of these identifiers for purposes of the manifested shipment; and

(iii) The name, address, and telephone number, or the name and EPA identification number for the carrier transporting the waste.

3. Shipment Information. The shipper of the radioactive waste shall provide the following information regarding the waste shipment on the uniform manifest:

(i) The date of the waste shipment;

(ii) The total number of packages/disposal containers;

(iii) The total disposal volume and disposal weight in the shipment;

(iv) The total radionuclide activity in the shipment;

(v) The activity of each of the radionuclides H-3, C-14, Tc-99, and I-129 contained in the shipment; and

(vi) The total masses of U-233, U-235, and plutonium in the form of special nuclear material, and the total mass of uranium and thorium in the form of source material.

4. Disposal Container and Waste Information. The shipper of the radioactive waste shall provide the following information on the uniform manifest regarding the waste and each disposal container of waste in the shipment:

(i) An alphabetic or numeric identification that uniquely identifies each disposal container in the shipment;

(ii) A physical description of the disposal container, including the manufacturer and model of any high integrity container;

(iii) The volume displaced by the disposal container;

(iv) The gross weight of the disposal container, including the waste;

(v) For waste consigned to a disposal facility, the maximum radiation level at the surface of each disposal container;

(vi) A physical and chemical description of the waste;

(vii) The total weight percentage of chelating agent for any waste containing more than 0.1 percent chelating agent by weight, plus the identity of the principal chelating agent;

(viii) The approximate volume of waste within a container;

(ix) The sorbing or solidification media, if any, and the identity of the solidification media vendor and brand name;

(x) The identities and activities of individual radionuclides contained in each container, the masses of U-233, U-235, and plutonium in the form of special nuclear material, and the masses of uranium and thorium in the form of source material. For discrete waste types (i.e., activated materials, contaminated equipment, mechanical filters, sealed source/devices, and wastes in solidification/stabilization media), the identities and activities of individual radionuclides associated with a disposal container shall be reported;

(xi) The total radioactivity within each container; and

(xii) For wastes consigned to a disposal facility, the classification of the waste pursuant to (13)(f). Waste not meeting the structural stability requirements of (13)(g)2. must be identified.

5. Uncontainerized Waste Information. The shipper of the radioactive waste shall provide the following information on the uniform manifest regarding a waste shipment delivered without a disposal container:

(i) The approximate volume and weight of the waste;

(ii) A physical and chemical description of the waste;

(iii) The total weight percentage of chelating agent if the chelating agent exceeds 0.1 percent by weight, plus the identity of the principal chelating agent;

(iv) For waste consigned to a disposal facility, the classification of the waste pursuant to (13)(f) of this Rule. Waste not meeting the structural stability requirements of (13)(g)2. of this Rule must be identified;

(v) The identities and activities of individual radionuclides contained in the waste, the masses of U-233, U-235, and plutonium in the form of special nuclear material, and the masses of uranium and thorium in the form of source material; and

(vi) For wastes consigned to a disposal facility, the maximum radiation levels at the surface of the waste.

6. Multi-Generator Disposal Container Information. This section applies to disposal containers enclosing mixtures of waste originating from different generators. (Note: The origin of the LLW resulting from a processor’s activities may be attributable to one or more "generators" (including "waste generators") as defined in this Chapter). It also applies to mixtures of wastes shipped in an uncontainerized form, for which portions of the mixture within the shipment originate from different generators.

(i) For homogeneous mixtures of waste, such as incinerator ash, provide the waste description applicable to the mixture and the volume of the waste attributed to each generator.

(ii) For heterogeneous mixtures of waste, such as the combined products from a large compactor, identify each generator contributing waste to the disposal container, and, for

discrete waste types (i.e., activated materials, contaminated equipment, mechanical filters, sealed source/devices, and wastes in solidification/stabilization media), the identities and activities of individual radionuclides contained on these waste types within the disposal container. For each generator, provide the following:

(I) The volume of waste within the disposal container;

(II) A physical and chemical description of the waste, including the solidification agent, if any;

(III) The total weight percentage of chelating agents for any disposal container containing more than 0.1 percent chelating agent by weight, plus the identity of the principal chelating agent;

(IV) The sorbing or solidification media, if any, and the identity of the solidification media vendor and brand name if the media is claimed to meet stability requirements of (13)(g)2. of this Rule; and

(V) Radionuclide identities and activities contained in the waste, the masses of U-233, U-235, and plutonium in the form of special nuclear material, and the masses of uranium and thorium in the form of source material if contained in the waste.

7. An authorized representative of the waste generator, processor, or collector shall certify by signing and dating the shipment manifest that the transported materials are properly classified, described, packaged, marked, and labeled and are in proper condition for transportation according to the applicable regulations of the Department of Transportation and the Department. A collector in signing the certification is certifying that nothing has been done to the collected waste which would invalidate the waste generator's certification.

8. Control and Tracking. Any licensee who transfers radioactive waste to a land disposal facility or a licensed waste collector shall comply with all of the following requirements. Any licensee who transfers waste to a licensed waste processor for waste treatment or repackaging shall comply with the requirements of (13)(i)8.(iv) through (ix). A licensee shall:

(i) Prepare all wastes so that the waste is classified according to (13)(f) and meets waste characteristics requirements in (13)(g);

(ii) Label each disposal container (or transport package if potential radiation hazards preclude labeling of the individual disposal container) of waste to identify whether it is Class A waste, Class B waste, Class C waste, or greater than Class C waste, in accordance with (13)(f);

(iii) Conduct a quality assurance program to assure compliance with (13)(f) and (13)(g) (the program must include management evaluation of audits);

(iv) Prepare the NRC Forms 540 and 540A or Equivalent Forms, "Uniform Low-Level Radioactive Waste Manifest" as required by this Section;

(v) Forward a copy or electronically transfer the Uniform Low-Level Radioactive Waste Manifest to the intended consignee so that either:

(I) Receipt of the manifest precedes the LLW shipment, or

(II) The manifest is delivered to the consignee with the waste at the time the waste is transferred to the consignee, or

(III) Both (I) and (II) is also acceptable.

(vi) Include NRC Form 540 (and NRC 540A, if required) or Equivalent Forms with the shipment regardless of the option in (13)(i)8.(v);

(vii) Receive acknowledgment of the receipt of the shipment in the form of a signed copy of NRC Form 540 or Equivalent Form;

(viii) Retain a copy of or electronically store the Uniform Low-Level Radioactive Waste Manifest and documentation of acknowledgment of receipt as the record of transfer of licensed material as required by Rule 391-3-17-.02; and

(ix) For any shipments or any part of a shipment for which acknowledgment of receipt has not been received within the times set forth in this section, conduct an investigation in accordance with (13)(i)12.

9. Any waste collector licensee who handles only prepackaged waste shall:

(i) Acknowledge receipt of the waste from the shipper within one week of receipt by returning a signed copy of NRC Form 540 or Equivalent Form.

(ii) Prepare a new manifest to reflect consolidated shipments that meet the requirements of this section. The waste collector shall ensure that, for each container of waste in the shipment, the manifest identifies the generator of that container of waste;

(iii) Forward a copy or electronically transfer the Uniform Low-Level Radioactive Waste Manifest to the intended consignee so that either:

(I) Receipt of the manifest precedes the LLW shipment, or

(II) The manifest is delivered to the consignee with the waste at the time the waste is transferred to the consignee, or

(III) Both (I) and (II) is also acceptable;

(iv) Include NRC Form 540 (and NRC From 540A, if required) or Equivalent Forms, with the shipment regardless of the option chosen in (13)(i)9.(iii);

(v) Receive acknowledgment of the receipt of the shipment in the form of a signed copy of NRC Form 540 or Equivalent Form;

(vi) Retain a copy of or electronically store the Uniform Low-Level Radioactive Waste Manifest and documentation of acknowledgment of receipt;

(vii) For any shipments or any part of a shipment for which acknowledgment of receipt has not been received within the times set forth in this section, conduct an investigation in accordance with (13)(i)12.; and

(viii) Notify the shipper and the Department when any shipment, or part of a shipment, has not arrived within 60 days after receipt of an advance manifest, unless notified by the shipper that the shipment has been canceled.

10. Any licensed waste processor who treats or repackages waste shall:

(i) Acknowledge receipt of the waste from the shipper within one week of receipt by returning a signed copy of NRC Form 540 or Equivalent Form;

(ii) Prepare a new manifest that meets the requirements of this section. Preparation of the new manifest reflects that the processor is responsible for meeting these requirements. For each container of waste in the shipment, the manifest shall identify the waste generators, the preprocessed waste volume, and other information as required in (13)(i)6.;

(iii) Prepare all wastes so that the waste is classified according to (13)(f) and meets the waste characteristics requirements in (13)(g);

(iv) Label each package of waste to identify whether it is Class A waste, Class B waste, or Class C waste, in accordance with (13)(f) and (13)(h);

(v) Conduct a quality assurance program to assure compliance with (13)(f) and (13)(g) (the program shall include management evaluation of audits);

(vi) Forward a copy or electronically transfer the Uniform Low-Level Radioactive Waste Manifest to the intended consignee so that either:

(I) Receipt of the manifest precedes the LLW shipment, or

(II) The manifest is delivered to the consignee with the waste at the time the waste is transferred to the consignee, or

(III) Both (I) and (II) is also acceptable;

(vii) Include NRC Form 540 (and NRC Form 540A if required) or Equivalent Forms, with the shipment regardless of the option chosen in (13)(i)10.(vi);

(viii) Receive acknowledgment of the receipt of the shipment in the form of a signed copy of NRC Form 540 or Equivalent Form;

(ix) Retain a copy of or electronically store the Uniform Low-Level Radioactive Waste Manifest and documentation of acknowledgment of receipt as the record of transfer of licensed material as required by Rule 391-3-17-.02;

(x) For any shipment or any part of a shipment for which acknowledgment of receipt has not been received within the times set forth in this section, conduct an investigation in accordance with (13)(i)12.; and

(xi) Notify the shipper and the Department when any shipment, or any part of a shipment, has not arrived within 60 days after receipt of an advance manifest, unless notified by the shipper that the shipment has been canceled.

11. The land disposal facility operator shall:

(i) Acknowledge receipt of the waste within one week of receipt by returning, as a minimum, a signed copy of NRC Form 540 or Equivalent Form to the shipper. The shipper to be notified is the licensee who last possessed the waste and transferred the waste to the operator. If any discrepancy exists between materials listed on the Uniform Low-Level Radioactive Waste Manifest and materials received, copies or electronic transfer of the affected forms must be returned indicating that discrepancy.

(ii) Maintain copies of all completed manifests and electronically store the information until the Department terminates the license; and

(iii) Notify the shipper and the Department when any shipment, or part of a shipment, has not arrived within 60 days after receipt of an advance manifest, unless notified by the shipper that the shipment has been canceled.

12. Any shipments or part of a shipment for which acknowledgment is not received within the times set forth in this section must:

(i) Be investigated by the shipper if the shipper has not received notification or receipt within 20 days after transfer; and

(ii) Be traced and reported. The investigation shall include tracing the shipment and filing a report with the Department. Each licensee who conducts a trace investigation shall file a written report with the Department within two weeks of completion of the investigation.

13. The requirements of this section are to:

(i) Control transfers of low-level radioactive waste by any waste generator, waste collector, or waste processor licensee, as defined in this section, who ships low-level waste either directly, or indirectly through a waste collector or waste processor, to a licensed low-level waste land disposal facility (as defined in 10 CFR 61);

(ii) Establish a manifest tracking system; and

(iii) Supplement existing requirements concerning transfers and recordkeeping for those wastes.

14. Any licensee shipping radioactive waste intended for ultimate disposal at a licensed land disposal facility must document the information required on NRC's Uniform Low-Level Radioactive Waste Manifest and transfer this recorded manifest information to the intended consignee in accordance with (13)(i)1. through 12. of this Rule.

15. Each shipment manifest must include a certification by the waste generator as specified in (13)(i)7. of this Rule..

16. Each person involved in the transfer for disposal and disposal of waste, including the waste generator, waste collector, waste processor, and disposal facility operator, shall comply with the requirements specified in (13)(i)8. of this Rule

17. Any licensee shipping byproduct material as defined in paragraphs (3) and (4) of the definition of *Byproduct material* set forth in Rule .01(2)(o), intended for ultimate disposal at a land disposal facility licensed under 10 CFR 61 must document the information required on the NRC's Uniform Low-Level Radioactive Waste Manifest and transfer this recorded manifest information to the intended consignee in accordance with (13)(i)1. through 12. of this Rule.

(j) Compliance with Environmental and Health Protection Regulations. Nothing in this Rule relieves the licensee from complying with other applicable Federal, State, and local regulations governing other toxic or hazardous properties of materials that may be disposed of pursuant to this Rule.

(k) Disposal of Certain Byproduct Material

1. Licensed material as defined in Rule .01(2)(o)3. and 4. of the definition of Byproduct material may be disposed of in accordance with .03(13) of this chapter, even though it is not defined as low-level radioactive waste. Therefore, any licensed byproduct material being disposed of at a facility, or transferred for ultimate disposal at a facility licensed under .03(13) of this chapter, must meet the requirements of Rule .03(13)(i).

2. A licensee may dispose of byproduct material, as defined in Rule .01(2)(o)3. and 4. of the definition of Byproduct, at a disposal facility authorized to dispose of such material in accordance with any Federal or State solid or hazardous waste law, including the Solid Waste Disposal Act, as authorized under the Energy Policy Act of 2005.

(14) **Records**

(a) General Provisions.

1. Each licensee shall use the units of Curie, rad, rem, and dpm , including multiples and subdivisions and shall clearly indicate the units of all quantities on records required by this Rule.

2. In the records required by this rule, the licensee may record quantities in SI units in parentheses following each of the units specified in (14)(a)1. However, all quantities must be recorded as stated in (14)(a)1.

3. The licensee shall make a clear distinction among the quantities entered on the records required by this Rule, such as total effective dose equivalent, shallow dose equivalent, lens dose equivalent, deep dose equivalent, total organ dose equivalent, or committed effective dose equivalent.

(b) Records of Radiation Protection Programs.

1. Each licensee shall maintain records of the Radiation Protection Program required pursuant to (4) of this Rule, including:

(i) The provisions of the Program; and

(ii) Audits and other reviews of Program content and implementation.

2. The licensee shall retain the records required by (14)(b)1.(i) of this Rule until the Department terminates each pertinent license requiring the record. The licensee shall retain each of the records required by (14)(b)1.(ii) of this Rule for three years after the record is made.

(c) Records of Surveys.

1. Each licensee shall maintain records showing the results of surveys and calibrations required by (8)(a) and (12)(f)2. of this Rule. The licensee shall retain each of these records for three years after the record is made.

2. The licensee shall retain each of the following records until the Department terminates each pertinent license requiring the record:

(i) Records of the results of surveys to determine the dose from external sources of radiation used, in the absence of or in combination with individual monitoring data, in the assessment of individual dose equivalents;

(ii) Records of the results of measurements and calculations used to determine individual intakes of radioactive material and used in the assessment of internal dose;

(iii) Records showing the results of air sampling, surveys, and bioassays required pursuant to (10)(d)1.(iii)(I) and (II) of this Rule; and

(iv) Records of the results of measurements and calculations used to evaluate the release of radioactive effluents to the environment.

3. Upon termination of the license, the licensee shall permanently store records on Department Form "Occupational Radiation Exposure History" or equivalent or shall make provision with the Department for their transfer to the Department.

(d) Records of Tests for Leakage or Contamination of Sealed Sources. Records of tests for leakage or contamination of sealed sources required by (6) of this Rule shall be kept in units of microcuries or becquerels and maintained for inspection by the Department for three years after the record is made.

(e) Records of Prior Occupational Dose.

1. The licensee shall retain the records of prior occupational dose and of exposure history as specified in (5)(e) of this Rule on Department Form "Occupational Radiation Exposure History" or equivalent until the Department terminates each pertinent license requiring this record. The licensee shall retain records used in preparing Department Form "Occupational Radiation Exposure History" for three years after the record is made.

2. Upon termination of the license, the licensee shall permanently store records on Department Form "Occupational Radiation Exposure History" or equivalent or shall make provision with the Department for their transfer to the Department.

(f) Records of Planned Special Exposures.

1. For each use of the provisions of (5)(e) of this Rule for planned special exposures, the licensee shall maintain records that describe:

(i) The exceptional circumstances requiring the use of a planned special exposure;

(ii) The name of the management official who authorized the planned special exposure and a copy of the signed authorization;

(iii) What actions were necessary;

(iv) Why the actions were necessary;

(v) What precautions were taken to assure that doses were maintained ALARA;

(vi) What individual and collective doses were expected to result; and

(vii) The doses actually received in the planned special exposure.

2. The licensee shall retain the records until the Department terminates each pertinent license requiring these records.

3. Upon termination of the license, the licensee shall permanently store records on Department Form "Occupational Radiation Exposure History" or equivalent or shall make provision with the Department for their transfer to the Department.

(g) Records of Individual Monitoring Results.

1. Record-keeping Requirement. Each licensee shall maintain records of doses received by all individuals for whom monitoring was required pursuant to (8)(b) of this Rule and records of doses received during planned special exposures, accidents, and emergency conditions. Assessments of dose equivalent and records made using units in effect before January 1, 1994, need not be changed. These records shall include when applicable:

(i) The deep dose equivalent to the whole body, lens dose equivalent, shallow dose equivalent to the skin, and shallow dose equivalent to the extremities;

(ii) The estimated intake of radionuclides (see (5)(b) of this Rule);

(iii) The committed effective dose equivalent assigned to the intake of radionuclides;

(iv) The specific information used to calculate the committed effective dose equivalent pursuant to (5)(d)3. of this Rule;

(v) The total effective dose equivalent when required by (5)(b) of this Rule; and

(vi) The total of the deep dose equivalent and the committed dose to the organ receiving the highest total dose.

2. Record-keeping Frequency. The licensee shall make entries of the records specified in (14)(g)1. of this Rule at intervals not to exceed one year.

3. Record-keeping Format. The licensee shall maintain the records specified in (14)(g)1. of this Rule on Department Form "Occupational Radiation Exposure History" in accordance with the

instructions or in clear and legible records containing all the information required by the Department Form.

4. The licensee shall maintain the records of dose to an embryo/fetus with the records of dose to the declared pregnant woman. The declaration of pregnancy, including the estimated date of conception, shall also be kept on file, but may be maintained separately from the dose records.

5. The licensee shall retain each required form or record until the Department terminates each pertinent license requiring the record.

6. Upon termination of the license, the licensee shall permanently store records on Department Form "Occupational Radiation Exposure History" or equivalent or shall make provisions with the Department for their transfer to the Department.

7. Privacy Protection. The records required pursuant to (14)(g) should be protected from public disclosure because of their personal privacy nature.

(h) Records of Dose to Individual Members of the Public.

1. Each licensee shall maintain records sufficient to demonstrate compliance with the dose limit for individual members of the public. See (5)(i) of this Rule.

2. The licensee shall retain the records required by (14)(h)1. of this Rule until the Department terminates each pertinent license requiring the record.

(i) Records of Waste Disposal.

1. Each licensee shall maintain records of the disposal of licensed materials made pursuant to (13)(b), (13)(c), (13)(d), (13)(e), and (13)(k) of this Rule and of disposal of licensed materials by burial in soil, including burials authorized before July 12, 1982.[6]

2. The licensee shall retain the records required by (14)(i) of this Rule until the Department terminates each pertinent license requiring the record.

(j) Records of Testing Entry Control Devices for Very High Radiation Areas.

1. Each licensee shall maintain records of tests made on entry control devices for very high radiation areas. These records must include the date, time, and results of each such test of function.

2. The licensee shall retain the records required by (14)(j)1. of this Rule for three years after the record is made.

(k) Form of Records. Each record required by this Rule shall be legible throughout the specified retention period. The record shall be the original or a reproduced copy or a microform, provided that the copy or microform is authenticated by authorized personnel and that the microform is capable of producing a clear copy throughout the required retention period; or the

[6] A previous Rule, .03(5)(d), permitted burial of small quantities of licensed materials in soil before July 12, 1982, without specific Department authorization.

record may also be stored in electronic media with the capability for producing legible, accurate, and complete records during the required retention period. Records, such as letters, drawings, and specifications, shall include all pertinent information, such as stamps, initials, and signatures. The licensee shall maintain adequate safeguards against tampering with and loss of records.

(15) **Reports**

(a) Reports of Stolen, Lost, or Missing Licensed Sources of Radiation.

1. Telephone. Each licensee shall report to the Department by telephone as follows:

(i) Immediately after its occurrence becomes known to the licensee, stolen, lost, or missing licensed radioactive material in an aggregate quantity equal to or greater than 1,000 times the quantity specified in Appendix C of 10 CFR 20, under such circumstances that it appears to the licensee that an exposure could result to individuals in unrestricted areas; or

(ii) Within 30 days after its occurrence becomes known to the licensee, lost, stolen or missing licensed radioactive material in an aggregate quantity greater than ten times the quantity specified in Appendix C of 10 CFR 20 that is still missing.

2. Written. Each licensee who is required to make a report pursuant to (15)(a)1. of this Rule shall, within 30 days after making the telephone report, make a written report to the Department setting forth the following information:

(i) A description of the licensed source of radiation involved, including, for radioactive material, the kind, quantity, and chemical and physical form;

(ii) A description of the circumstances under which the loss or theft occurred;

(iii) A statement of disposition, or probable disposition, of the licensed material or source of radiation involved;

(iv) Exposures of individuals to radiation, the circumstances under which the exposures occurred, and the possible total effective dose equivalent to persons in unrestricted areas;

(v) Actions that have been taken, or will be taken, to recover the source of radiation; and

(vi) Procedures or measures that have been, or will be, adopted to ensure against a recurrence of the loss or theft of licensed sources of radiation.

3. Subsequent to filing the written report, the licensee shall also report additional substantive information on the loss or theft within 30 days after the licensee learns of such information.

4. The licensee shall prepare any report filed with the Department pursuant to (15)(a) of this Rule so that names of individuals who may have received exposure to radiation are stated in a separate and detachable portion of the report.

(b) Notification of Incidents.

1. Immediate notification. Each licensee shall:

(i) Notify the Department as soon as possible but not later than four hours after the discovery of an event that prevents immediate protective actions necessary to avoid exposures to radiation or radioactive materials that could exceed regulatory limits or releases of licensed material that could exceed regulatory limits (events may include fires, explosions, toxic gas releases, etc.).

(ii) Notwithstanding any other requirements for notification, immediately report, to the Department, any event involving radioactive material or sources of radiation possessed by the licensee that may have caused or threatens to cause any of the following conditions:

(I) An individual to receive:

I. A total effective dose equivalent of 25 rem (0.25 Sv) or more; or

II. An lens dose equivalent of 75 rem (0.75 Sv) or more; or

III. A shallow-dose equivalent to the skin or extremities of 250 rad (2.5 Gy) or more; or

(II) The release of radioactive material, inside or outside a restricted area, so that had an individual been present for 24 hours, the individual could have received an intake five times the annual limit on intake (the provisions of this paragraph do not apply to locations where personnel are not normally stationed during routine operations, such as hot cells or process enclosures).

2. Twenty-four hour report. Each licensee shall notify the Department within 24 hours after the discovery of any of the following events involving licensed material:

(i) An unplanned contamination event that:

(I) Requires access to the contaminated area, by workers or the public, to be restricted for more than 24 hours by imposing additional radiological controls or by prohibiting entry into the area;

(II) Involves a quantity of material greater than five times the lowest annual limit on intake specified in Appendix B of 10 CFR Part 20 for the material; and

(III) Has access to the area restricted for a reason other than to allow isotopes with a half-life of less than 24 hours to decay prior to decontamination.

(ii) An event in which equipment is disabled or fails to function as designed when:

(I) The equipment is required by regulation or license condition to prevent releases exceeding regulatory limits, to prevent exposures to radiation and radioactive materials exceeding regulatory limits, or to mitigate the consequences of an accident;

(II) The equipment is required to be available and operable when it is disabled or fails to function; and

(III) No redundant equipment is available and operable to perform the required safety function.

(iii) An event that requires unplanned medical treatment at a medical facility of an individual with spreadable radioactive contamination on the individual's clothing or body;

(iv) An unplanned fire or explosion damaging any licensed material or any device, container, or equipment containing licensed material when:

(I) The quantity of material involved is greater than five times the lowest annual limit on intake specified in Appendix B of 10 CFR Part 20 for the material; and

(II) The damage affects the integrity of the licensed material or its container.

(v) Notwithstanding any other requirements for notification, within 24 hours report, to the Department any event involving radioactive material or sources of radiation possessed by the licensee that may have caused or threatens to cause any of the following conditions:

(I) An individual to receive, in a period of 24 hours:

a. A total effective dose equivalent exceeding 5 rems (0.05 Sv); or

b. A lens dose equivalent exceeding 15 rems (0.15 Sv); or

c. A shallow-dose equivalent to the skin or extremities exceeding 50 rems (0.5 Sv); or

(II) The release of radioactive material, inside or outside of a restricted area, so that, had an individual been present for 24 hours, the individual could have received an intake in excess of one occupational annual limit on intake (the provisions of this paragraph do not apply to locations where personnel are not normally stationed during routine operations, such as hot-cells or process enclosures).

3. Preparation and submission of reports. Reports made by licensees in response to the requirements of this section must be made as follows:

(i) Licensees shall make reports required by (15)(b)(1.) and (2.) by telephone to the Department. To the extent that the information is available at the time of notification, the information provided in these must include:

(I) The caller's name, position title, and call back telephone number;

(II) Date, time, and the exact location of the event;

(II) Description of the event, including:

(a) Radiological or chemical hazards involved, including isotopes, quantities, and chemical and physical form of any material released;

(b) Actual or potential health and safety consequences to the workers, the public, and the environment, including relevant chemical and radiation data for actual personnel exposures to radiation or radioactive materials or hazardous chemicals produced from licensed materials (e.g., level of radiation exposure, concentration of chemicals, and duration of exposure);

(c) The sequence of occurrences leading to the event, including degradation or failure of structures, systems, equipment, components, and activities of personnel relied on to prevent potential accidents or mitigate their consequences; and

(d) Whether the remaining structures, systems, equipment, components, and activities of personnel relied on to prevent potential accidents or mitigate their consequences are available and reliable to perform their function;

(IV) External conditions affecting the event;

(V) Additional actions taken by the licensee in response to the event;

(VI) Status of the event (e.g., whether the event is on-going or was terminated);

(VII) Current and planned site status, including any declared emergency class;

(VIII) Notifications, related to the event, that were made or are planned to any local, State, or other Federal agencies;

(IX) Status of any press releases, related to the event, that were made or are planned.

(ii) Written report. Each licensee who makes a report required by (15)(b)(1) and (2) shall submit a written follow-up report within 30 days of the initial report. Written reports prepared pursuant to other regulations may be submitted to fulfill this requirement if the reports contain all of the necessary information and the appropriate distribution is made. These written reports must be sent to the Radioactive Materials Program, 4244 International Parkway, Suite 120, Atlanta, Georgia 30354 or current mailing address. The written report must include the following:

(I) Complete applicable information required by (b)(3)(i);

(II) A description of the event, including the probable cause, all factors that contributed to the event, and the manufacturer and model number (if applicable) of any equipment that failed or malfunctioned; and

(III) Corrective actions taken or planned to prevent occurrence of similar or identical events in the future and the results of any evaluations or assessments.

4. The licensee shall prepare each report filed with the Department pursuant to (15)(b) of this Rule so that names of individuals who have received exposure to sources of radiation are stated in a separate and detachable portion of the report.

5. Licensees shall make the required by (15)(b)1. and 2. of this Rule by telephone to the Department, and shall confirm the initial contact by telegram, mailgram, or facsimile to the Department.

6. The provisions of (15)(b) of this Rule do not apply to doses that result from planned special exposures, provided such doses are within the limits for planned special exposures and are reported pursuant to (15)(d) of this Rule.

(c) Reports of Exposures, Radiation Levels, and Concentrations of Radioactive Material Exceeding the Limits.

1. Reportable Events. In addition to the notification required by (15)(b) of this Rule, each licensee shall submit a written report to the Department within 30 days after learning of any of the following occurrences:

(i) Incidents for which notification is required by (15)(b) of this Rule;

(ii) Doses in excess of any of the following:

(I) The occupational dose limits for adults in (5)(a) of this Rule;

(II) The occupational dose limits for a minor in (5)(g) of this Rule;

(III) The limits for an embryo/fetus of a declared pregnant woman in (5)(h) of this Rule;

(IV) The limits for an individual member of the public in (5)(i) of this Rule;

(V) Any applicable limit in the license; or

(VI) The ALARA constraints for air emissions established under .03(4)(d).

(iii) Levels of radiation or concentrations of radioactive material in:

(I) A restricted area in excess of applicable limits in the license; or

(II) An unrestricted area in excess of ten times the applicable limit set forth in this Rule or in the license, whether or not the exposure of any individual in excess of the limits in (5)(i) of this Rule is involved; or

(iv) For licensees subject to the provisions of U.S. Environmental Protection Agency's generally applicable environmental radiation standards in 40 CFR 190, levels of radiation or releases of radioactive material in excess of those standards, or of license conditions related to those standards[7].

2. Contents of Reports.

(i) Each report required by (15)(c)1. of this Rule shall describe the extent of exposure of individuals to radiation and radioactive material, including, as appropriate:

(I) Estimates of each individual's dose;

(II) The levels of radiation and concentrations of radioactive material involved;

(III) The cause of the elevated exposures, dose rates, or concentrations; and

(IV) Corrective steps taken or planned to ensure against a recurrence, including the schedule for achieving conformance with applicable limits, ALARA constraints, generally applicable environmental standards, and associated license conditions.

---

[7] For purposes of these Regulations, the U.S. Environmental Protection Agency Standards apply only to source material mills and nuclear power plants.

(ii) Each report filed pursuant to (14)(c)1. of this Rule shall include for each occupationally exposed individual: the name, Social Security account number, and date of birth. With respect to the limit for the embryo/fetus in (5)(h) of this Rule, the identification should be that of the declared pregnant woman. The report shall be prepared so that this information is stated in a separate and detachable portion of the report.

3. All licensees who make pursuant to (15)(c)1. of this Rule shall submit the report in writing to the Department.

(d) Reports of Planned Special Exposures. The licensee shall submit a written report to the Department within 30 days following any planned special exposure conducted in accordance with (5)(f) of this Rule, informing the Department that a planned special exposure was conducted and indicating the date that the planned special exposure occurred and the information required by (14)(g) of this Rule.

(e) Reports to Individuals of Exceeding Dose Limits. When a licensee is required, pursuant to the provisions of (15)(c), (15)(d), or (15)(f), to report to the Department any exposure of an identified occupationally exposed individual, or an identified member of the public to radiation or radioactive material, the licensee shall also provide a copy of the report submitted to the Department to the individual. This report must be transmitted at a time no later than the transmittal to the Department.

(f) Notifications and Reports to Individuals.

1. Requirements for notification and to individuals of exposure to radiation or radioactive material are specified in Rule 391-3-17-.07(4).

2. When a licensee is required pursuant to (15)(c) of this Rule to report to the Department any exposure of an identified occupationally exposed individual or identified member of the public to radiation or radioactive material, the licensee shall also provide the individual a report on his or her exposure data included in the report to the Department. his report shall be transmitted at a time not later than the transmittal to the Department, and shall comply with the provisions of Rule 391-3-17-.07(4)(a).

(g) Reports of Leaking or Contaminated Sealed Sources. If the test for leakage or contamination required pursuant to Rule .03(6) indicates that the sealed source is leaking or contaminated, a report of the test shall be filed within five days with the Department describing the equipment involved, the test results, and the corrective action taken.

(h) [Reserve]

(i) Serialization of Nationally Tracked Sources.

1. Each licensee who manufactures a nationally tracked source after February 6, 2007 shall assign a unique serial number to each nationally tracked source. Serial numbers must be composed only of alpha-numeric characters.

(j) Reports of Transactions Involving Nationally Tracked Sources.

1. Each licensee who manufactures, transfers, receives, disassembles, or disposes of a nationally-tracked source shall complete and submit a National Source Tracking Transaction Report as specified below for each type of transaction.

2. Each licensee who manufactures a nationally tracked source shall complete and submit a National Source Tracking Transaction Report. The report must include the following information:

(i) The name, address, and license number of the reporting licensee;

(ii) The name of the individual preparing the report;

(iii) The manufacturer, model, and serial number of the source;

(iv) The radioactive material in the source;

(v) The initial source strength in becquerels (curies) at the time of manufacture; and

(vi) The manufacture date of the source.

3. Each licensee that transfers a nationally tracked source to another person shall complete and submit a National Source Tracking Transaction Report. The report must include the following information:

(i) The name, address, and license number of the reporting licensee;

(ii) The name of the individual preparing the report;

(iii) The name and license number of the recipient facility and shipping address;

(iv) The manufacturer, model, and serial number of the source or, if not available, other information to uniquely identify the source;

(v) The radioactive material in the source;

(vi) The initial or current source strength in becquerels (curies);

(vii) The date for which the source strength is reported;

(viii) The shipping date;

(ix) The estimated arrival date; and

(x) For nationally tracked sources transferred as waste under a Uniform Low-Level Radioactive Waste Manifest, the waste manifest number and the container identification of the container with the nationally tracked source.

4. Each licensee that receives a nationally tracked source shall complete and submit a National Source Tracking Transaction Report. The report must include the following information:

(i) The name, address, and license number of the reporting licensee;

(ii) The name of the individual preparing the report;

(iii) The name, address and license number of the person that provided the source;

(iv) The manufacturer, model, and serial number of the source or, if not available, other information to uniquely identify the source;

(v) The radioactive material in the source;

(vi) The initial or current source strength in becquerels (curies);

(vii) The date for which the source strength is reported;

(viii) The date of receipt; and

(ix) For material received under a Uniform Low-Level Radioactive Waste Manifest, the waste manifest number and the container identification with the nationally tracked source.

5. Each licensee that disassembles a nationally tracked source shall complete and submit a National Source Tracking Transaction Report. The report must include the following information:

(i) The name, address, and license number of the reporting licensee;

(ii) The name of the individual preparing the report;

(iii) The manufacturer, model, and serial number of the source or, if not available, other information to uniquely identify the source;

(iv) The radioactive material in the source;

(v) The initial or current source strength in becquerels (curies);

(vi) The date for which the source strength is reported; and

(vii) The disassemble date of the source.

6. Each licensee who disposes a nationally tracked source shall complete and submit a National Source Tracking Transaction Report. The report must include the following information:

(i) The name, address, and license number of the reporting licensee;

(ii) The name of the individual preparing the report;

(iii) The waste manifest number;

(iv) The container identification with the nationally tracked source;

(v) The date of disposal; and

(vi) The method of disposal.

7. The reports discussed in (15)(j)2.-6. above must be submitted by the close of the next business day after the transaction. A single report may be submitted for multiple sources and transactions. The reports must be submitted to the National Source Tracking System by using:

(i) The on-line National Source Tracking System;

(ii) Electronically using a computer-readable format;

(iii) By facsimile;

(iv) By mail to the address on the National Sources Tracking Transaction Report Form (NRC Form 748); or

(v) By telephone with follow-up by facsimile or mail.

8. Each licensee shall correct any error in previously filed reports or file a new report for any missed transaction within five (5) business days of the discovery of the error or missed transaction. Such errors may be detected by a variety of methods such as administrative reviews or by physical inventories required by regulation. In addition, each licensee shall reconcile the inventory of nationally tracked sources possessed by the licensee against that licensee's data in the National Source Tracking System. The reconciliation must be conducted during the month of January in each year. The reconciliation process must include resolving any discrepancies between the National Source Tracking System and the actual inventory by filing the reports identified in (15)(j)2-6 of this section. By January 31 of each year, each licensee must submit to the National Source Tracking System confirmation that the data in the National Source Tracking System is correct.

9. Each licensee that possesses Category 1 nationally tracked sources shall report its initial inventory of Category 1 nationally tracked sources to the National Source Tracking System by January 31, 2009. Each licensee that possesses Category 2 nationally tracked sources shall report its initial inventory of Category 2 nationally tracked sources to the National Source Tracking System by January 31, 2009. Nationally Tracked Source Thresholds are presented in Table 3 of 391-3-17-.03(15). The information may be submitted by using any of the methods identified in (15)(j)7. The initial inventory report must include the following information:

(i) The name, address, and license number of the reporting licensee;

(ii) The name of the individual preparing the report;

(iii) The manufacturer, model, and serial number of each nationally tracked source or, if not available, other information to uniquely identify the source;

(iv) The radioactive material in the source;

(v) The initial or current source strength in becquerels (curies); and

(vi) The date for which the source strength is reported.

Table 3: Nationally Tracked Source Thresholds

Radioactive Material	**Category 1 (TBq)**	**Category 1 (Ci)**	**Category 2 (TBq)**	**Category 2 (Ci)**
Actinium-227	20	540	0.2	5.4
Americium-241	60	1,600	0.6	16
Americium-241/Beryllium	60	1,600	0.6	16
Californium-252	20	540	0.2	5.4
Cobalt-60	30	810	0.3	8.1
Curium-244	50	1,400	0.5	14
Cesium-137	100	2,700	1	27
Gadolinium-153	1,000	27,000	10	270
Iridium-192	80	2,200	0.8	22
Plutonium-238	60	1,600	0.6	16
Plutonium-238/Beryllium	60	1,600	0.6	16
Polonium-210	60	1,600	0.6	16
Promethium-147	40,000	1,100,000	400	11,000
Radium-226	40	1,100	0.4	11
Selenium-75	200	5,400	2	54
Strontium-90	1,000	27,000	10	270
Thorium-228	20	540	0.2	5.4
Thorium-229	20	540	0.2	5.4
Thulium-170	20,000	540,000	200	5,400
Ytterbium-169	300	8,100	3	81

The Terabecquerel (TBq) values are the regulatory standard. The Curie (Ci) values specified are obtained by converting from the TBq value. The Curie values are provided for practical usefulness only and are rounded after conversion.

(16) **Exemptions and Additional Requirements**

(a) Vacating Premises. Each specific licensee shall, no less than 30 days before vacating or relinquishing possession or control of premises which may have been contaminated with radioactive material as a result of his activities, notify the Department in writing of his intent to vacate. When deemed necessary by the Department, the licensee shall decontaminate the premises in such a manner as the Department may specify.

(b) Orders. The Department may, by order, impose upon any licensee such requirements, issued in furtherance of this rule, as it deems appropriate or necessary to protect health or minimize danger to life or property.

Authority: O.C.G.A. §§ 31-13-1 et seq. **History.** Original Rule entitled "Standards for Protection Against Radiation" adopted. F. May 2, 1991; eff. May 22, 1991. **Amended:** ER. 391-3-17-0.28-.03 adopted. F. Dec. 9, 1993, eff. Dec. 8, 1993, the date of adoption. **Amended:** Feb. 24, 1994; eff. Mar. 16, 1994. **Amended:** F. Oct. 4, 1994; eff. Oct. 24, 1994. **Amended:** F. Apr. 16, 1997; eff. May 6, 1997. **Amended:** F. Mar. 29, 2002; eff. Apr. 18, 2002. **Amended:** F. May 30, 2003; eff. July 1, 2003, as specified by the Agency. **Amended:** F. Oct. 17, 2008; eff. Nov. 6, 2008. **Amended:** F. Jan. 8, 2014; eff. Jan. 28, 2014.

391-3-17-.04 Special Radiation Safety Requirements for Industrial Radiographic Operations. Amended.

(1) **Purpose.**

The provisions of this Rule establish radiation safety requirements and certification procedures for persons utilizing radioactive materials for industrial radiography. Each licensee and certificate holder is responsible for ensuring compliance with these Rules, his license conditions, and Orders of the Department. Each licensee and certificate holder is also responsible for ensuring that persons performing activities under a license comply with the Rules, license conditions, and Orders of the Department.

(2) **Scope.**

(a) The provisions of this Rule are in addition to and not a substitution for the other requirements of this Chapter. The provisions of this Rule apply to all licensees who use radioactive materials for industrial radiography; provided, however, that nothing in this Rule shall apply to the use of radioactive materials in the healing arts.

(b) The licensee shall inform the Department within three days of work to be performed at temporary job sites within the State of Georgia. If the licensee was not given three days notice for a particular job site the licensee shall provide notification to the Department prior to starting work at the site. The following information is required in the notification: the location of the job site; the employing company; a point of contact for the employing company; the dates of the job; and the starting and ending times on the job site.

(3) **Definitions.** The definitions set forth for certain terms in Rule 391-3-17-.01 are applicable to those terms as used in this Rule. The following additional definitions also apply:

(a) "Annual refresher safety training" means a review conducted or provided by the licensee for its employees on radiation safety aspects of industrial radiography. The review shall include, as a minimum, any results of internal inspections, new procedures or equipment, new or revised regulations, and accidents or errors that have been observed. The review shall also provide opportunities for employees to ask safety questions.

(b) "ANSI" means American National Standards Institute.

(c) "Associated equipment" means equipment that is used in conjunction with a radiographic exposure device to make radiographic exposures that drives, guides, or comes in contact with the source. (e.g., guide tube, control tube, control (drive) cable, removable source stop, "J" tube and collimator when used as an exposure head.)

(d) "Cabinet radiography" means industrial radiography conducted in an enclosure or cabinet so shielded that radiation levels at every location on the exterior meet the conditions specified in Rule 391-3-17-.03(5)(i).

(e) "Certifying entity" means an independent certifying organization meeting the requirements in Appendix A of this Rule or an Agreement State or Licensing State regulatory program meeting the requirements in Appendix A, Parts II and III of this Rule.

(f) "Collimator" means a device used to limit the size, shape, and direction of the primary beam of radiation.

(g) "Control cable" means the cable that is connected to the source assembly and used to drive the source to and from the exposure location.

(h) "Control drive mechanism" means a device that enables the source assembly to be moved into and out of the exposure device.

(i) "Control tube" means a protective sheath for guiding the control cable. The control tube connects the control drive mechanism to the radiographic exposure device.

(j) "Enclosed radiography" means industrial radiography conducted in an enclosed cabinet or room and includes cabinet radiography and shielded room radiography.

(k) "Exposure head" means a device that locates the gamma radiography sealed source in the selected working position. An exposure head is also known as a source stop.

(l) "Field station" means a facility from which sources of radiation may be stored or used and from which equipment is dispatched.

(m) "Guide tube" means a flexible or rigid tube, or "J" tube, for guiding the source assembly and the attached control cable from the exposure device to the exposure head. The guide tube may also include the connections necessary for attachment to the exposure device and to the exposure head.

(n) "Hands-on experience" means experience in all of those areas considered to be directly involved in the radiography process.

(o) "Independent certifying organization" means an independent organization that meets all of the criteria of Appendix A of this Rule.

(p) "Industrial radiography" means the examination of the macroscopic structure of materials by nondestructive methods using sources of ionizing radiation to produce radiographic images.

(q) "Lay-barge radiography" means industrial radiography performed on any water vessel used for laying pipe.

(r) "Offshore platform radiography" means industrial radiography conducted from a platform over a body of water.

(s) "Permanent radiographic installation" means a shielded installation or structure designed or intended for radiography and in which radiography is regularly performed.

(t) "Personal supervision" means guidance and instruction provided to a radiographer's assistant by a radiographer who is present at the site, in visual contact with the radiographer's assistant while the radiographer's assistant is using radioactive material, and in such proximity that immediate assistance can be given if required.

(u) "Pigtail" see "Source assembly".

(v) "Pill" see "Sealed source".

(w) "Practical examination" means a demonstration through application of the safety rules and principles in industrial radiography including use of all procedures and equipment to be used by radiographic personnel.

(x) "Radiation Safety Officer" means an individual named by the licensee who has a knowledge of, responsibility for, and authority to impose appropriate radiation protection rules, standards, and practices on behalf of the licensee and who meets the requirements of (15)of this Rule.

(y) "Radiographer" means any individual who performs or who, in attendance at the site where radioactive materials are being used, personally supervises industrial radiographic operations and who is responsible to the licensee for assuring compliance with the requirements of this Chapter and all license conditions.

(z) "Radiographer certification" means written approval received from a certifying entity stating that an individual has satisfactorily met the radiation safety, testing, and experience criteria in (16) of this rule.

(aa) "Radiographer's assistant" means any individual who under the direct supervision of a radiographer, uses radiographic exposure devices, radioactive materials, related handling tools, or radiation survey instruments in industrial radiography.

(bb) "Radiographic exposure device" means any instrument containing a sealed source fastened or contained therein, in which the sealed source or shielding thereof may be moved, or otherwise changed, from a shielded to an unshielded position for purposes of making a radiographic exposure (e.g. camera).

(cc) "Radiographic operations" means all activities performed with a radiographic exposure device. Activities include using, transporting except by common or contract carriers, or storing at a temporary job site, performing surveys to confirm the adequacy of boundaries, setting up equipment, and any activity inside restricted area boundaries.

(dd) "Residential location" means any area where structures in which people live or lodge are located, and the grounds on which such structures are located including, but not limited to, houses, apartments, condominiums, and garages.

(ee) "S-tube" means a tube through which the radioactive source travels when inside a radiographic exposure device.

(ff) "Sealed source" means any radioactive material that is encased in a capsule designed to prevent leakage or escape of the radioactive material.

(gg) "Shielded position" means the location within the radiographic exposure device or storage container which, by manufacturer's design, is the proper location for storage of the sealed source.

(hh) "Shielded-room radiography" means industrial radiography conducted in a room shielded so that radiation levels at every location on the exterior meet the limitations specified in Rule 391-3-17-.03(5)(i) of this Chapter.

(ii) "Source assembly" means an assembly that consists of the sealed source and a connector that attaches the source to the control cable. The source assembly may include a ball stop to secure the source in the shielded position.

(jj) "Source changer" means a device designed and used for replacement of sealed sources in radiographic exposure devices, including those source changers also used for transporting and storage of sealed sources.

(kk) "Storage area" means any location, facility, or vehicle which is used to store, to transport, or to secure a radiographic exposure device, a storage container, or a sealed source when it is not in use and which is locked or has a physical barrier to prevent accidental exposure, tampering with, or unauthorized removal of the device, container, or source.

(ll) "Storage container" means a shielded device in which sealed sources are secured and stored.

(mm) "Temporary job site" means any location where radiographic operations are performed and where sources of radiation may be stored other than the location(s) listed specifically on the license.

(nn) "Transport container" means a package that is designed to provide radiation safety and security when sealed sources are transported and meets all applicable requirements of the U.S. Department of Transportation.

(oo) "Underwater radiography" means radiographic operations performed when the radiographic exposure device or radiation machine and/or related equipment are beneath the surface of the water.

(4) **Licensing Requirements for Industrial Radiography Operations.** The Department will approve an application for a specific license for the use of licensed material if the applicant meets the following requirements:

(a) The applicant satisfies the general requirements specified in Rule 391-3-17-.02(8), as applicable, and any special requirements contained in this Rule;

(b) The applicant submits an adequate program for training radiographers and radiographer's assistants that meets the requirements of .04(16):

1. After April 18, 2004, the applicant need not describe the initial training and examination program for radiographers in the subjects outlined in .04(16)(g).

2. The applicant may affirm that all individuals acting as industrial radiographers will be certified in radiation safety by a certifying entity before commencing duty as radiographers. This affirmation substitutes for a description of its initial training and examination program for radiographers in the subjects outlined in .04(16)(g).

(c) The applicant submits procedures for verifying and documenting the certification status of radiographers and for ensuring that the certification of individuals acting as radiographers remains valid;

(d) The applicant submits written operating and emergency procedures as described in

.04(17);

(e) The applicant submits a description of a program for inspections of the job performance of each radiographer and radiographer's assistant at intervals not to exceed six months as described in .04(16)(e);

(f) The applicant submits a description of the applicant's overall organizational structure as it applies to the radiation safety responsibilities in industrial radiography, including specified delegation of authority and responsibility;

(g) The applicant submits the qualifications of the individual(s) designated as the radiation safety officer as described in .04(15)(a);

(h) If an applicant intends to perform leak testing of sealed sources or exposure devices containing depleted uranium (DU) shielding, the applicant must describe the procedures for performing the test. The description must include the:

1. Methods of collecting the samples;

2. Instruments to be used;

3. Methods of analyzing the samples; and

4. Qualifications of the individual who analyzes the samples.

(i) If the applicant intends to perform calibrations of survey instruments and alarming ratemeters, the applicant must describe methods to be used and the experience of the person(s) who will perform the calibrations. All calibrations must be performed according to the procedures described and at the intervals prescribed in .04(8)(b) and .04(19)(g)4.;

(j) The applicant identifies and describes the location(s) of all field stations and permanent radiographic installations;

(k) The applicant identifies the location(s) where all records required by this and other Rules in this Chapter will be maintained;

(l) If a license application includes underwater radiography the applicant must submit a description of:

1. Radiation safety procedures and radiographer responsibilities unique to the performance of underwater radiography;

2. Radiographic equipment and radiation safety equipment unique to underwater radiography; and

3. Methods for gas-tight encapsulation of equipment; and

(m) If an application includes offshore platform and/or lay-barge radiography the applicant must submit a description of:

1. Transport procedures for radioactive material to be used in industrial radiographic

operations;

2. Storage facilities for radioactive material; and

3. Methods for restricting access to radiation areas.

(5) **Performance Requirements for Radiography Equipment.** Equipment used in industrial radiographic operations must meet the following minimum criteria:

(a) Each radiographic exposure device, source assembly or sealed source and all associated equipment must meet the requirements specified in American National Standards Institute (ANSI) N432-1980 "Radiological Safety for the Design and Construction of Apparatus for Gamma Radiography," (published as NBS Handbook 136, issued January 1981). (This publication may be purchased from the Superintendent of Documents, U.S. Government Printing Office, Washington, D.C., 20402 and from the American National Standards Institute, Inc., 25 West 43rd Street, New York, New York 10036, Telephone (212) 642-4900. Copies of the document are available for inspection at the Department of Natural Resources, Radioactive Materials Program, 4244 International Parkway, Suite 120, Atlanta, Georgia 30354 or current address.)

(b) In addition to the requirements specified in (5)(a) of this Rule, the following requirements apply to radiographic exposure devices, source changers, source assemblies or sealed sources:

1. Each radiographic exposure device must have attached to it by the user, a durable, legible, clearly visible label bearing the:

(i) Chemical symbol and mass number of the radionuclide in the device;

(ii) Activity and the date on which this activity was last measured;

(iii) Model number (or product code) and serial number of the sealed source;

(iv) Manufacturer of the sealed source; and

(v) Licensee's name, address, and telephone number.

2. Radiographic exposure devices intended for use as Type B transport containers must meet the applicable requirements of 10 CFR Part 71.

3. Modification of any radiographic exposure devices, source changers, source assemblies and associated equipment is prohibited, unless the design of any replacement component, including source holder, source assembly, controls or guide tubes would not compromise the design safety features of the system.

(c) In addition to the requirements specified in .04(5)(a) and (5)(b) the following requirements apply to radiographic exposure devices, source assemblies and associated equipment that allow the source to be moved out of the device for routine operation or to source changers:

1. The coupling between the source assembly and the control cable must be designed in such a manner that the source assembly will not become disconnected if cranked outside the

guide tube. The coupling must be such that it cannot be unintentionally disconnected under normal and reasonably foreseeable abnormal conditions.

2. The device must automatically secure the source assembly when it is cranked back into the fully shielded position within the device. This securing system may only be released by means of a deliberate operation on the exposure device.

3. The outlet fittings, lock box, and drive cable fittings on each radiographic exposure device must be equipped with safety plugs or covers which must be installed during storage and transportation to protect the source assembly from water, mud, sand or other foreign matter.

4. Each sealed source or source assembly must have attached to it or engraved in it, a durable, legible, visible label with the words: "DANGER - RADIOACTIVE." The label must not interfere with the safe operation of the exposure device or associated equipment.

5. The guide tube must be able to withstand a crushing test that closely approximates the crushing forces that are likely to be encountered during use, and be able to withstand a kinking resistance test that closely approximates the kinking forces likely to be encountered during use.

6. Guide tubes must be used when moving the source out of the device.

7. An exposure head or similar device designed to prevent the source assembly from passing out of the end of the guide tube must be attached to the outermost end of the guide tube during radiographic operations.

8. The guide tube exposure head connection must be able to withstand the tensile test for control units specified in ANSI N432-1980.

9. Source changers must provide a system for ensuring that the source will not be accidentally withdrawn from the changer when connecting or disconnecting the drive cable to or from a source assembly.

(d) All radiographic exposure devices and associated equipment in use after January 10, 1996 must comply with the requirements of .04(5).

(e) Notwithstanding (5)(a) equipment used in industrial radiographic operations need not comply with section 8.9.2(c) of the Endurance Test in ANSI N432-1980 if the prototype equipment has been tested using a torque value representative of the torque that an individual using the radiography equipment can realistically exert on the lever or crankshaft of the drive mechanism.

(6) **Equipment Control. Limits on External Radiation Levels From Storage Containers and Source Changers.** The maximum exposure rate limits for storage containers and source changers are 2 millisieverts (200 mrem) per hour at any exterior surface, and 0.1 millisieverts (10 mrem) per hour at one meter from any exterior surface with the sealed source in the shielded position.

(7) **Locking and Storage of Radiographic Devices, Storage Containers, and Source Changers.**

(a) Each radiographic exposure device shall be provided with a lock or outer locked container designed to prevent unauthorized or accidental removal of a sealed source from its shielded

position. The exposure device and/or its container shall be kept locked[1] at all times except when not under the direct surveillance of a radiographer or a radiographer's assistant except at a permanent radiographic installations as stated in .04(21).

(b) Each sealed source storage container and source changer shall be provided with a lock or outer locked container designed to prevent unauthorized or accidental removal of the sealed source from its shielded position. Storage containers and source changers must be and kept locked when containing sealed sources except when the container is under the direct surveillance of a radiographer of radiographer's assistant.

(c) Radiographic exposure devices, source changers, and storage containers, prior to being moved from one location to another and also prior to being secured at a given location, shall be locked and surveyed to assure that the sealed source is in the shielded position.

(d) During radiographic operations the sealed source shall be secured in its shielded position by locking the exposure device or securing the remote control each time the sealed source is returned to its shielded position. A survey shall be performed to determine that the sealed source is in the shielded position.

(e) Storage Precautions.

1. Locked radiographic exposure devices and storage containers shall be physically secured to prevent tampering or removal by unauthorized personnel.

2. Radiographic exposure devices, source changers, or transport containers that contain radioactive material may not be stored in residential locations. This Rule does not apply to storage of radioactive material in a vehicle in transit for use at temporary job sites, if the licensee complies with (7)(e)3. of this Rule and if the vehicle does not constitute a permanent storage location as described in (7)(e)4. of this Rule.

3. If a vehicle is to be used for storage of radioactive material, a vehicle survey shall be performed after securing the radioactive material in the vehicle and before transport to ensure that radiation levels do not exceed the limits specified in Rule .03(5)(i) of this Chapter at the exterior surface of the vehicle.

(i) If this vehicle is parked in a residential location a 360° survey of the vehicle must be performed before leaving the vehicle unattended to ensure that radiation levels do not exceed the limits specified in Rule .03(5)(i) of this Chapter.

(ii) An unattended vehicle shall have the name, local address, and local telephone number of the person responsible for the vehicle, posted on it in a conspicuous place on the vehicle.

4. A storage or use location is considered permanent if radioactive material is stored at the location for more than 90 days and any one or more of the following applies to the location:

(i) Telephone service is established by the licensee;

(ii) Industrial radiographic services are advertised for or from the location;

[1] If a keyed lock, the key must be removed at all times.

(iii) Industrial radiographic operations are conducted at other sites due to arrangements made from the location.

(8) **Radiation Survey Instruments.**

(a) The licensee shall maintain sufficient calibrated and operable radiation survey instruments to make physical radiation surveys as required by this Rule and Rule 391-3-17-.03(7)(a)1. and 2. Instrumentation required herein shall have a range such that two milliroentgens per hour through one Roentgen per hour can be measured.

(b) The licensee shall have each radiation survey instrument required under .04(4)(d) calibrated:

1. By a person licensed or certified by the Department, another Agreement State, or the U.S. Nuclear Regulatory Commission to perform such service;

2. At energies appropriate for the licensee's use;

3. At intervals not to exceed six months and after each instrument servicing, except for battery changes;

4. To demonstrate an accuracy within ±20 percent ; and

5. At two points located approximately 1/3 and 2/3 of full-scale on each scale for linear scale instruments; at midrange of each decade, and at two points of at least one decade for logarithmic scale instruments; and at approximate points for digital instruments.

(c) The licensee shall maintained records of the results of the instrument calibrations in accordance with .04(25).

(9) **Leak Testing and Replacement of Sealed Sources.**

(a) The replacement of any sealed source fastened to or contained in a radiographic exposure device and leak testing of any sealed source shall be performed only by persons specially authorized to do so by the Department, the U.S. Nuclear Regulatory Commission, or an Agreement State.

(b) The opening, repair, or modification of any sealed source shall be performed only by persons specially authorized to do so by the Department, the U.S. Nuclear Regulatory Commission, or an Agreement State.

(c) Testing and Record keeping Requirements

1. Each licensee who uses a sealed source shall have the source tested for leakage at intervals not to exceed six months. The leak testing of the source must be performed using a method approved by the Department, the U.S. Nuclear Regulatory Commission, or by another Agreement State. The wipe sample should be taken from the nearest accessible point to the sealed source where contamination might accumulate. The wipe sample must be analyzed for radioactive contamination. The analysis must be capable of detecting the presence of 0.005 microcuries (185 bequerel) of radioactive material on the test sample and must be performed by a person specifically authorized by the Department, the U.S. Nuclear Regulatory Commission, or another Agreement State to perform the analysis.

2. The licensee shall maintain records of the leak test in accordance with .04(26)

3. Unless a sealed source is accompanied by a certificate from a transferor that shows that it has been leak tested within the six months before the transfer, it shall not be used by the licensee until tested for leakage. Sealed sources authorized for storage and not in use do not require leak testing, but must be tested before use or transfer to another person if the interval of storage exceeds six months.

4. Any test conducted pursuant to the requirements of (9)(c)1. and 3. of this Rule which reveals the presence of 0.005 microcuries (185 bequerel) or more of removable radioactive material shall be considered evidence that the sealed source is leaking. The licensee shall immediately withdraw the equipment involved from use and shall cause it to be decontaminated and repaired or to be disposed of in accordance with Department Rules. A report shall be filed, within five (5) days after obtaining results of the test, with the Department, describing the equipment involved, the test results, and the corrective action taken.

5. Each exposure device using depleted uranium (DU) shielding and an "S" tube configuration must be tested for DU contamination at intervals not to exceed 12 months. The analysis must be capable of detecting the presence of 0.005 microcuries (185 becquerel) of radioactive material on the test sample and must be performed by a person specifically authorized by the Department, the U.S. Nuclear Regulatory Commission, or another Agreement State to perform the analysis. Should such testing reveal the presence of DU contamination, the exposure device must be removed from use until an evaluation of the wear of the S-tube has been made. Should the evaluation reveal that the S-tube is worn through, the device may not be used again. DU shielded devices do not have to be tested for DU contamination while not in use and in storage. Before using or transferring such a device, however, the device must be tested for DU contamination, if the interval of storage exceeds 12 months. A record of the DU leak-test must be made in accordance with .04(26).

(10) **Quarterly Inventory.**

(a) Each licensee shall conduct a quarterly physical inventory to account for all sealed sources and devices containing depleted uranium received or possessed under the license.

(b) The licensee shall maintain records of the quarterly inventories in accordance with .04(27)

(11) **Inspection and Maintenance of Radiographic Exposure Devices, Transport and Storage Containers, Associated Equipment, Source Changers, and Survey Instruments.**

(a) The licensee shall perform visual and operability checks on survey meters radiographic exposure devices, transport and storage containers, associated equipment and source changers before each day's use, or work shift, to ensure that:

1. The equipment is in good working condition;

2. The sources are adequately shielded; and

3. Required labeling is present.

(b) Survey instrument operability must be performed using check sources or other appropriate means.

(c) If equipment problems are found, the equipment must be removed from service until repaired.

(d) Each licensee shall have written procedures for and perform inspection and routine maintenance of radiographic exposure devices, source changers, associated equipment, transport and storage containers, and survey instruments at intervals not to exceed three months or before the first use thereafter to ensure the proper functioning of components important to safety. If equipment problems are found, the equipment must be removed from service until repaired.

(e) The licensee's inspection and maintenance program must include procedures to assure that Type B packages are shipped and maintained in accordance with the certificate of compliance or other approval.

(f) Records of equipment problems and of any maintenance performed under .04(11)(c) and (d) shall be maintained in accordance with .04(29).

(12) **Permanent Radiographic Installations.**

(a) Each entrance that is used for personnel access to the high radiation area in a permanent radiographic installation shall have either:

1. An entrance control of the types described in Rule 391-3-17-.03(9)(a)1., or .03(9)(a)2. that causes the radiation level upon entry into the area to be reduced; or

2. Both visible and audible warning signals to warn of the presence of radiation. The visible signal shall be activated by radiation whenever the source is exposed. The audible signal shall be actuated when an attempt is made to enter the installation while the source is exposed.

(b) The alarm system shall be tested for proper operation with a radiation source each day before the installation is used for radiographic operations. The test must include a check of both the visible and audible signals. Entrance control devices that reduce the radiation level upon entry as designated in .04(12)(a) must be tested monthly. If an entrance control device or alarm system is operating improperly, it shall be immediately labeled as defective and repaired within seven calendar days. The facility may continue to be used during this seven day period, provided the licensee implements the continuous surveillance requirements of .04(21) and uses an alarming ratemeter. Test records for entrance controls and audible and visual alarms and records of repairs must be maintained in accordance with .04(30).

(13) **Labeling, Storage, and Transportation.**

(a) The licensee may not use a source changer or a container to store radioactive material unless the source changer or the storage container has securely attached to it a durable, legible, and clearly visible label bearing the standard trefoil radiation caution symbol conventional colors, i.e., magenta, purple or black on a yellow background, having a minimum diameter of 25 mm, and the wording:

CAUTION *

RADIOACTIVE MATERIAL
NOTIFY CIVIL AUTHORITIES [or " NAME OF COMPANY"]

* --- or "DANGER"

(b) The licensee may not transport radioactive material unless the material is packaged, and the package is labeled, marked, and accompanied with appropriate shipping papers in accordance with regulations set out in Rule 391-3-17-.06.

(c) Radiographic exposure devices, source changers, and storage containers, must be physically secured to prevent tampering or removal by unauthorized personnel. The licensee shall store radioactive material in a manner that will minimize danger from explosion or fire.

(d) The licensee shall lock and physically secure the transport package containing radioactive material in the transporting vehicle to prevent accidental loss, tampering, or unauthorized removal.

(e) The licensee's name and city or town where the main business office is located shall be prominently displayed with a durable, clearly visible label(s) on both sides of all vehicles used to transport radioactive material for temporary job site use.

(14) **Conducting Industrial Radiographic Operations.**

(a) Whenever radiography is performed at a location other than a permanent radiographic installation, the radiographer must be accompanied by at least one other qualified radiographer or an individual who has at a minimum met the requirements of .04(16)(c). The additional qualified individual shall observe the operations and be capable of providing immediate assistance to prevent unauthorized entry. Radiography may not be performed if only one qualified individual is present.

(b) All radiographic operations conducted at locations of use authorized on the license must be conducted in a permanent radiographic installation, unless otherwise specifically authorized by the Department.

(c) Except when physically impossible, collimators shall be used in industrial radiographic operations that use radiographic exposure devices that allow the source to be moved out of the device.

(d) A licensee may conduct lay-barge, offshore platform, or underwater radiography only if procedures have been approved by the Department.

(15) **Radiation Safety Officer.** A Radiation Safety Officer (RSO) shall be designated on every industrial radiography license issued by the Department. The Radiation Safety Officer shall ensure that radiation safety activities are being performed in accordance with approved procedures and regulatory requirements in the daily operation of the licensee's program.

(a) The minimum qualifications, training, and experience for radiation safety officers for industrial radiography are as follows:

1. Completion of the training and testing requirements of .04(16);

2. 2,000 hours of hands-on experience as a qualified radiographer in industrial radiographic operations; and

3. Formal training in the establishment and maintenance of a radiation protection program.

(b) The Department will consider alternatives when the radiation safety officer has appropriate training and experience in the field of ionizing radiation, and in addition, has adequate formal training with respect to the establishment and maintenance of a radiation safety protection program.

(c) The specified duties of the RSO include, but are not limited to, the following:

1. Establishing and overseeing all operating, emergency, and ALARA procedures, and to review them regularly to ensure that the procedures are current and conform with these Rules;

2. Overseeing and approving all phases of the training program for radiographic personnel so that appropriate and effective radiation protection practices are taught;

3. Ensuring that required radiation surveys and leak tests are performed and documented in accordance with these Rules, including any corrective measures when levels of radiation exceed established limits;

4. Ensuring that personnel monitoring devices are calibrated and used properly by occupationally-exposed personnel, that records are kept of the monitoring results, and that timely notifications are made as required by this Chapter;

5. Ensuring that any required interlock switches and warning signals are functioning and that radiation signs, ropes, and barriers are properly posted and positioned;

6. Investigating and reporting to the Department each known or suspected case of radiation exposure to an individual, or radiation level detected, in excess of limits established by this Chapter and each theft or loss of source(s) of radiation, to determine the cause and to take steps to prevent its recurrence;

7. Having a thorough knowledge of management policies and administrative procedures of the licensee;

8. Assuming control and having the authority to institute corrective actions including shutdown of operations when necessary in emergency situations or unsafe conditions;

9. Maintaining records as required by this Chapter;

10. Ensuring the proper storing, labeling, transport, and use of exposure devices and sources of radiation;

11. Ensuring that inventory and inspection and maintenance programs are performed in accordance with (10) and (11) of this Rule;

12. Ensuring that personnel are complying with this Chapter, the conditions of the license, and the operating and emergency procedures of the licensee.

(16) **Training.**

(a) The licensee shall not permit any individual to act as a radiographer until such individual has received at least 40 hours of training in the subjects outlined in .04(16)g, in addition to on the job training consisting of hands- on experience under the supervision of a radiographer and is certified through a radiographer certification program by a certifying entity in accordance with the criteria specified in Appendix A of this Rule. The on the job training shall include a minimum of 2 months (320 hours) of active participation in the performance of industrial radiography utilizing radioactive material.

(b) In addition, the licensee may not permit any individual to act as a radiographer until the individual:

1. Has received copies of and instruction in the requirements described in the regulations contained in this Rule, and applicable sections of Rules 391-1-7-.03, .06, and .07, in the license under which the radiographer will perform industrial radiography, and the licensee's operating and emergency procedures;

2. Has demonstrated an understanding of items in .04(16)(b)1. by successful completion of a written or oral examination;

3. Has received training in the use of the licensee's radiographic exposure devices, sealed sources, in the daily inspection of devices and associated equipment, and in the use of radiation survey instruments; and

4. Has demonstrated understanding of the use of the equipment described in .04(16)(b)3. by successful completion of a practical examination.

(c) The licensee may not permit any individual to act as a radiographer's assistant until the individual:

1. Has received copies of and instruction in the requirements described in these regulations contained in this Rule, and applicable sections of Rules 391-3-17-03, .06 , and .07, in the license under which the radiographer's assistant will perform industrial radiography, and the licensee's operating and emergency procedures;

2. Has demonstrated an understanding of items in .04(16)(c)1. by successful completion of a written or oral examination;

3. Under the personal supervision of a radiographer, has received training in the use of the licensee's radiographic exposure devices and sealed sources, in the daily inspection of devices and associated equipment, and in the use of radiation survey instruments; and

4. Has demonstrated understanding of the use of the equipment described in .04(16)(c)3. by successful completion of a practical examination.

(d) The licensee shall provide annual refresher safety training for each radiographer and radiographer's assistant at intervals not to exceed 12 months.

(e) Except as provided in .04(16)(e)4., the radiation safety officer or designee shall conduct an inspection program of the job performance of each radiographer and radiographer's assistant to

ensure that the Department's regulations, the license, and operating and emergency procedures are followed. The inspection program must:

1. Include observation of the performance of each radiographer and radiographer's assistant during an actual industrial radiographic operation, at intervals not to exceed six months; and

2. Provide that, if a radiographer or a radiographer's assistant has not participated in an industrial radiographic operation for more than six months since the last inspection, the radiographer must demonstrate knowledge of the training requirements of .04(16)(b)3. and the radiographer's assistant must demonstrate knowledge of the training requirements of .04(16)(c)3. by a practical examination before these individuals can next participate in a radiographic operation.

3. The Department may consider alternative in those situations where the individual serves as both radiographer and radiation safety officer.

4. In those operations where a single individual serves as both radiographer and radiation safety officer, and performs all radiography operations, an inspection program is not required.

(f) The licensee shall maintain records of the above training to include certification documents, written, oral and practical examinations, refresher safety training and inspections of job performance in accordance with .04(31).

(g) The licensee shall include the following subjects required in .04(16)(a):

1. Fundamentals of Radiation Safety including:

(i) Characteristics of gamma and x-radiation.

(ii) Units of radiation dose (rem or Sievert) and quantity of radioactivity (Curie or becquerel).

(iii) Significance of radiation dose:

(I) Radiation protection standards;

(II) Biological effects of radiation dose; and

(III) Case histories of radiography accidents.

(iv) Levels of radiation from sources of radiation.

(v) Methods of controlling radiation dose:

(I) Working time;

(II) Working distances; and

(III) Shielding.

2. Radiation Detection Instrumentation including.

(i) Use of radiation survey instruments:

(I) Operation;

(II) Calibration; and

(Ill) Limitations.

(ii) Survey techniques.

(iii) Use of personnel monitoring equipment including but not limited to:

(I) Film badges;

(II) Thermoluminescent dosimeters (TLDs);

(Ill) Pocket dosimeters;

(IV) Alarm ratemeters; and

(V) Optically stimulated luminescent devices.

3. Radiographic Equipment to be Used including:

(i) Remote handling equipment.

(ii) Operation and control of radiographic exposure equipment, remote handling equipment, storage containers, and sealed sources, including pictures or models of source assemblies (pigtails).

(iii) Storage control, and disposal of sources of radiation; and transport containers and source changers.

(iv) Collimators.

4. Inspection and maintenance of equipment.

5. The Requirements of Pertinent Federal and State Regulations.

6. The Licensee's Written Operating and Emergency Procedures.

7. Case histories of accidents in radiography.

(h) Licensees will have one year from the effective date of this rule to comply with the additional training requirements specified in .04(16)(b)1. and .04(16)(c)1.

(17) **Operating and Emergency Procedures.**

(a) The operating and emergency procedures of the licensee shall include, as a minimum, instruction in the following:

1. Appropriate handling and use of sources of radiation so that no individual is likely to be exposed to radiation doses in excess of the limits established in Rule 391-3-17-.03, "Standards for Protection Against Radiation";

2. Methods and occasions for conducting radiation surveys;

3. Methods for posting and controlling access to radiographic areas;

4. Methods and occasions for locking and securing sealed sources;

5. Personnel monitoring and the use of personnel monitoring equipment;

6. Transporting equipment to field locations, including packing of radiographic exposure devices and storage containers in the vehicles, placarding of vehicles when required, and control of the equipment during transportation as described in Rule .06 of this Chapter;

7. The inspection, maintenance and operability checks of radiographic exposure devices, survey instruments, alarming ratemeters, transport containers, and storage containers.

8. Steps that must be taken immediately by radiography personnel in the event a pocket dosimeter is found to be off-scale or an alarming ratemeter alarms unexpectedly;

9. The procedure(s) for identifying and reporting defects and noncompliance, as required by .04(37);

10. The procedure for notifying proper persons in the event of an accident or incident;

11. Minimizing exposure of individuals in the event of an accident or incident, including a source disconnect, a transport accident, or loss of a source of radiation;

12. Source recovery procedure if licensee will perform source recoveries; and

13. Maintenance of records.

(b) The licensee shall maintain copies of current operating and emergency procedures in accordance with .04(32) and .04(36).

(18) **Supervision of Radiographer's Assistants.**

(a) Whenever a radiographer's assistant uses radiographic exposure devices, associated equipment, or a sealed source, or conducts radiation surveys required by (20)(b) and (c) of this Rule to determine that the sealed source has returned to the shielded position after an exposure, he shall be under the personal supervision of a radiographer. The personal supervision shall include:

1. The radiographer's physical presence at the site where the sealed sources are being used;

2. The ability of the radiographer to give immediate assistance if required; and

3. The radiographer's direct observation of the assistant's performance of the operations referred to in .04(18) of this Rule.

(19) **Personnel Monitoring Control.**

(a) The licensee shall not permit any individual to act as a radiographer or a radiographer's assistant unless, at all times during radiographic operations, each individual wears, on the trunk of the body, a combination of direct-reading dosimeter, an alarming ratemeter, and a personal monitoring device. At permanent radiographic installations where other appropriate alarming or warning devices are in routine use the use of an alarming ratemeter is not required.

1. Pocket dosimeters shall have a range from zero to 200 milliroentgens (2 millisieverts) and shall be recharged daily or at the start of each shift. Electronic personal dosimeters may only be used in place of ion-chamber pocket dosimeters.

2. Each personal monitoring device shall be assigned to and worn by only one individual.

3. Personal monitoring devices must be exchanged at periods not to exceed one month. After replacement each personal monitoring device must be returned to the supplier for processing within 14 calendar days of the end of the monitoring period, or as soon as practicable. If circumstances exist which make it impossible to return each personal monitoring device within 14 calendar days, such circumstances must be documented and available for review by the Department.

(b) Direct reading dosimeters such as pocket dosimeters or electronic personal dosimeters shall be read and exposures recorded at the beginning and end of each shift, and records must be maintained in accordance with .04(33).

(c) Pocket dosimeters or electronic personal dosimeters shall be checked at periods not to exceed one year for correct response to radiation, and records must be maintained in accordance with .04(33). Acceptable dosimeters shall read within plus or minus 20 percent of the true radiation exposure**.**

(d) If an individual's pocket dosimeter is found to be off-scale, or the electronic personal dosimeter reads greater than 200 mrem (2 millisieverts), the personal monitoring device must be sent for processing within 24 hours. In addition, the individual may not resume work associated with the use of sources of radiation until a determination of the individual's radiation exposure has been made. This determination must be made by the radiation safety officer or the radiation safety officer's designee. The results of this determination must be included in the records maintained in accordance with .04(33).

(e) If a personal monitoring device is lost or damaged, the worker shall cease work immediately until a replacement personal monitoring device is provided and the exposure is calculated for the time period from issuance to loss or damage of the personal monitoring device. The results of the calculated exposure and the time period for which the personal monitoring device was lost or damaged must be included in the records maintained in accordance with .04(33).

(f) Reports received from personal monitoring devices shall be retained in accordance with

.04(33).

(g) Each alarm ratemeter must:

1. Be checked to ensure that the alarm functions properly prior to use at the start of each shift;

2. Emit an alarm signal at a preset dose-rate of 500 mr (5 mSv) per hour; with an accuracy of plus or minus 20 percent of the true radiation dose rate.

3. Require special means to change the preset alarm function; and

4. Be calibrated at periods not to exceed one year for correct response to radiation. The licensee shall maintain records of alarming ratemeter calibrations in accordance with .04(33).

(20) **Radiation Surveys.** The license shall:

(a) Conduct all surveys with a calibrated and operable radiation survey instrument that meets the requirements of .04(8);

(b) Conduct a survey of the radiographic exposure device and the guide tube after each exposure when approaching the device or the guide tube. The survey shall be to determine that the sealed source has been returned to its shielded position before exchanging films, repositioning the exposure head, or dismantling equipment.

(c) Conduct a survey of the radiographic exposure device whenever the source is exchanged and whenever a radiographic exposure device is placed in a storage area as defined in .04(3), to ensure that the sealed source is in its shielded position; and

(d) Maintain records in accordance with .04(34).

(21) **Surveillance.** During each radiographic operation, the radiographer shall ensure continuous direct visual surveillance of the operation to protect against unauthorized entry into a radiation area or a high radiation area, as defined in Rule .01 of this Chapter, except at permanent radiographic installations where all entryways are locked and the requirements of .04(12) are met.

(22) **Posting.** Notwithstanding any provisions of Rule 391-3-17-.03(12)(c) all areas in which industrial radiography is being performed shall be conspicuously posted as required by Rule 391-3-17-.03(12)(b)1. and 2.

(23) **Records for Industrial Radiography.** Each licensee shall maintain a copy of its license, documents incorporated by reference, and amendments to each of these items until superseded by new documents approved by the Department, or until the Department terminates the license.

(24) **Records of Receipt and Transfer of Sources of Radiation.**

(a) Each licensee shall maintain records showing the receipts and transfers of sealed sources, devices using DU for shielding, and radiation machines, and retain each record for three years after it is made.

(b) These records must include the date, the name of the individual making the record, radionuclide, number of curies (becquerels) or mass (for DU), and manufacturer, model, and serial number of each source of radiation and/or device, as appropriate.

(25) **Records of Radiation Survey Instruments.** Each licensee shall maintain records of the calibrations of its radiation survey instruments that are required under .04(8) and retain each record for three years after it is made.

(26) **Records of Leak Testing of Sealed Sources and Devices Containing DU.** Each licensee shall maintain records of leak test results for sealed sources and for devices containing DU. The results must be stated in units of microcuries (becquerels). The licensee shall retain each record for three years after it is made or until the source in storage is removed.

(27) **Records of Quarterly Inventory.**

(a) Each licensee shall maintain records of the quarterly inventory of sources of radiation, including devices containing depleted uranium as required by .04(10), and retain each record for three years.

(b) The record must include the date of the inventory, name of the individual conducting the inventory, radionuclide, number of curies (becquerels) or mass (for DU) in each device, location of sources of radiation and/or devices, and manufacturer, model, and serial number of each source of radiation and/or device, as appropriate.

(28) **Utilization Logs.**

(a) Each licensee shall maintain utilization logs showing for each source of radiation the following information:

1. A description, including the make, model, and serial number the radiographic exposure device, transport, or storage container in which the sealed source is located;

2. The identity and signature of the radiographer to whom assigned;

3. The location and dates of use, including the dates removed and returned to storage; and

4. For permanent radiographic installations, the dates each radiographic exposure device is used.

(b) The licensee shall retain the logs required by .04(28)(a) for three years.

(29) **Records of Inspection and Maintenance of Radiographic Exposure Devices, Transport and Storage Containers, Associated Equipment, Source Changers, and Survey Instruments.**

(a) Each licensee shall maintain records specified in .04(11) of equipment problems found in daily checks and quarterly inspections of radiation machines, radiographic exposure devices, transport and storage containers, associated equipment, source changers, and survey instruments; and retain each record for three years after it is made.

(b) The record must include the date of check or inspection, name of inspector, equipment involved, any problems found, and what repair and/or maintenance, if any, was performed.

(30) **Records of Alarm System and Entrance Control Checks at Permanent Radiographic Installations.** Each licensee shall maintain records of alarm system and entrance control device tests required by .04(12) and retain each record for three years after it is made.

(31) **Records Of Training and Certification.** Each licensee shall maintain the following records for three years:

(a) Records of training of each radiographer and each radiographer's assistant. The record must include radiographer certification documents and verification of certification status, copies of written tests, dates of oral and practical examinations, the names of individuals conducting and receiving the oral and practical examinations, and a list of items tested and the results of the oral and practical examinations; and

(b) Records of annual refresher safety training and semi-annual inspections of job performance for each radiographer and each radiographer's assistant. The records must list the topics discussed during the refresher safety training, the dates the annual refresher safety training was conducted, and names of the instructors and attendees. For inspections of job performance, the records must also include a list showing the items checked and any non-compliance observed by the radiation safety officer or designee.

(32) **Copies of Operating and Emergency Procedures.** Each licensee shall maintain a copy of current operating and emergency procedures until the Department terminates the license. Superseded material must be retained for three years after the change is made.

(33) **Records of Personnel Monitoring.** Each licensee shall maintain the following exposure records specified in .04(19):

(a) Direct reading dosimeter readings and yearly operability checks required by .04(19)(b) and .04(19)(c) for three years after the record is made;

(b) Records of alarming ratemeter calibrations for three years after the record is made;

(c) Reports received from the personal dosimeter processor until the Department terminates the license; and

(d) Records of estimates of exposures as a result of off-scale personal direct reading dosimeters, or lost or damaged personnel monitoring device, until the Department terminates the license.

(34) **Records of Radiation Surveys.** Each licensee shall maintain a record of each exposure device survey conducted before the device is placed in storage as specified in .04(20)(c). Each record must be maintained for three years after it is made.

(35) **Form of Records.** Each record required by these rules must be legible throughout the specified retention period. The record may be the original or a reproduced copy or a microform provided that the copy or microform is authenticated by authorized personnel and that the microform is capable of reproducing a clear copy throughout the required retention period. The

record may also be stored in electronic media with the capability for producing legible, accurate, and complete records during the required retention period. Records, such as letters, drawings, and specifications, must include all pertinent information, such as stamps, initials, and signatures. The licensee shall maintain adequate safeguards against tampering with and loss of records.

(36) **Location Of Documents and Records.**

(a) Each licensee shall maintain copies of records required by this Rule and other applicable Rules of this Chapter at the location specified in .04(4)(k).

(b) Each licensee shall also maintain current copies of the following documents and records sufficient to demonstrate compliance at each applicable field station and each temporary job site:

1. The license authorizing the use of sources of radiation;

2. Operating and emergency procedures as required by .04(32);

3. A copy of Rules .02, .03, .04 of this Chapter;

4. Survey records required by .04(34) and Rule .03(8) of this Chapter as applicable for the period of operation at the site;

5. Records of dosimeter readings as required by .04(33);

6. Valid radiographer's identification cards issued by a certifying entity for each radiographer working at the temporary job site or field location;

7. Evidence of the latest instrument calibration of the radiation survey instruments in use at the site as required by .04(25);

8. Utilization logs for each source of radiation dispatched from that location as required by .04(28);

9. Records of equipment problems identified in daily checks of equipment as required by .04(29)(a);

10. Records of alarm system and entrance control checks required by .04(30), if applicable;

11. Evidence of the latest calibrations of alarming ratemeters and operability checks of dosimeters as required by .04(33);

12. The shipping papers for the transportation of radioactive materials required by Rule .06 of this Chapter; and

13. When operating under reciprocity pursuant to Rule 391-3-17-.02(20) of this Chapter, a copy of the applicable Agreement State license, Licensing State license, or Nuclear Regulatory Commission license authorizing the use of sources of radiation.

(37) **Notifications.**

(a) In addition to the reporting requirements specified in 10CFR 30.50 and in Rule 391-3-17 .03 of this Chapter, each licensee shall provide a written report to the Department within 30 days of the occurrence of any of the following incidents involving radiographic equipment:

1. Unintentional disconnection of the source assembly from the control cable.

2. Inability to retract the source assembly to its fully shielded position and secure it in this position.

3. Failure of any component, which is critical to safe operation of the device, to properly perform its intended function.

(b) The licensee shall include the following information in each report submitted under (37)(a)1. of this Rule and in each report of overexposure submitted under Rule 391-3-17-.03(15)(c) which involves failure of safety components of radiography equipment:

1. A description of the equipment problem;

2. Cause of each incident, if known;

3. Name of the manufacturer and model number of equipment involved in the incident;

4. Place, time, and date of the incident;

5. Actions taken to establish normal operations;

6. Corrective actions taken or planned to prevent recurrence; and

7. Qualifications of personnel involved in the incident.

(c) Any licensee conducting radiographic operations or storing sources of radiation at any location not listed on the license for a period in excess of 180 days in a calendar year, shall notify the Department prior to exceeding the 180 days.

(38) **Application and Examinations.**

(a) Application

1. Candidates for certification must submit to the Department a fully completed "Georgia Certification of Radiographers Application Form" accompanied by two passport-sized photographs and shall submit through the Department all fees required by the testing agency.

2. A non-refundable fee to cover the cost of the examination, training documentation review, and issuance of certification shall be submitted with the application.

3. The application and the non-refundable fee shall be submitted to the Department, and the fees shall be submitted through the Department to the testing agency, on or before the dates specified by the Department.

4. An individual whose certification ID card has been suspended or revoked shall obtain written approval from the Department to apply to retake the examination.

(b) Examination. The examination shall be given for the purpose of determining the qualifications of applicants.

1. A written examination shall be held at times and places determined by the Department. The scope of the examination and the methods of procedure, including determination of the passing score, shall be prescribed by the Department. The examination will assess the applicant's knowledge to safely use sources of radiation and related equipment and the applicant's knowledge of this Chapter.

2. The examination will be administered by the Department to persons authorized by the Department.

3. A candidate failing an examination may apply for re-examination in accordance with (38)(a) of this Rule and will be re-examined. A candidate shall not retake the same version of the Department-administered examination.

4. The examination will be held in Atlanta and other locations designated by the Department. Dates, times, and locations of the examination will be furnished by the Department.

5. The examination will be in the English language.

6. To take the examination, an individual shall have a picture identification card, such as a driver's license, at the time of the examination.

7. Calculators will be permitted during the examination. However, calculators or computers with preprogrammed data or formulas, including exposure calculators, will not be permitted during the examination.

8. The examination will be a "closed-book" examination.

9. Any individual observed by a Department proctor to be compromising the integrity of the examination shall be required to surrender the examination, the answer sheet, and any work paper. Such individual will not be allowed to complete the examination, will forfeit the examination fee, and will leave the examination site to avoid disturbing other examinees. Such individuals may resubmit a new application and an additional examination fee and must wait at least 90 days before taking a new examination.

10. Examination material shall be returned to the Department at the end of the examination. No photographic or other copying of examination questions or materials shall be permitted. Disclosure by an individual of the contents of any examination prior to its administration is prohibited.

11. The names and scores of individuals taking the examination shall be a public record.

(39) **Certification Identification (ID) Card.**

(a) A certification (ID) card shall be issued to each person who successfully completes the requirements of .04(16)(a)1. and the examination prescribed in .04(38)(b).

1. Each person's identification card shall contain his/her photograph. The applicants will provide two passport-sized photographs at the time the examination is administered.

2. The certification ID card remains the property of the State of Georgia and may be revoked or suspended.

3. Any individual who wishes to replace their ID card shall submit to the Department a written request for a replacement certification card, stating the reason a replacement certification card is needed. A non-refundable fee shall be paid through the Department to the issuing agency for each replacement of an certification card. The prescribed fee shall be submitted with the written request for a replacement certification card. The individual shall maintain a copy of the request in their possession while performing industrial radiographic operations until a replacement certification card is received from the Department.

(b) Each certification ID card is valid for a period of five years, unless revoked in accordance with .04(39)(d). Each certification ID card expires at the end of the last day of the month and year stated on the certification ID card.

(c) Renewal of certification ID Card.

1. Applications for examination to renew a certification ID card shall be filed in accordance with .04(38)(a).

2. The examination for renewal of a certification ID card shall be administered in accordance with .04(38)(b).

3. A renewal identification card shall be issued in accordance with .04(39)(a).

(d) Revocation or suspension of a certification ID Card.

1. Any radiographer who violates these regulations, equivalent State or Nuclear Regulatory Commission regulations, or any applicable statutory requirements may be required to show cause at a formal hearing why their certification ID card should not be revoked or suspended in accordance with .04(39)(d)2.

2. When a Department order has been issued for an industrial radiographer to cease and desist from the use of sources of radiation or the Department revokes or suspends their certification ID card, the industrial radiographer shall surrender the certification ID card to the Department until the order is changed or the suspension expires.

(40) **Reciprocity.**

(a) All reciprocal recognition of licenses by the Department will be granted in accordance with Rule 391-3-17-.02(20) of this Chapter.

(b) Reciprocal recognition by the Department of an individual radiographer certification will be granted provided that:

1. The individual holds a valid certification in the appropriate category issued by a certifying entity, as defined in .04(3);

2. The requirements and procedures of the certifying entity issuing the certification affords the same or comparable certification standards as those afforded by .04(16)(a);

3. The applicant presents the certification to the Department prior to entry into the state; and

4. No escalated enforcement action is pending with the Nuclear Regulatory Commission or in any other state.

(c) Certified individuals who are granted reciprocity by the Department shall maintain the certification upon which the reciprocal recognition was granted, or prior to the expiration of such certification, shall meet the requirements of .04(16)(a).

(41) **Specific Requirements for Radiographic Personnel Performing Industrial Radiography.**

(a) The licensee shall supply the following at the job site:

1. At least one operable, calibrated survey instrument for each exposure device in use;

2. A current whole body personal dosimeter for each individual;

3. An operable, calibrated pocket dosimeter with a range of zero to 200 milliroentgens for each person performing radiographic operations;

4. An operable, calibrated alarm ratemeter with preset dose-rate of 500 mr (5 mSv) per hour for each person performing radiographic operations using a radiographic exposure device; and

5. The appropriate barrier ropes and signs.

(b) Each radiographer at a job site shall have on their person a valid certification ID card issued by a certifying entity.

(c) Industrial radiographic operations shall not be performed if any of the items in .04(41)(a) or .04(41)(b) are not available at the job site or are inoperable.

(d) Each licensee shall provide as a minimum two-person crews, i.e., two radiographers or a radiographer assistant who is under the personal supervision of a radiographer, when sources of radiation are used at temporary job sites.

(e) No individual other than a radiographer or a radiographer assistant who is under the personal supervision of a radiographer shall manipulate controls or operate equipment used in industrial radiographic operations.

(f) During an inspection by the Department, the Department inspector may terminate an operation if any of the items in .04(41)(a) are not available and operable or if the required number of radiographic personnel are not present. Operations shall not be resumed until such conditions are met.

(g) Special Requirements for Enclosed Radiography. Systems for enclosed radiography designed to allow admittance of individuals shall:

1. Comply with all applicable requirements of this Rule and Rule 391-3-17-.03(5)(i); and

2. Be evaluated at intervals not to exceed one year to assure compliance with the applicable requirements as specified in .04(41)(g)1. Records of these evaluations shall be maintained for inspection by the Department for a period of two years after the evaluation.

(h) Prohibitions. Industrial radiography performed with a sealed source which is not fastened to or contained in a radiographic exposure device (fishpole technique) is prohibited unless specifically authorized in a license issued by the Department.

APPENDIX A

I. Requirements for an Independent Certifying Organization.

An independent certifying organization shall:

1. Be an organization such as a society or association, whose members participate in, or have an interest in, the field of industrial radiography;

2. Make its membership available to the general public nationwide. Membership shall not be restricted because of race, color, religion, sex, age, national origin or disability;

3. Have a certification program open to non-members, as well as members;

4. Be an incorporated, nationally-recognized organization that is involved in setting national standards of practice within its fields of expertise;

5. Have an adequate staff, a viable system for financing its operations, and a policy and decision-making review board;

6. Have a set of written organizational by-laws and policies that provide adequate assurance of lack of conflict of interest and a system for monitoring and enforcing those by-laws and policies;

7. Have a committee, whose members can carry out their responsibilities impartially, to review and approve the certification guidelines and procedures, and to advise the organization's staff in implementing the certification program;

8. Have a committee, whose members can carry out their responsibilities impartially, to review complaints against certified individuals and to determine appropriate sanctions;

9. Have written procedures describing all aspects of its certification program, maintain records of the current status of each individual's certification and the administration of its certification program;

10. Have procedures to ensure that certified individuals are provided due process with respect to the administration of its certification program, including the process of becoming certified and any sanctions imposed against certified individuals;

11. Have procedures for proctoring examinations, including qualifications for proctors. These procedures must ensure that the individuals proctoring each examination are not employed by the same company or corporation (or a wholly-owned subsidiary of such company or corporation) as any of the examinees;

12. Exchange information about certified individuals with the Nuclear Regulatory Commission and other independent certifying organizations and/or Agreement States and allow periodic review of its certification program and related records; and

13. Provide a description to the Nuclear Regulatory Commission of its procedures for choosing examination sites and for providing an appropriate examination environment.

II. Requirements for Certification Programs.

All certification programs must:

1. Require applicants for certification to (a) receive training in the topics set forth in .04(16)(g) or equivalent State or Nuclear Regulatory Commission regulations, and (b) satisfactorily complete a written examination covering these topics;

2. Require applicants for certification to provide documentation that demonstrates that the applicant has:

(a) Received training in the topics set forth in .04(16)(g) or equivalent State or Nuclear Regulatory Commission regulations;

(b) Satisfactorily completed a minimum period of on-the-job training as specified in .04(16)(a); and

(c) Received verification by a State licensee or a Nuclear Regulatory Commission licensee that the applicant has demonstrated the capability of independently working as a radiographer.

3. Include procedures to ensure that all examination questions are protected from disclosure;

4. Include procedures for denying an application and revoking, suspending, and reinstating a certification;

5. Provide a certification period of not less than three years nor more than five years;

6. Include procedures for renewing certifications and, if the procedures allow renewals without examination, require evidence of recent full-time employment and annual refresher training; and

7. Provide a timely response to inquiries, by telephone or letter, from members of the public, about an individual's certification status.

III. Requirements for Written Examinations.

All examinations must be:

1. Designed to test an individual's knowledge and understanding of the topics listed in .04(16)(g) or equivalent State or Nuclear Regulatory Commission requirements;

2. Written in a multiple-choice format;

3. Have test items drawn from a question bank containing psychometrically valid questions based on the material in .04(16)(g).

Authority O.C.G.A. Sec. 31-13-1 et seq. **History.** Original Rule entitled " Special Radiation Safety Requirements for Industrial Radiographic Operations" adopted. F. May 2, 1991; eff. May 22, 1991. **Amended:** F. Feb. 24, 1994; eff. Mar. 16, 1994. **Amended:** F. Oct. 4, 1994; eff. Oct. 24, 1994. **Amended:** F. Apr. 16, 1997; eff. May 6, 1997. **Amended:** F. Mar. 29, 2002; eff. Apr. 18, 2002.

391-3-17-.05 Use of Radionuclides in the Healing Arts. Amended

(1) **Purpose and Scope.** This Rule, 391-3-17-.05, establishes requirements and provisions for the production, preparation, compounding and use of radionuclides in the healing arts and for issuance of licenses authorizing these activities. These requirements and provisions provide for the radiation safety of workers, the general public, patients, and human research subjects. The requirements and provisions of this Rule are in addition to, and not in substitution for, others in these regulations unless specifically exempted. All numbered and lettered references within this Rule refer to parts of this Rule, unless stated otherwise.

(2) **Definitions.**

(a) "Accredited institution," means a teaching facility for nuclear medicine technology or radiation therapy technology whose standards are accepted by the United States Department of Education.

(b) "Address of use," means the building or buildings that are identified on the license and where radioactive material may be produced, prepared, received, used, or stored.

(c) "Area of use," means a portion of an address of use that has been set aside for the purpose of receiving, using, or storing radioactive material.

(d) "Authorized medical physicist," means an individual who:

1. Meets the requirements in Rules .05(23)(a) and .05(27); or

2. Is identified as an authorized medical physicist on a license or equivalent permit issued by the Department, Nuclear Regulatory Commission, Agreement State or Licensing State; or

3. Is identified as an authorized medical physicist on a permit issued by the Department, Nuclear Regulatory Commission, Agreement State or Licensing State specific license of broad scope that is authorized to permit the use of radioactive material.

(e) "Authorized nuclear pharmacist," means a pharmacist who:

1. Meets the requirements in Rules .05(24)(a) and .05(27); or

2. Is identified as an authorized nuclear pharmacist on a license or equivalent permit issued by the Department, Nuclear Regulatory Commission, Agreement State or Licensing State; or

3. Is identified as an authorized nuclear pharmacist on a permit issued by the Department, Nuclear Regulatory Commission, Agreement State or Licensing State specific license of broad scope that is authorized to permit the use of radioactive material.

(f) "Authorized user," means a physician, dentist, or podiatrist who:

1. Meets the requirements in Rule .05(27) and .05(43)(a), .05(47)(a),.05(52)(a), .05(53)(a), .05(54)(a), .05(63)(a), .05(66)(a), or.05(84)(a); or

2. Is identified as an authorized user on a license or equivalent permit issued by the Department, Nuclear Regulatory Commission, Agreement State or Licensing State; or

3. Is identified as an authorized user on a permit issued by the Department, Nuclear Regulatory Commission, Agreement State or Licensing State specific license of broad scope that is authorized to permit the use of radioactive material.

(g) "Brachytherapy," means a method of radiation therapy in which plated, embedded, activated, or sealed sources are utilized to deliver a radiation dose at a distance of up to a few centimeters, by surface, intracavitary, intraluminal or interstitial application.

(h) "Brachytherapy source," means a radioactive source or a manufacturer- assembled source train or a combination of these sources that is designed to deliver a therapeutic dose within a distance of a few centimeters.

(i) "Client's address," means the address of use or a temporary jobsite for the purpose of providing mobile medical service in accordance with Rule .05(38).

(j) "Dedicated check source," means a radioactive source that is used to assure the consistent response of a radiation detection or measurement device over several months or years.

(k) "Dentist," means an individual licensed to engage in the practice dentistry under the Authority of O.C.G.A. 43-11-40.

(l) "Diagnostic clinical procedures manual," means a collection of written procedures that describes each method (and other instructions and precautions) by which the licensee performs diagnostic clinical procedures; where each diagnostic clinical procedure has been approved by the authorized user and includes the radiopharmaceutical, dosage, and route of administration, or in the case of sealed sources for diagnosis, the procedure.

(m) "High dose-rate remote afterloader," (HDR) means a device that remotely delivers a dose rate in excess of 12 gray (1200 rad) per hour at the treatment site.

(n) "Low dose-rate remote afterloader," (LDR) means a device that remotely delivers a dose rate of less than or equal to 2 gray (200 rad) per hour at the treatment site.

(o) "Management," means the chief executive officer or other individual having the authority to manage, direct, or administer the licensee's activities, or those persons' delegate or delegates.

(p) "Manual brachytherapy," means a type of therapy in which brachytherapy sources are manually applied or inserted.

(q) "Medical institution," means an organization in which several medical disciplines are practiced.

(r) "Medical use," means the intentional internal or external administration of radioactive material or the radiation from radioactive material to patients or human research subjects under the supervision of an authorized user.

(s) "Medium dose-rate remote afterloader," (MDR) means a device that remotely delivers a dose rate of greater than 2 gray (200 rad), but less than, or equal to, 12 gray (1200 rad) per hour at the treatment site.

(t) "Misadministration," means an event that meets the criteria in Rule .05(115)(a).

(u) "Mobile medical service," means the transportation of radioactive material or its medical use at the client's address.

(v) "Nuclear medicine technologist," means an individual who meets the requirements of Rule .05(25)(a) and, is under the supervision of an authorized user, to prepare or administers radioactive drugs to patients or human research subjects, or perform *in vivo* or *in vitro* measurements for medical purposes.

(w) "Nuclear medicine technology," means the science and art of in vivo and in vitro detection and measurement of radioactivity and the administration of radioactive drugs to patients or human research subjects for diagnostic and therapeutic purposes.

(x) "Output," means the exposure rate, dose rate, or a quantity related in a known manner to these rates from a brachytherapy source, or a teletherapy, remote afterloader, or gamma stereotactic radiosurgery unit for a specified set of exposure conditions.

(y) "Patient intervention," means actions by the patient or human research subject, whether intentional or unintentional, such as dislodging or removing treatment devices or prematurely terminating the administration.

(z) "Pharmacist," means any individual who is licensed to practice Pharmacy in this State by the Georgia State Board of Pharmacy.

(aa) "Physician," means any person who is licensed to engage in the practice of medicine under the Authority of O.C.G.A. 43-34-20 or the limited practice of medicine under O.C.G.A. 43-35-1.

(bb) "Podiatrist," means an individual licensed by the appropriate authority to practice podiatry in the state of Georgia.

(cc) “Positron Emission Tomography (PET) radionuclide production facility” is defined as a facility operating a cyclotron or accelerator for the purpose of producing PET radionuclides.

(dd) "Preceptor," means an individual who provides, directs or verifies training and experience required for an individual to become an authorized user, an authorized medical physicist, an authorized nuclear pharmacist, or a Radiation Safety Officer.

(ee) "Prescribed dosage," means the specified activity or range of activity of radioactive drug as documented:

1. In a written directive; or

2. In accordance with the directions of the authorized user for procedures performed pursuant

to Rule .05(41), (44) and (48).

(ff) "Prescribed dose," means:

1. For gamma stereotactic radiosurgery, the total dose as documented in the written directive;

2. For teletherapy, the total dose and dose per fraction as documented in the written directive;

3. For brachytherapy, either the total source strength and exposure time or the total dose, as documented in the written directive; or

4. For remote brachytherapy afterloaders, the total dose and dose per fraction as documented in the written directive.

(gg) "Pulsed dose-rate remote afterloader," (PDR) means a special type of remote afterloading device that uses a single source capable of delivering dose rates in the "high dose-rate" range, but:

1. Is approximately one-tenth of the activity of typical high dose-rate remote afterloader sources; and

2. Is used to simulate the radiobiology of a low dose rate treatment by inserting the source for a given fraction of each hour.

(hh) "Radiation Safety Officer," means an individual who:

1. Meets the requirements in Rule .05(22)(a) or .05(22)(c)1. And .05(27); or

2. Is identified as a Radiation Safety Officer on a Nuclear Regulatory Commission or Agreement State license or other equivalent permit or license recognized by the Department for similar types and uses of radioactive material.

(ii) "Radiation therapist," means an individual who meets the requirements of Rule .05(25)(b) and is under the supervision of an authorized user to perform procedures and apply radiation emitted from sealed radioactive sources to human beings for therapeutic purposes.

(jj) "Radiation therapy technology," means the science and art of applying radiation emitted from sealed radioactive sources to patients or human research subjects for therapeutic purposes.

(kk) "Radioactive drug," means any chemical compound containing radioactive material that may be used on or administered to patients or human research subjects as an aid in the diagnosis, treatment, or prevention of disease or other abnormal condition.

(ll) "Sealed source," means any radioactive material that is encased in a capsule designed to prevent leakage or escape of the radioactive material.

(mm) "Sealed Source and Device Registry," means the national registry that contains the registration certificates maintained by the Nuclear Regulatory Commission, that summarize the

radiation safety information for the sealed sources and devices and describe the licensing and use conditions approved for the product.

(nn) "Stereotactic radiosurgery," means the use of external radiation in conjunction with a stereotactic guidance device to very precisely deliver a dose to a treatment site.

(oo) "Structured educational program," means an educational program designed to impart particular knowledge and practical education through interrelated studies and supervised training.

(pp) "Teletherapy," as used in this Rule, means a method of radiation therapy in which collimated gamma rays are delivered at a distance from the patient or human research subject.

(qq) "Temporary jobsite," as used in this Rule, means a location where mobile medical services are conducted other than the location(s) of use authorized on the license.

(rr) "Therapeutic dosage," means a dosage of unsealed radioactive material that is intended to deliver a radiation dose to a patient or human research subject for palliative or curative treatment.

(ss) "Therapeutic dose," means a radiation dose delivered from a sealed source containing radioactive material to a patient or human research subject for palliative or curative treatment.

(tt) "Treatment site," means the anatomical description of the tissue intended to receive a radiation dose, as described in a written directive.

(uu) "Type of use," means use of radioactive material as specified under Rule .05(41), (44), (48), (55), (65), (67) or (85).

(vv) "Unit dosage," means a dosage that:

1. Is obtained or prepared in accordance with the regulations for uses described in Rule .05(41), (44), (48); and

2. Is to be administered as a single dosage to a patient or human research subject without any further manipulation of the dosage after it is initially prepared.

(ww) "Written directive," means an authorized user's written order for the administration of radioactive material or radiation from radioactive material to a specific patient or human research subject, as specified in Rule .05(19).

(3) **Maintenance of Records.** Each record required by Rule .05 must be legible throughout the retention period specified by each Department regulation. The record may be the original, a reproduced copy, or a microform provided that the copy or microform is authenticated by authorized personnel and the microform is capable of producing a clear copy throughout the required retention period. The record may also be stored in electronic media with the capability for producing legible, accurate, and complete records during the required retention period. Records such as letters, drawings, and specifications, must include all pertinent information such as stamps, initials, and signatures. The licensee shall maintain adequate safeguards against tampering with and loss of records.

(4) **Provisions for Research Involving Human Subjects.** A licensee may conduct research involving human subjects using radioactive material provided:

(a) That the research is conducted, funded, supported, or regulated by a Federal agency that has implemented the Federal Policy for the Protection of Human Subjects. Otherwise, a licensee shall apply for and receive approval of a specific amendment to its Department license before conducting such research. Both types of licensees shall, at a minimum, obtain informed consent from the human subjects and obtain prior review and approval of the research activities by an "Institutional Review Board" in accordance with the meaning of these terms as defined and described in the Federal Policy for the Protection of Human Subjects;

(b) The research involving human subjects authorized in .05(4)(a) shall be conducted using radioactive material authorized for medical use in the license; and

(c) Nothing in Rule .05(4) relieves licensees from complying with the other requirements in Rule.05.

(5) **U.S. Food and Drug Administration, Federal, and State Requirements.** Nothing in Rule .05 relieves the licensee from complying with applicable U.S. Food and Drug Administration, other Federal, and State requirements governing radioactive drugs or devices.

(6) **Implementation.**

(a) A licensee shall implement the provisions in Rule .05 on July 1, 2003.

(b) When a requirement in Rule .05 differs from the requirement in an existing license condition, the requirement in Rule .05 shall govern.

(c) Any existing license condition that is not affected by a requirement in Rule .05 remains in effect until there is a license amendment or license renewal.

(d) If a license condition exempted a licensee from a provision of Rule .05 on July 1, 2003, it will continue to exempt a licensee from the corresponding provision in Rule .05.

(e) If a license condition cites provisions in Rule .05 that will be deleted on July 1, 2003, then the license condition remains in effect until there is a license amendment or license renewal that modifies or removes this condition.

(f) Licensees shall continue to comply with any license condition that requires it to implement procedures required by Rule .05(70), (76), (77) and (78) until there is a license amendment or renewal that modifies the license condition.

(7) **License Required.**

(a) A person may manufacture, produce, prepare, acquire, receive, possess, use, or transfer radioactive material for medical use only in accordance with a specific license issued by the Department, the Nuclear Regulatory Commission or an Agreement State, or as allowed in Rule .05(7)(b) or (7)(c).

(b) An individual may receive, possess, use, or transfer radioactive material in accordance with the regulations in Rule .05 under the supervision of an authorized user as provided in Rule .05(18), unless prohibited by license condition.

(c) An individual may prepare unsealed radioactive material for medical use in accordance with the regulations in Rule .05 under the supervision of an authorized nuclear pharmacist or authorized user as provided in Rule .05(18), unless prohibited by license condition.

(8) **Application for License, Amendment, or Renewal.**

(a) An application must be signed by the applicant's or licensee's management.

(b) An application for a license for medical use of radioactive material as described in Rule .05(41), (44), (48), (55), (65), (67) or (85) must be made by:

1. Filing an original Application for Radioactive Materials License, and

2. Submitting procedures required by sections Rule .05(70), (76), (77), and (78), as applicable.

(c) A request for a license amendment or renewal must be made by:

1. Submitting an original in letter format.

2. Submitting procedures required by sections Rule .05(70), (76), (77) and (78), as applicable.

(d) In addition to the requirements in (8)(b) and (8)(c), an application for a license or amendment for medical use of radioactive material as described in (85) of Rule .05 must also include information regarding any radiation safety aspects of the medical use of the material that is not addressed in Rule .05(1) through Rule .05(40), as well as any specific information on:

1. Radiation safety precautions and instructions;

2. Training and experience of proposed users;

3. Methodology for measurement of dosages or doses to be administered to patients or human research subjects; and

4. Calibration, maintenance, and repair of instruments and equipment necessary for radiation safety.

(e) The applicant or licensee shall also provide any other information requested by the Department in its review of the application.

(f) An applicant that satisfies the requirements specified in Rule .02(10)(b) may apply for a Type A specific license of broad scope.

(9) **Mobile Medical Service Administrative Requirements.**

(a) The Department shall license mobile medical services or clients of such services. The mobile medical service shall be licensed if the service receives, uses or possesses radioactive

material. The client of the mobile medical service shall be licensed if the client receives or possesses radioactive material to be used by a mobile medical service.

(b) Mobile medical service licensees shall obtain a letter signed by the management of each location where services are rendered that authorizes use of radioactive material at the clinic's address of use. This letter shall clearly delineate the authority and responsibility of both the client and the mobile medical service. If the client is licensed, the letter shall document procedures for notification, receipt, storage and documentation of transfer of radioactive material delivered to the client's address for use by the mobile medical service.

(c) A mobile medical service shall not have radioactive material delivered directly from the manufacturer or the distributor to the client unless the client has a license allowing possession of the radioactive material. Radioactive material delivered to the client shall be received and handled in conformance with the client's license.

(d) A mobile medical service shall inform the client's management who is on site at each client's address of use at the time that radioactive material is being administered.

(e) A licensee providing mobile medical services shall retain the letter required in (9)(b) in accordance with Rule .05(97).

(f) A mobile medical service licensee shall maintain on each mobile unit:

1. The current operating and emergency procedures;

2. A copy of the license;

3. Copies of the letter required by .05(9)(b);

4. Current calibration records for each survey instrument and diagnostic equipment or dose delivery device in use; and

5. Survey records covering uses associated with the mobile unit during, at a minimum, the preceding 30 calendar days.

(g) A mobile medical service licensee shall maintain records required by Rules .03 and .05 of this Chapter at a location within the Department's jurisdiction that is:

1. A single address of use:

(i) Identified as the records retention location; and

(ii) Staffed at all reasonable hours by individual(s) authorized to provide the Department with access for purposes of inspection; or

2. When no address of use is identified on the license for records retention, the mobile unit:

(i) Identified in the license; and

(ii) Whose current client's address schedule and location schedule is reported to the Department.

(10) **License Amendments.** A licensee shall apply for and must receive a license amendment:

(a) Before it receives, prepares or uses radioactive material for a type of use that is permitted under Rule .05, but that is not authorized on the licensee's current license issued pursuant to Rule .05;

(b) Before it permits anyone to work as an authorized user, authorized nuclear pharmacist, or authorized medical physicist under the license, except an individual who is:

1. For an authorized user, an individual who meets the requirements in Rule .05(27) and (43)(a), Rule .05(47)(a), (52)(a), (53)(a), (54)(a), (63)(a), (64)(a), (66)(a), or (84)(a) or;

2. For an authorized nuclear pharmacist, an individual who meets the requirements in Rule .05(24)(a) and (27);

3. For an authorized medical physicist, an individual who meets the requirements in Rule .05(23)(a) and (27);

4. Identified as an authorized user, an authorized nuclear pharmacist, or authorized medical physicist on a Nuclear Regulatory Commission or Agreement State license or Licensing State license or other equivalent permit or license recognized by the Department that authorizes the use of radioactive material in medical use or in the practice of nuclear pharmacy, respectively; or

5. Identified as an authorized user, an authorized nuclear pharmacist, or authorized medical physicist on a permit issued by a Nuclear Regulatory Commission or Agreement State or Licensing State specific licensee of broad scope that is authorized to permit the use of radioactive material in medical use or in the practice of nuclear pharmacy, respectively.

(c) Before it changes Radiation Safety Officers, except as provided in (15)(c);

(d) Before it receives radioactive material in excess of the amount, or in a different physical or chemical form than is authorized on the license;

(e) Before it adds to or changes the areas of use identified in the application or on the license, except as specified in (11)(b)4.;

(f) Before it changes the address(es) of use identified in the application or on the license;

(g) Before it changes statements, representations, and procedures which are incorporated into the license; and

(h) Before it releases licensed facilities for unrestricted use.

(11) **Notifications.**

(a) A licensee shall provide to the Department a copy of the board certification, the Nuclear Regulatory Commission, Agreement State or Licensing State license, or the permit issued by a licensee of broad scope for each individual no later than 30 days after the date that the licensee permits the individual to work as an authorized user, an authorized nuclear pharmacist or an authorized medical physicist, pursuant to (10)(b).

(b) A licensee shall notify the Department by letter no later than 30 days after:

1. A Radiation Safety Officer permanently discontinues performance of duties under the license or has a name change;

2. The licensee's mailing address changes;

3. The licensee's name changes, but the name change does not constitute a transfer of control of the license as described in Rule .02 (13)(b) of these regulations; or

4. The licensee has added to or changed the areas where radioactive material is used in accordance with Rule .05(41) and (44).

(12) **Exemptions Regarding Type A Specific Licenses of Broad Scope.** A licensee possessing a Type A specific license of broad scope for medical use is exempt from:

(a) The provisions of (8)(d) of these regulations, regarding the need to file an amendment to the license for medical uses of radioactive material, as described in .05(85);

(b) The provisions of (10)(b) regarding the need to file an amendment before permitting anyone to work as an authorized user, an authorized nuclear pharmacist or an authorized medical physicist under the license;

(c) The provisions of (10)(e) regarding additions to or changes in the areas of use at the addresses specified in the license;

(d) The provisions of .05(11)(a) regarding notification to the Department for new authorized users, new authorized nuclear pharmacists and new authorized medical physicists; and

(e) The provisions of .05(21)(a) regarding suppliers for sealed sources.

(13) **License Issuance.**

(a) The Department shall issue a license for the medical use of radioactive material if:

1. The applicant has filed Application for Radioactive Materials License in accordance with the instructions in .05(8);

2. The applicant has paid any applicable fee;

3. The applicant meets the requirements of Rule .02 of this Chapter; and

4. The Department finds the applicant equipped and committed to observe the safety standards established by the Department in these regulations for the protection of the public

health and safety.

(b) The Department shall issue a license for mobile services if the applicant:

1. Meets the requirements in .05(13)(a); and

2. Assures that individuals to whom radioactive drugs or radiation from implants containing radioactive material will be administered, may be released following treatment in accordance with .05(37).

(14) **Specific Exemptions.** The Department may, upon application of any interested person or upon its own initiative, grant such exemptions from the regulations in Rule .05 as it determines are authorized by law and will not endanger life or property or the common defense and security and are otherwise in the public interest.

General Administrative Requirements

(15) **Authority and Responsibilities for the Radiation Protection Program.**

(a) In addition to the radiation protection program requirements of Rule .03(4), a licensee's management must approve in writing:

1. Requests for license application, renewal, or amendments before submittal to the Department;

2. Any individual before allowing that individual to work as an authorized user, authorized nuclear pharmacist or authorized medical physicist, and

3. Radiation protection program changes that do not require a license amendment and are permitted under .05(16);

(b) A licensee's management shall appoint a Radiation Safety Officer, who agrees in writing to be responsible for implementing the radiation protection program. The licensee, through the Radiation Safety Officer, shall ensure that radiation safety activities are being performed in accordance with licensee-approved procedures and regulatory requirements.

(c) For up to sixty days each year, a licensee may permit an authorized user or an individual qualified to be a radiation safety officer to function as a temporary Radiation Safety Officer and to perform the functions of a Radiation Safety Officer, as provided in .05(15)(e), provided the licensee takes the actions required in .05(15)(b),(d),(e) and (h) A licensee may simultaneously appoint more than one temporary RSO, if needed, to ensure that the licensee has a temporary RSO that satisfies the requirements to be an RSO for each of the different uses of radioactive material permitted by the license.

(d) A licensee shall establish in writing the authority, duties, and responsibilities of the Radiation Safety Officer.

(e) A licensee shall provide the Radiation Safety Officer sufficient authority, organizational freedom, time, resources, and management prerogative, to:

1. Identify radiation safety problems;

2. Initiate, recommend, or provide corrective actions;

3. Stop unsafe operations; and,

4. Verify implementation of corrective actions.

(f) Licensees that are authorized for two or more different types of radioactive material use under Rule .05(48), (55), (67), and (85), or two or more types of units under Rule .05(67) shall establish a Radiation Safety Committee to oversee all uses of radioactive material permitted by the license. The Committee must include an authorized user of each type of use permitted by the license, the Radiation Safety Officer, a representative of the nursing service, and a representative of management who is neither an authorized user nor a Radiation Safety Officer, and may include other members as the licensee deems appropriate.

(g) A licensee's Radiation Safety Committee shall meet as necessary, but at a minimum shall meet at intervals not to exceed six months. The licensee shall maintain minutes of each required meeting in accordance with Rule .05(86)(c).

(h) A licensee shall retain a record of actions taken pursuant to Rule .05(15)(a), (15)(b) and (15)(d) in accordance with Rule .05(86)(a) and (b).

(16) **Radiation Protection Program Changes.**

(a) A licensee may revise its radiation protection program without Department approval if:

1. The revision does not require an amendment under Rule .05(10);

2. The revision is in compliance with the regulations and the license;

3. The revision has been reviewed and approved by the Radiation Safety Officer, licensee management and licensee's Radiation Safety Committee (if applicable); and

4. The affected individuals are instructed on the revised program before the changes are implemented.

(b) A licensee shall retain a record of each change in accordance with Rule .05(87).

(17) **Duties of Authorized User and Authorized Medical Physicist,**

(a) A licensee shall assure that only authorized users for the type of radioactive material use:

1. Prescribe the radiopharmaceutical dosage and/or dose to be administered through the issuance of a written directive or reference to the diagnostic clinical procedures manual;

2. Direct, as specified in Rule .05(18) and (19), or in license conditions, the administration of radioactive material for medical use to patients or human research subjects; and

3. Prepare and administer, or supervise the preparation and administration of radioactive material for medical use, in accordance with Rule .05(7)(b) and (7)(c) and (18).

(b) A licensee shall assure that only authorized medical physicists perform, as applicable:

1. Full calibration measurements as described in Rule .05(73), (74), and (75);

2. Periodic spot checks as described in Rule .05(76), (77), and (78);and

3. Radiation surveys as described in Rule 5(80).

(18) **Supervision.**

(a) A licensee that permits the receipt, possession, use, or transfer of radioactive material by an individual under the supervision of an authorized user or as allowed by Rule .05(7)(b) shall:

1. In addition to the requirements in Rule .07(3) of this Chapter, instruct the supervised individual in the licensee's written radiation protection procedures, written directive procedures, regulations of Rule .05, and license conditions with respect to the use of radioactive material; and

2. Require the supervised individual to follow the instructions of the supervising authorized user for medical uses of radioactive material, written radiation protection procedures, written directive procedures, regulations of Rule .05, and license conditions with respect to the medical use of radioactive material.

(b) A licensee that permits the preparation of radioactive material for medical use by an individual under the supervision of an authorized nuclear pharmacist or physician who is an authorized user, as allowed by Rule .05(7)(c), shall:

1. Instruct the supervised individual in the preparation of radioactive material for medical use, as appropriate to that individual's involvement with radioactive material; and

2. Require the supervised individual to follow the instructions of the supervising authorized user or authorized nuclear pharmacist regarding the preparation of radioactive material for medical use, the written radiation protection procedures, the regulations of Rule .05, and license conditions.

(c) Unless physical presence is required in other sections of Rule .05, a licensee who permits supervised activities under Rule .05(18)(a) and (18)(b) shall require an authorized user to be immediately available to communicate with the supervised individual, and when a written directive is required, be able to be physically present within one hour of notification; and

(d) A licensee that permits supervised activities under Rule .05(18)(a) and (18)(b) is responsible for the acts and omissions of the supervised individual.

(19) **Written Directives.**

(a) A written directive must be dated and signed by an authorized user prior to administration of

I-131 sodium iodide greater than 1.11 megabecquerel (30 µCi), any therapeutic dosage of radioactive material or any therapeutic dose of radiation from radioactive material.

1. If, because of the emergent nature of the patient's condition, a delay in order to provide a written directive would jeopardize the patient's health, an oral directive will be acceptable, provided that the information contained in the oral directive is documented as soon as possible in writing in the patient's record and a written directive is prepared within 48 hours of the oral directive.

2. A written revision to an existing written directive may be made provided that the revision is dated and signed by an authorized user prior to the administration of the dosage of radioactive drug containing radioactive material, the brachytherapy dose, the gamma stereotactic radiosurgery dose, the teletherapy dose, or the next fractional dose.

3. If, because of the patient's condition, a delay in order to provide a written revision to an existing written directive would jeopardize the patient's health, an oral revision to an existing written directive will be acceptable, provided that the oral revision is documented as soon as possible in the patient's record and a revised written directive is signed by the authorized user within 48 hours of the oral revision.

(b) The written directive must contain the patient or human research subject's name and the following:

1. For an administration of a dosage of radioactive drug containing radioactive material, the radioactive drug containing radioactive material, dosage, and route of administration;

2. For gamma stereotactic radiosurgery, the total dose, treatment site, and number of target coordinate settings per treatment for each anatomically distinct treatment site;

3. For teletherapy, the total dose, dose per fraction, number of fractions, and treatment site;

4. For high dose rate remote afterloading brachytherapy, the radionuclide, treatment site, dose per fraction, number of fractions, and total dose; or

5. For all other brachytherapy including LDR, MDR, and PDR:

(i) Prior to implantation: treatment site, the radionuclide, and dose; and

(ii) After implantation but prior to completion of the procedure: the radioisotope, treatment site, number of sources, and total source strength and exposure time (or, the total dose).

(c) The licensee shall retain the written directive in accordance with Rule.05 (88).

(20) **Procedures for Administrations Requiring a Written Directive.**

(a) For any administration requiring a written directive, the licensee shall develop, implement, and maintain written procedures to provide high confidence that:

1. The patient's or human research subject's identity is verified before each administration; and

2. Each administration is in accordance with the written directive.

(b) The procedures required by Rule .05(20)(a) must, at a minimum, address the following items that are applicable for the licensee's use of radioactive material:

1. Verifying the identity of the patient or human research subject;

2. Verifying that the specific details of the administration are in accordance with the treatment plan, if applicable, and the written directive;

3. Checking both manual and computer-generated dose calculations; and

4. Verifying that any computer-generated dose calculations are correctly transferred into the consoles of therapeutic medical units authorized by Rule .05(67).

(21) **Suppliers for Sealed Sources or Devices for Medical Use.** For medical use, a licensee may only use:

(a) Sealed sources or devices initially manufactured, labeled, packaged, and distributed in accordance with a license issued pursuant to Rule .02 of this Chapter or the equivalent requirements of the Nuclear Regulatory Commission, an Agreement State or a Licensing State; or

(b) Sealed sources or devices non-commercially transferred from Rule .05 licensee or a Nuclear Regulatory Commission, an Agreement State or a Licensing State medical use licensee.

(22) **Training for Radiation Safety Officer.** Except as provided in Rule .05(26), the licensee shall require an individual fulfilling the responsibilities of the Radiation Safety Officer (RSO) as provided in Rule .05(15) to be an individual who:

(a) Is certified by a specialty board whose certification process includes all of the requirements in Rule. 05(22)(d) and (e), and whose certification has been recognized by the Nuclear Regulatory Commission or an Agreement State. (The names of board certifications that have been recognized by the Nuclear Regulatory Commission or an Agreement State will be posted on the NRC's Web page.) To have its certification process recognized, a specialty board shall require all candidates for certification to:

1. (i) Hold a bachelor's or graduate degree from an accredited college or university in physical science or engineering or biological science with a minimum of 20 college credits in physical science;

(ii) Have 5 or more years of professional experience in health physics (graduate training may be substituted for no more than 2 years of the required experience) including at least 3 years in applied health physics; and

(iii) Pass an examination administered by diplomates of the specialty board, which evaluates knowledge and competence in radiation physics and instrumentation, radiation protection, mathematics pertaining to the use and measurement of radioactivity, radiation biology, and

radiation dosimetry; or

2. (i) Hold a master's or doctor's degree in physics, medical physics, other physical science, engineering, or applied mathematics from an accredited college or university;

(ii) Have 2 years of full-time practical training and/or supervised experience in medical physics:

(I) Under the supervision of a medical physicist who is certified in medical physics by a specialty board recognized by the Nuclear Regulatory Commission or an Agreement State; or

(II) In clinical nuclear medicine facilities providing diagnostic and/or therapeutic services under the direction of physicians who meet the requirements for authorized users in Rule .05(26), .05(47) or .05(52); and

(iii) Pass an examination, administered by diplomates of the specialty board, that assesses knowledge and competence in clinical diagnostic radiological or nuclear medicine physics and in radiation safety; or

(b) 1. Has completed a structured educational program consisting of both:

(i) 200 hours of classroom and laboratory training in the following areas:

(I) Radiation physics and instrumentation;

(II) Radiation protection;

(III) Mathematics pertaining to the use and measurement of radioactivity;

(IV) Radiation biology; and

(V) Radiation dosimetry; and

(ii) One year of full-time radiation safety experience under the supervision of the individual identified as the RSO on a Nuclear Regulatory Commission or Agreement State license that authorizes similar type(s) of use(s) of radioactive material involving the following;

(I) Shipping, receiving, and performing related radiation surveys;

(II) Using and performing checks for proper operation of dose calibrators, survey meters, and instruments used to measure radionuclides;

(III) Securing and controlling radioactive material;

(IV) Using administrative controls to avoid mistakes in the administration of radioactive material;

(V) Using procedures to prevent or minimize radioactive contamination and using proper decontamination procedures;

(VI) Using emergency procedures to control radioactive material; and

(VII) Disposing of radioactive material; or

(c) 1. Is a medical physicist who has been certified by a specialty board whose certification process has been recognized by the Nuclear Regulatory Commission or an Agreement State under Rule .05(23)(a) and has experience in radiation safety for similar types of use of byproduct material for which the licensee is seeking the approval of the individual as Radiation Safety Officer and who meets the requirements in .05(22)(d) and .05(22)(e); or

2. Is an authorized user, authorized medical physicist, or authorized nuclear pharmacist identified on the licensee's license and has experience with the radiation safety aspects of similar types of use of radioactive material for which the individual has Radiation Safety Officer responsibilities; and

(d) Has obtained written attestation, signed by a preceptor Radiation Safety Officer, that the individual has satisfactorily completed the requirements in paragraph .05(22)(e) and .05(22)(a)1.(i) and .05(22)(a)1.(ii) or .05(22)(a)2.(i) and .05(22)(a)2.(ii) or .05(22)(b)1. or .05(22)(c)1. or .05(22)(c)2., and has achieved a level of radiation safety knowledge sufficient to function independently as a Radiation Safety Officer for a medical use licensee; and

(e) Has training in the radiation safety, regulatory issues, and emergency procedures for the types of use for which a licensee seeks approval. This training requirement may be satisfied by completing training that is supervised by a Radiation Safety Officer, authorized medical physicist, authorized nuclear pharmacist, or authorized user, as appropriate, who is authorized for the type(s) of use for which the licensee is seeking approval.

(23) **Training for Authorized Medical Physicist.** Except as provided in Rule .05(26) the licensee shall require the authorized medical physicist to be an individual who:

(a) Is certified by a specialty board whose certification process includes all of the training and experience requirements in .05(23)(b)2. and .05(23)(c) and whose certification has been recognized by the Nuclear Regulatory Commission or an Agreement State. (The names of board certifications that have been recognized by the Nuclear Regulatory Commission or an Agreement State will be posted on the NRC's Web page.) To have its certification process recognized, a specialty board shall require all candidates for certification to:

1. Hold a master's or doctor's degree in physics, medical physics, other physical science, engineering, or applied mathematics from an accredited college or university;

2. Have 2 years of full-time practical training and/or supervised experience in medical physics:

(i) Under the supervision of a medical physicist who is certified in medical physics by a specialty board recognized by the Nuclear Regulatory Commission or an Agreement State; or

(ii) In clinical radiation facilities providing high-energy, external beam therapy (photons and electrons with energies greater than or equal to 1 million electron volts) and brachytherapy services under the direction of physicians who meet the requirements for authorized users in Rule .05(26), .05(63) or .05(84); and

3. Pass an examination, administered by diplomates of the specialty board, that assesses knowledge and competence in clinical radiation therapy, radiation safety, calibration, quality assurance, and treatment planning for external beam therapy, brachytherapy, and stereotactic radiosurgery; or

(b) 1. Holds a master's or doctor's degree in physics, medical physics,other physical science, engineering, or applied mathematics from an accredited college or university; and has completed 1 year of full-time training in medical physics and an additional year of full- time work experience under the supervision of an individual who meets the requirements for an authorized medical physicist for the type(s) of use for which the individual is seeking authorization. This training and work experience must be conducted in clinical radiation facilities that provide high-energy, external beam therapy (photons and electrons with energies greater than or equal to 1 million electron volts) and brachytherapy services and must include:

(i) Performing sealed source leak tests and inventories;

(ii) Performing decay corrections;

(iii) Performing full calibration and periodic spot checks of external beam treatment units, stereotactic radiosurgery units, and remote afterloading units as applicable; and

(iv) Conducting radiation surveys around external beam treatment units, stereotactic radiosurgery units, and remote afterloading units as applicable; and

2. Has obtained written attestation that the individual has satisfactorily completed the requirements in .05(23)(c) and .05(23)(a)1. and 2., or .05(23)(b)1. and .05(23)(c) of this section, and has achieved a level of competency sufficient to function independently as an authorized medical physicist for each type of therapeutic medical unit for which the individual is requesting authorized medical physicist status. The written attestation must be signed by a preceptor authorized medical physicist who meets the requirements in Rule .05(23) and .05(26), or equivalent Nuclear Regulatory Commission or Agreement State requirements for an authorized medical physicist for each type of therapeutic medical unit for which the individual is requesting authorized medical physicist status; and

(c) Has training for the type(s) of use for which authorization is sought that includes hands-on device operation, safety procedures, clinical use, and the operation of a treatment planning system. This training requirement may be satisfied by satisfactorily completing either a training program provided by the vendor or by training supervised by an authorized medical physicist authorized for the type(s) of use for which the individual is seeking authorization.

(24) **Training for an Authorized Nuclear Pharmacist.** Except as provided in Rule .05(26), the licensee shall require the authorized nuclear pharmacist to be a pharmacist who:

(a) Is certified by a specialty board whose certification process has been recognized by the Nuclear Regulatory Commission or an Agreement State and who meets the requirements in .05(24)(b)2. (The names of board certifications that have been recognized by the Nuclear Regulatory Commission or an Agreement State will be posted on the NRC's Web page.) To have its certification process recognized, a specialty board shall require all candidates for certification to:

1. Have graduated from a pharmacy program accredited by the American Council on Pharmaceutical Education (ACPE) or have passed the Foreign Pharmacy Graduate Examination Committee (FPGEC) examination;

2. Hold a current, active license to practice pharmacy;

3. Provide evidence of having acquired at least 4,000 hours of training/experience in nuclear pharmacy practice. Academic training may be substituted for no more than 2,000 hours of the required training and experience; and

4. Pass an examination in nuclear pharmacy administered by diplomates of the specialty board, that assesses knowledge and competency in procurement, compounding, quality assurance, dispensing, distribution, health and safety, radiation safety, provision of information and consultation, monitoring patient outcomes, research and development; or

(b) 1. Has completed 700 hours in a structured educational program consisting of both:

(i) 200 hours of classroom and laboratory training in the following areas

(I) Radiation physics and instrumentation;

(II) Radiation protection;

(III) Mathematics pertaining to the use and measurement of radioactivity;

(IV) Chemistry of radioactive material for medical use; and

(V) Radiation biology; and

(ii) Supervised practical experience in a nuclear pharmacy involving:

(I) Shipping, receiving, and performing related radiation surveys;

(II) Using and performing checks for proper operation of dose calibrators, survey meters, and, if appropriate, instruments used to measure alpha or beta-emitting radionuclides;

(III) Calculating, assaying, and safely preparing dosages for patients or human research subjects;

(IV) Using administrative controls to avoid misadministrations in the administration of radioactive material; and

(V) Using procedures to prevent or minimize radioactive contamination and using proper decontamination procedures; and

2. Has obtained written attestation, signed by a preceptor authorized nuclear pharmacist, that the individual has satisfactorily completed the requirements in Rule .05(24)(a)1., .05(24)(a)2). and .05(24)(a)3. or .05(24)(b)1. and has achieved a level of competency sufficient to independently operate a nuclear pharmacy, and

(c) Licensed as a Nuclear Pharmacist by the Georgia Board of Pharmacy.

(25) **Training and Technical Requirements for Nuclear Medicine Technologists and Radiation Therapists.**

(a) The licensee shall require a nuclear medicine technologist using radioactive materials under the supervision of an authorized user to be an individual who:

1. Is certified in:

(i) Nuclear Medicine by the Nuclear Medicine Technology Certification Board;

(ii) Nuclear Medicine by the American Registry of Radiologic Technologists with competency in Nuclear Medicine; or,

2. Is board eligible to take the CNMT or ARRT(N) examinations; or,

3. Has successfully completed a training program in nuclear medicine which has resulted in a certificate, associate degree, or baccalaureate degree in a nuclear medicine technology program from an accredited institution; or,

4. Has performed as a full-time nuclear medicine technologist for a minimum of two years during the past five-year period under the supervision of an authorized user who attests the experience in writing; or,

5. Has completed 80 hours of training and experience in basic radionuclide handling techniques applicable to the medical use of unsealed radioactive material that includes:

(i) Classroom and laboratory training in the following areas:

(I) Radiation physics and instrumentation;

(II) Radiation protection;

(III) Mathematics pertaining to the use and measurement of radioactivity;

(IV) Chemistry of radioactive material for medical use; and

(V) Radiation biology; and

(ii) Work experience, under the supervision of an authorized user involving:

(I) Ordering, receiving, and unpacking radioactive materials safely and performing the related radiation surveys;

(II) Quality Control checking of instruments used to determine the activity of dosages and performing checks for proper operation of survey meters;

(III) Calculating, measuring, and safely preparing patient or human research subject dosages;

(IV) Using administrative controls to prevent a misadministration involving the use of unsealed

radioactive material;

(V) Using procedures to contain spilled radioactive material safely and using proper decontamination procedures;

(VI) Administering dosages to patients or human research subjects; and

(iii) Has obtained written attestation, signed by a preceptor authorized user that the individual has satisfactorily completed the requirements of this section and has achieved a level of competency sufficient to independently function as a nuclear medicine technologist.

(b) The licensee shall require a radiation therapist using radioactive materials under the supervision of an authorized user to be an individual who:

1. Is certified in Radiation Therapy by the American Registry of Radiologic Technologists (ARRT(T)); or

2. Is board eligible to take the ARRT(T) examination; or,

3. Has successfully completed a training program in radiation therapy which has resulted in a certificate, associate degree, or baccalaureate degree in a radiologic technology program that complies with the requirements of the Joint Review Committee on Education in Radiologic Technology[1];or,

4. Has performed as a full-time radiation therapist for a minimum of two years during the past five-year period under the supervision of an authorized user who attests the experience in writing; or

5. Has completed 200 hours of training and experience in basic radionuclide handling techniques applicable to the medical use of radioactive material that includes:

(i) Classroom and laboratory training in the following areas:

(I) Radiation physics and instrumentation;

(II) Radiation protection;

(III) Mathematics pertaining to the use and measurement of radioactivity; and

(IV) Radiation biology; and

(ii) Work experience, under the supervision of an authorized user involving:

(I) Ordering, receiving, and unpacking radioactive materials safely and performing the related radiation surveys;

(II) Assisting the authorized user in simulating the patient for treatment;

1 "Essentials and guidelines of an Accredited Educational Program for the Radiation Therapy Technologist", Joint Review Committee on Education in Radiologic Technology, 1988.

(III) Preparing the patient for treatment;

(IV) Implementing treatment plans as prescribed by the authorized user;

(V) Providing written documentation of treatment setup and patient treatments;

(VI) Quality control checks to determine that devices used to deliver the radiation doses are in compliance with institutional standards and performing checks for proper operation of survey meters;

(VII) Preparing or assisting in the preparation of sources, and implantation and removal of sealed sources;

(VIII) Delivering doses to patients or human research subjects under the supervision of the authorized user;

(IX) Preparing, implanting, and removing sealed sources;

(X) Delivering dose to patients or human research subjects;

(XI) Maintaining running inventories of material on hand;

(XII) Using administrative controls to prevent a misadministration involving the use of radioactive material; and,

(XIII) Properly implementing emergency procedures and

(iii) Has obtained written attestation, signed by a preceptor authorized user that the individual has satisfactorily completed the requirements of this section and has achieved a level of competency sufficient to independently function as a radiation therapist.

(c) Individuals working as nuclear medicine technologists or radiation therapists prior to July 1, 2003 for a facility holding a Department license need not comply with the training requirements of this section.

(d) The licensee shall maintain records of the above training as specified in Rule .05(100).

(26) **Provisions for Experienced Radiation Safety Officer, Teletherapy or Medical Physicist, Authorized Medical Physicist, Authorized User, Nuclear Pharmacist, and Authorized Nuclear Pharmacist.**

(a) 1. An individual identified as a Radiation Safety Officer, a teletherapy or medical physicist, or a nuclear pharmacist on a Department, Nuclear Regulatory Commission or Agreement State license or on a permit issued by a Department, Nuclear Regulatory commission or Agreement State broad scope licensee or master material license permit or by a master material license permittee of broad scope before July 1, 2003, need not comply with the training requirements of Rules .05(22), .05(23), or .05(24), respectively.

2. An individual identified as a Radiation Safety Officer, an authorized medical physicist, or an authorized nuclear pharmacist on a Department, Nuclear Regulatory Commission or Agreement State license or a permit issued by a Department, Nuclear Regulatory Commission or Agreement State broad scope licensee or master material license permit or by a master material license permittee of broad scope between July 1, 2003 and July 1, 2008 need not comply with the training requirements of Rules .05(22), .05(23), or .05(24), respectively.

3. A Radiation Safety Officer, a medical physicist, or a nuclear pharmacist, who used only accelerator-produced radioactive materials, discrete sources of radium-226, or both, for medical uses or in the practice of nuclear pharmacy at a Government agency or Federally recognized Indian Tribe before November 30, 2007 or at all other locations of use before August 8, 2009, or an earlier date as noticed by the NRC, need not comply with the training requirements of Rules .05(22), .05(23) or .05(24), respectively, when performing the same uses. A nuclear pharmacist, who prepared only radioactive drugs containing accelerator-produced radioactive materials, or a medical physicist, who used only accelerator-produced radioactive materials, at the locations and time period identified in this paragraph, qualifies as an authorized nuclear pharmacist or an authorized medical physicist, respectively, for those materials and uses performed before these dates, for purposes of this chapter.

(b) 1. Physicians, dentists, or podiatrists identified as authorized users for the medical use of radioactive material on a license issued by the Department, Nuclear Regulatory Commission or Agreement State, a permit issued by a Department, Nuclear Regulatory Commission master material licensee, a permit issued by a Commission or Agreement State broad scope licensee, or a permit issued by a Commission master material license broad scope permittee before July 1, 2003 who perform only those medical uses for which they were authorized on that date need not comply with the training requirements of Rules .05(43), .05(47), .05(52), .05(53), .05(54), .05(54.1), .05(63). .05(64), .05(66), and .05(84), respectively.

2. Physicians, dentists, or podiatrists identified as authorized users for the medical use of radioactive material on a license issued by the Department, Nuclear Regulatory Commission or Agreement State, a permit issued by a Department, Nuclear Regulatory Commission master material licensee, a permit issued by a Nuclear Regulatory Commission or Agreement State broad scope licensee, or a permit issued by a Nuclear Regulatory Commission master material license broad scope permittee who perform only those medical uses for which they were authorized between July 1, 2003 and July 1, 2008, need not comply with the training requirements of Rules .05(43), .05(47), .05(52), .05(53), .05(54), .05(54.1), .05(63). .05(64), .05(66), and .05(84) respectively.

3. Physicians, dentists, or podiatrists who used only accelerator-produced radioactive materials, discrete sources of radium-226, or both, for medical uses performed at a Government agency or Federally recognized Indian Tribe before November 30, 2007 or at all other locations of use before August 8, 2009, or an earlier date as noticed by the NRC, need not comply with the training requirements of Rules .05(43), .05(47), .05(52), .05(53), .05(54), .05(54.1), .05(63). .05(64), .05(66), and .05(84) respectively, when performing the same medical uses. A physician, dentist, or podiatrist, who used only accelerator-produced radioactive materials, discrete sources of radium-226, or both, for medical uses at the locations and time period identified in this paragraph, qualifies as an authorized user for those materials and uses performed before these dates, for purposes of this chapter.

(c) Individuals who need not comply with training requirements as described in this section may serve as preceptors for, and supervisors of, applicants seeking authorization on the Department

licenses for the same uses for which these individuals are authorized.

(27) **Recentness of Training.** The training and experience specified in Rule .05 must have been obtained within the 7 years preceding the date of application or the individual must have had related continuing education and experience since the required training and experience was completed.

GENERAL TECHNICAL REQUIREMENTS

(28) **Quality Control of Diagnostic Equipment.** Each licensee shall establish written quality control procedures for all diagnostic equipment used for radionuclide studies. As a minimum, quality control procedures and frequencies shall be those recommended by equipment manufacturers or procedures that have been approved by the Department. The licensee shall conduct quality control procedures in accordance with written procedures.

(29) **Possession, Use, and Testing of Instruments to Measure the Activity of Unsealed Radioactive Materials.**

(a) For direct measurements performed in accordance with Rule .05(31), a licensee shall possess and use instrumentation to measure the activity of unsealed radioactive materials prior to administration to each patient or human research subject.

(b) A licensee shall test the instrumentation required in Rule .05(29)(a) in accordance with nationally recognized standards or the manufacturer's instructions.

(c) The tests required in Rule .05(29)(b) shall include tests for constancy, linearity, accuracy and geometry dependence, as appropriate to demonstrate proper operation of the instrument.

(d) A licensee shall retain a record of each instrument test required by Rule .05(29) in accordance with Rule .05(91).

(30) **Calibration of Survey Instruments.**

(a) A licensee shall ensure that the survey instruments used to show compliance with Rule .05 and Rule .03 of this Chapter, have been calibrated before first use, annually, and following any repair that will affect the calibration.

(b) To satisfy the requirements of Rule .05(30)(a), the licensee shall:

1. Calibrate all required scale readings up to 10 millisievert (1,000 mrem) per hour with a radiation source;

2. Have each radiation survey instrument calibrated:

(i) At energies appropriate for use and at intervals not to exceed 12 months or after instrument servicing, except for battery changes;

(ii) For linear scale instruments, at two points located approximately one-third and two-thirds of full-scale on each scale; for logarithmic scale instruments, at mid-range of each decade, and at

two points of at least one decade; and for digital instruments, at 3 points between 0.02 and 10 millisievert (2 and 1,000 mrem) per hour; and

(iii) For dose rate instruments, so that an accuracy within plus or minus 20 percent of the true radiation dose rate can be demonstrated at each point checked; and

3. Conspicuously note on the instrument the date of calibration.

(c) The licensee shall not use survey instruments if the difference between the indicated exposure rate and the calculated exposure rate is greater than 20 percent.

(d) A licensee shall check each survey instrument for consistent response with a dedicated check source before each use. The licensee is not required to keep records of these checks.

(e) The licensee shall retain a record of each survey instrument calibration in accordance with Rule .05(92).

(31) **Determination of Dosages of Radioactive Material for Medical Use.**

(a) A licensee shall determine and record the activity of each dosage prior to medical use.

(b) For a unit dosage, this determination must be made either by direct measurement or by a decay correction, based on the measurement made by a manufacturer or preparer licensed pursuant to Rule .02 of this Chapter or equivalent provisions of the Nuclear Regulatory Commission, Agreement State or Licensing State.

(c) For other than unit dosages, this determination must be made by direct measurement of radioactivity or by a combination of measurements of radioactivity and mathematical calculations or combination of volumetric measurements and mathematical calculations, based on the measurement made by a manufacturer or preparer licensed pursuant to Rule .02 of this Chapter or equivalent provisions of the Nuclear Regulatory Commission, Agreement State or Licensing State.

(d) Unless otherwise directed by the authorized user, a licensee shall not use a dosage if the dosage differs from the prescribed dosage by more than 20 percent.

(e) A licensee shall retain a record of the dosage determination required by Rule .05(31)(a) through (31)(c) in accordance with Rule .05(93).

(32) **Authorization for Calibration, Transmission and Reference Sources.** Any person authorized by Rule .05(7) for medical use of radioactive material may receive, possess, and use the following radioactive material for check, calibration and reference use:

(a) Sealed sources manufactured and distributed by persons specifically licensed pursuant to Rule .02 of this Chapter or equivalent provisions of the Nuclear Regulatory Commission, Agreement State or Licensing State and that do not exceed 1.11 gigabecquerel (30 mCi) each;

(b) Any radioactive material with a half-life of 120 days or less in individual amounts not to exceed 555 megabecquerel (15 mCi);

(c) Any radioactive material with a half-life greater than 120 days in individual amounts not to exceed the smaller of:

1. 7.4 megabecquerel (200 µCi); or

2. 1,000 times the quantities in Schedule B of Rule .02(21)(b) of this Chapter; and

(d) Technetium-99m in amounts as needed.

(33) **Requirements for Possession of Sealed Sources and Brachytherapy Sources.**

(a) A licensee in possession of any sealed source or brachytherapy source shall follow the radiation safety and handling instructions supplied by the manufacturer or equivalent instructions approved by the Department.

(b) A licensee in possession of a sealed source shall:

1. Test the source for leakage in accordance with Rule .03 of this Chapter.

2. Test the source for leakage at intervals not to exceed 6 months or at other intervals approved by the Department, an Agreement State, a Licensing State, or the Nuclear Regulatory Commission in the Sealed Source and Device Registry.

(c) If the leak test reveals the presence of 185 becquerel (0.005 µCi) or more of removable contamination, the licensee shall:

1. Immediately withdraw the sealed source from use and store, dispose, or cause it to be repaired in accordance with the requirements of Rules .02 and .03 of this Chapter; and

2. File a report with the Department within 5 days of receiving the leak test results in accordance with Rule .05(117).

(d) A licensee in possession of a sealed source or brachytherapy source, except for gamma stereotactic radiosurgery sources, shall conduct a semi-annual physical inventory of all such sources. The licensee shall retain each inventory record in accordance with Rule .05(94).

(34) **Labels.** Each syringe and vial that contains a radioactive drug shall be labeled to identify the radioactive drug. Each syringe shield and vial shield shall also be labeled unless the label on the syringe or vial is visible when shielded.

(35) **Vial Shields.** A licensee shall require each individual preparing or handling a vial that contains a radioactive drug to keep the vial in a vial radiation shield.

(36) **Surveys for Ambient Radiation Dose Rate and Contamination.**

(a) Except as provided in Rule .05(36)(h), a licensee shall survey with a radiation detection survey instrument at the end of each day of use all areas where radioactive drugs containing radioactive material requiring a written directive were prepared for use or administered.

(b) A licensee shall survey with a radiation detection survey instrument at least once each week all areas where radioactive drugs or radioactive wastes are stored.

(c) A licensee shall conduct the surveys required by Rule .05(36)(a) and (b) so as to be able to measure dose rates as low as 1 microsievert (0.1 mrem) per hour.

(d) A licensee shall establish dose rate action levels for the surveys required by Rule .05(36)(a) and (36)(b) and shall require that the individual performing the survey immediately notify the Radiation Safety Officer if a dose rate exceeds an action level.

(e) A licensee shall survey for removable contamination each day of use all areas where generators and bulk radioactive drugs are prepared for use or administered and each week where radioactive materials are stored.

(f) A licensee shall conduct the surveys required by Rule .05(36)(e) so as to be able to detect contamination on each wipe sample of 33.3 becquerel (2,000 dpm).

(g) A licensee shall establish removable contamination action levels for the surveys required by Rule .05(36)(e) and shall require that the individual performing the survey immediately notify the Radiation Safety Officer if contamination exceeds action levels.

(h) A licensee does not need to perform the surveys required by Rule .05(36)(a) in area(s) where patients or human research subjects are confined when they cannot be released pursuant to Rule .05(37).

(i) A licensee shall retain a record of each survey in accordance with Rule .05(95)

(37) **Release of Individuals Containing Radioactive Drugs or Implants.**

(a) A licensee may authorize the release of any individual who has been administered radioactive drugs or implants containing radioactive material if the total effective dose equivalent to any other individual from exposure to the released individual is not likely to exceed 5 mSv (0.5 rem).

(b) For patients administered radioactive material for which a written directive is required, a licensee shall provide the released individual, or the individual's parent or guardian, with instructions, including oral and written instructions, on actions recommended to maintain doses to other individuals as low as is reasonably achievable. If a breast-feeding infant or child could receive a radiation dose as a result of the release of the patient, the instructions shall also include:

1. Guidance on the interruption or discontinuation of breast-feeding; and

2. Information on the potential consequences, if any, of failure to follow the guidance.

(c) Release of the patient must be approved by an individual listed as an authorized user on the Department license, and who is approved for the type of radioactive material use for which the patient being released has received.

(d) The licensee shall maintain a record of the basis for authorizing the release of an individual in accordance with Rule .05(96).

(e) The licensee shall maintain a record of instructions provided to breast- feeding women in accordance with Rule .05(96).

(f) Notwithstanding Rule .05(37)(a), the licensee may be held responsible for the proper disposal of any individual's radioactive waste discovered in a solid waste stream that can be traced to the licensee.

(g) The licensee shall immediately notify the Department in accordance with Rule .05(118) if a patient departs prior to an authorized release.

(h) The licensee shall notify the Department in accordance with Rule .05(119):

1. When they are aware that a patient containing radioactive material and who has been released in accordance with Rule .05(37) dies; and,

2. If it is possible that any individual could receive exposures in excess of 5 millisievert (500 mrem) as a result of the deceased's body.

(38) **Mobile Medical Service Technical Requirements.** A licensee providing mobile medical service shall:

(a) Transport to each client's address only syringes or vials containing prepared drugs or radioactive materials that are intended for reconstitution of radioactive drug kits;

(b) Bring into each client's address all radioactive material to be used and, before leaving, remove all unused radioactive material and associated radioactive waste;

(c) Secure or keep under constant surveillance and immediate control all radioactive material when in transit or at a client's address;

(d) Check instruments used to measure the activity of unsealed radioactive material for proper function before medical use at each client's address or on each day of use, whichever is more frequent. At a minimum, the check for proper function shall include a constancy check;

(e) Check survey instruments for consistent response with a dedicated check source before use at each client's address;

(f) Prior to leaving a client's address, perform area surveys and survey for removable contamination in all areas of use, to ensure compliance with Rule .03 of this Chapter;

(g) Use radioactive gases only in areas of use and under conditions which have been evaluated and approved by the Department for compliance with airborne release standards; and,

(h) Retain a record of each survey required by Rule .05(38)(f) in accordance with Rule .05(97)(b).

(39) **Storage and Control of Volatiles and Gases.**

(a) A licensee shall store volatile radioactive materials and radioactive gases in the shippers' radiation shield and container.

(b) A licensee shall store and use a multi-dose container in a properly functioning fume hood.

(c) A licensee who administers radioactive aerosols or gases shall do so with a system that will keep airborne concentrations within the limits prescribed in Rule .03 of this Chapter.

(d) The system shall either be directly vented to the atmosphere through an air exhaust or provide for collection and decay or disposal of the aerosol or gas in a shielded container.

(e) A licensee shall check the operation of collection systems monthly. Records of these checks shall be maintained for 3 years.

(40) **Decay-in-Storage.**

(a) A licensee may hold radioactive material with a physical half-life of less than 120 days for decay-in-storage before disposal without regard to its radioactivity if the licensee:

1. Monitors radioactive material at the container surface before disposal and determines that its radioactivity cannot be distinguished from the background radiation level with an appropriate radiation detection survey instrument set on its most sensitive scale and with no interposed shielding;

2. Removes or obliterates all radiation labels, except for material that will be handled as biomedical waste after release; and

3. Separates and monitors each generator column individually with all radiation shielding removed to ensure that its contents have decayed to background radiation level before disposal.

(b) For radioactive material disposed in accordance with (40)(a) of this section, the licensee shall retain a record of each disposal in accordance with Rule .05(98).

SPECIFIC REQUIREMENTS FOR THE USE OF RADIOACTIVE MATERIAL WRITTEN DIRECTIVE NOT REQUIRED

(41) **Use of Unsealed Radioactive Material for Uptake, Dilution, or Excretion Studies for which a Written Directive is Not Required.** A licensee may use any unsealed radioactive material, in quantities that do not require a written directive, for a diagnostic use involving measurements of uptake, dilution, or excretion that is:

(a) Obtained from a manufacturer or preparer licensed pursuant to Rule .02 of this Chapter or equivalent regulations of another Agreement State, a Licensing State, or the Nuclear Regulatory Commission; or

(b) Excluding production of PET radionuclides, prepared by an authorized nuclear pharmacist,

a physician who is an authorized user and who meets the requirements specified in Rule .05(47) or .05(52) and .05(47)(c)1.(ii)(VII), or an individual under the supervision of either as specified in Rule .05(18); or

(c) Obtained from and prepared by a Department, Nuclear Regulatory Commission, Agreement State or Licensing State licensee for use in research in accordance with a Radioactive Drug Research Committee-approved protocol or an Investigational New Drug (IND) protocol accepted by FDA; or

(d) Prepared by the licensee in accordance with a Radioactive Drug Research Committee-approved application or an Investigational New Drug (IND) protocol accepted by FDA for use in research.

(42) **Possession of Survey Instrument.** A licensee authorized to use radioactive material for uptake, dilution, and excretion studies shall possess a portable radiation detection survey instrument capable of detecting dose rates over the range 1 microsievert (0.1 mrem) per hour to 500 microsievert (50 mrem) per hour. The instrument shall be operable and calibrated in accordance with Rule .05(30).

(43) **Training for Uptake, Dilution, and Excretion Studies.** Except as provided in Rule .05(26), the licensee shall require an authorized user of a unsealed radioactive material for the uses authorized under Rule .05(41) to be a physician who:

(a) Is certified by a medical specialty board whose certification process has been recognized by the Department, Nuclear Regulatory Commission or an Agreement State and who meets the requirements in Rule .05(43)(c)(2). (The names of board certifications that have been recognized by the Commission or an Agreement State will be posted on the NRC's Web page.) To have its certification process recognized, a specialty board shall require all candidates for certification to:

1. Complete 60 hours of training and experience in basic radionuclide handling techniques and radiation safety applicable to the medical use of unsealed radioactive material for uptake, dilution, and excretion studies as described in Rule .05(43)(c)1.(i) through .05(43)(c)1.(ii)(VI); and

2. Pass an examination, administered by diplomates of the specialty board, that assesses knowledge and competence in radiation safety, radionuclide handling, and quality control; or

(b) Is an authorized user under Rule .05(47) or .05(52) or equivalent Agreement State, Licensing State or Nuclear Regulatory Commission requirements; or

(c) 1. Has completed 60 hours of training and experience, including a minimum of 8 hours of classroom and laboratory training, in basic radionuclide handling techniques applicable to the medical use of unsealed radioactive material for uptake, dilution, and excretion studies that includes:

(i) Classroom and laboratory training in the following areas:

(I) Radiation physics and instrumentation;

(II) Radiation protection;

(III) Mathematics pertaining to the use and measurement of radioactivity;

(IV) Chemistry of radioactive material for medical use; and

(V) Radiation biology; and

(ii) Work experience, under the supervision of an authorized user who meets the requirements in Rules .05(26), (43), (47) or (52) or equivalent Agreement State, Licensing State or Nuclear Regulatory Commission requirements, involving:

(I) Ordering, receiving, and unpacking radioactive materials safely and performing the related radiation surveys;

(II) Performing quality control procedures on instruments used to determine the activity of dosages and performing checks for proper operation of survey meters;

(III) Calculating, measuring, and safely preparing patient or human research subject dosages;

(IV) Using administrative controls to prevent a medical event involving the use of unsealed radioactive material;

(V) Using procedures to contain spilled radioactive material safely and using proper decontamination procedures; and

(VI) Administering dosages to patients or human research subjects; and

2. Has obtained written attestation, signed by a preceptor authorized user, who meets the requirements in Rules .05(26), (43), (47), or (52), or equivalent Agreement State, Licensing State or Nuclear Regulatory Commission requirements, that the individual has satisfactorily completed the requirements in Rule .05(43)(a)1. or (c)1. and has achieved a level of competency sufficient to independently function as an authorized user for the medical uses authorized under Rule .05(41).

(44) **Use of Unsealed Radioactive Material for Imaging and Localization Studies for Which a Written Directive is Not Required.** A licensee may use, for imaging and localization studies, any radioactive material (except aerosol or gaseous forms) prepared for medical use, in quantities that do not require a written directive as described in Rule .05(19) that is:

(a) Obtained from a manufacturer or preparer licensed pursuant to Rule .02 of this Chapter or equivalent regulations of another Agreement State, a Licensing State, or the Nuclear Regulatory Commission; or

(b) Excluding production of PET radionuclides, prepared by an authorized nuclear pharmacist, a physician who is an authorized user and who meets the requirements specified in Rule .05(47) or .05(52) and .05(47)(c)1.(ii)(VII), or an individual under the supervision of either as specified in Rule .05(18); or

(c) Obtained from and prepared by a Department, Nuclear Regulatory Commission, Agreement

State or Licensing State licensee for use in research in accordance with a Radioactive Drug Research Committee- approved protocol or an Investigational New Drug (IND) protocol accepted by FDA; or

(d) Prepared by the licensee in accordance with a Radioactive Drug Research Committee-approved application or an Investigational New Drug (IND) protocol accepted by FDA, or

(e) Provided the conditions of Rule .05(39) are met, a licensee shall use radioactive aerosols or gases only if specific application is made to and approved by the Department.

(45) **Permissible molybdenum-99, strontium-82, and strontium-85 concentrations.**

(a) A licensee shall not administer to humans a radioactive drug containing:

1. More than 0.15 kilobecquerel of molybdenum-99 per megabecquerel of technetium-99m (0.15 µCi of Mo-99 per mCi of Tc-99m); or

2. More than 0.02 kilobecquerel of strontium-82 per megabecquerel of rubidium-82 chloride injection (0.02 µCi of Sr-82 per mCi of Rb-82 chloride); or

3. More than 0.2 kilobecquerel of strontium-85 per megabecquerel of rubidium-82 chloride injection (0.2 µCi of Sr-85 per mCi of Rb-82);

(b) To demonstrate compliance with Rule .05(45)(a), the licensee preparing radioactive drugs from radionuclide generators shall:

1. Measure the concentration of radionuclide contaminant in the first eluate after receipt of a molybdenum-99/technetium-99m generator;

2. Measure the concentration of radionuclide contaminant in each eluate or extract, as appropriate for other generator systems.

(c) A licensee who must measure radionuclide contaminant concentration shall retain a record of each measurement in accordance with Rule .05(99).

(d) A licensee shall report immediately to the Department each occurrence of radionuclide contaminant concentration exceeding the limits specified in Rule .05(45)(a).

(46) **Possession of Survey Instruments.** A licensee authorized to use radioactive material for imaging and localization studies shall possess a portable radiation detection survey instrument capable of detecting dose rates over the range of 1 microsievert (0.1 mrem) per hour to 500 microsievert (50 mrem) per hour, and a portable radiation measurement survey instrument capable of measuring dose rates over the range 10 microsievert (1 mrem) per hour to 10 millisievert (1,000 mrem) per hour. The instruments shall be operable and calibrated in accordance with Rule .05(30).

(47) **Training for Imaging and Localization Studies.** Except as provided in Rule .05(26), the licensee shall require an authorized user of unsealed radioactive material for the uses authorized under Rule .05(44) to be a physician who:

(a) Is certified by a medical specialty board whose certification process has been recognized by the Department, Nuclear Regulatory Commission or an Agreement State, and who meets the requirements in Rule .05(47)(c)2. (The names of board certifications that have been recognized by the Nuclear Regulatory Commission or an Agreement State will be posted on the NRC's Web page.) To have its certification process recognized, a specialty board shall require all candidates for certification to:

1. Complete 700 hours of training and experience in basic radionuclide handling techniques and radiation safety applicable to the medical use of unsealed radioactive material for imaging and localization studies as described in (c)1.(i) through (c)1.(ii)(VII) of this rule; and

2. Pass an examination, administered by diplomates of the specialty board, which assesses knowledge and competence in radiation safety, radionuclide handling, and quality control; or

(b) Is listed as an authorized user under Rule .05(52) and meets the requirements in .05(47)(c)1.(ii)(VII) or equivalent Agreement State, Licensing State or Nuclear Regulatory Commission requirements; or

(c) 1. Has completed 700 hours of training and experience, including a minimum of 80 hours of classroom and laboratory training, in basic radionuclide handling techniques applicable to the medical use of unsealed radioactive material for imaging and localization studies that includes, at a minimum:

(i) Classroom and laboratory training in the following areas:

(I) Radiation physics and instrumentation;

(II) Radiation protection;

(III) Mathematics pertaining to the use and measurement of radioactivity;

(IV) Chemistry of radioactive material for medical use;

(V) Radiation biology; and

(ii) Work experience, under the supervision of an authorized user, who meets the requirements in Rule .05(26), .05(47) or .05(47)(c)1.(ii)(VII) and Rule .05(52), or equivalent Agreement State, Licensing State or Nuclear Regulatory Commission requirements, involving:

(I) Ordering, receiving, and unpacking radioactive materials safely and performing the related radiation surveys;

(II) Performing quality control procedures on instruments used to determine the activity of dosages and performing checks for proper operation of survey meters;

(III) Calculating, measuring, and safely preparing patient or human research subject dosages;

(IV) Using administrative controls to prevent a medical event involving the use of unsealed radioactive material;

(V) Using procedures to contain spilled radioactive material safely and using proper decontamination procedures;

(VI) Administering dosages to patients or human research subjects; and

(VII) Eluting generator systems appropriate for preparation of radioactive drugs for imaging and localization studies, measuring and testing the eluate for radiochemical purity, and processing the eluate with reagent kits to prepare labeled radioactive drugs; and

2. Has obtained written attestation, signed by a preceptor authorized user, who meets the requirements in Rules .05(26), .05(47) or .05(52) and .05(47)(c)1.(ii)(VII), or equivalent Agreement State, Licensing State or Nuclear Regulatory Commission requirements, that the individual has satisfactorily completed the requirements in Rule .05(47)(a)1. or .05(47)(c)1. and has achieved a level of competency sufficient to independently function as an authorized user for the medical uses authorized under Rules .05(41) and .05(44).

SPECIFIC REQUIREMENTS FOR THE USE OF UNSEALED RADIOACTIVE MATERIAL WRITTEN DIRECTIVE REQUIRED

(48) **Use of Unsealed Radioactive Material for Which a Written Directive is Required.** A licensee may use any unsealed radioactive material for diagnostic or therapeutic medical use for which a written directive is required that has been:

(a) Obtained from a manufacturer or preparer licensed pursuant to Rule .02 of this Chapter or equivalent regulations of another Agreement State, a Licensing State, or the Nuclear Regulatory Commission; or

(b) Excluding production of PET radionuclides, prepared by an authorized nuclear pharmacist, a physician who is an authorized user and who meets the requirements specified in Rule .05(47) or (52), or an individual under the supervision of either as specified in Rule .05(26); or

(c) Obtained from and prepared by the Department, Nuclear Regulatory Commission, Agreement State, or Licensing State licensee in accordance with a Radioactive Drug Research Committee-approved protocol or an Investigational New Drug (IND) protocol accepted by the FDA for use in research; or

(d) Prepared by the licensee in accordance with a Radioactive Drug Research Committee-approved application or an IND protocol accepted by FDA for use in research.

(49) **Safety Instruction.** In addition to the requirements of Rule .07(3) of this Chapter:

(a) A licensee shall provide radiation safety instruction to personnel caring for patients or human research subjects that have received therapy with a radioactive drug, and cannot be released in accordance with Rule .05(37). The training must be provided initially and at least annually. The instruction must be appropriate to the personnel's assigned duties and include the following:

1. Patient or human research subject control;

2. Visitor control to include the following:

(i) Routine visitation to hospitalized individuals in accordance with Rule .03 of this Chapter;

(ii) Contamination control;

(iii) Waste control; and

(iv) Notification of the RSO, or his or her designee, and the authorized user if the patient or the human research subject dies or has a medical emergency.

(b) A licensee shall retain a record of individuals receiving instruction in accordance with Rule .05(101).

(50) **Safety Precautions.**

(a) For each patient or human research subject receiving radiopharmaceutical therapy and hospitalized for compliance with Rule .05(37), a licensee shall:

1. Quarter the patient or the human research subject either in:

(i) A private room with a private sanitary facility; or

(ii) A room, with a private sanitary facility, with another individual who also has received radiopharmaceutical therapy and who cannot be released in accordance with Rule .05(37); and,

2. Visibly post the patient's or the human research subject's room with a "Radioactive Materials" sign and note on the door or in the patient's or human research subject's chart where and how long visitors may stay in the patient's or the human research subject's room; and

3. Either monitor material and items removed from the patient's or the human research subject's room to determine that their radioactivity cannot be distinguished from the natural background radiation level with a radiation detection survey instrument set on its most sensitive scale and with no interposed shielding, or handle such material and items as radioactive waste.

(b) The Radiation Safety Officer, or his designee, and the authorized user shall be notified immediately if the hospitalized patient dies or has a medical emergency. The licensee shall also notify the Department in accordance with Rule .05(119) if it is possible that any individual could receive exposures in excess of the limits in Rule .03(5)(i) of this Chapter as a result of the deceased's body.

(51) **Possession of Survey Instruments.** A licensee authorized to use radioactive material for which a written directive is required shall possess a portable radiation detection survey instrument capable of detecting dose rates over the range of 1 microsievert (0.1 mrem) per hour to 500 microsievert (50 mrem) per hour, and a portable radiation measurement survey instrument capable of measuring dose rates over the range 10 microsievert (1 mrem) per hour to 10 millisievert (1,000 mrem) per hour. The instruments shall be operable and calibrated in accordance with Rule .05(30).

(52) **Training for Use of Unsealed Radioactive Material for Which a Written Directive is Required.** Except as provided in Rule .05(26), the licensee shall require an authorized user of

radioactive material for the uses authorized under Rule .05(48) to be a physician who:

(a) Is certified by a medical specialty board whose certification process has been recognized by the Department, Nuclear Regulatory Commission or an Agreement State, and who meets the requirements of Rules .05(52)(b)1(ii)(VII). and .05(52)(b)2. (Specialty boards whose certification processes have been recognized by the Nuclear Regulatory Commission or an Agreement State will be posted on the NRC's Web page.) To be recognized, a specialty board shall require all candidates for certification to:

1. Successfully complete residency training in a radiation therapy or nuclear medicine training program or a program in a related medical specialty. These residency training programs must include 700 hours of training and experience as described in Rule .05(52)(b)1.(i) through .05(52)(b)1.(ii)(V). Eligible training programs must be approved by the Residency Review Committee of the Accreditation Council for Graduate Medical Education, the Royal College of Physicians and Surgeons of Canada, or the Committee on Post-Graduate Training of the American Osteopathic Association; and

2. Pass an examination, administered by diplomates of the specialty board, which tests knowledge and competence in radiation safety, radionuclide handling, quality assurance, and clinical use of unsealed radioactive material for which a written directive is required; or

(b) 1. Has completed 700 hours of training and experience, including a minimum of 200 hours of classroom and laboratory training, in basic radionuclide handling techniques applicable to the medical use of unsealed radioactive material requiring a written directive that includes:

(i) Classroom and laboratory training in the following areas:

(I) Radiation physics and instrumentation;

(II) Radiation protection;

(III) Mathematics pertaining to the use and measurement of radioactivity;

(IV) Chemistry of radioactive material for medical use; and

(V) Radiation biology; and

(ii) Work experience, under the supervision of an authorized user who meets the requirements in Rule .05(26), .05(52) or equivalent Agreement State, or Nuclear Regulatory Commission requirements. A supervising authorized user, who meets the requirements of Rule .05(52)(b) must have experience in administering dosages in the same dosage category or categories listed in Rule .05(52)(b)1.(ii)(VII) as the individual requesting authorized user status. The work experience must involve:

(I) Ordering, receiving, and unpacking radioactive materials safely and performing the related radiation surveys;

(II) Performing quality control procedures on instruments used to determine the activity of dosages, and performing checks for proper operation of survey meters;

(III) Calculating, measuring, and safely preparing patient or human research subject dosages;

(IV) Using administrative controls to prevent a medical event involving the use of unsealed radioactive material;

(V) Using procedures to contain spilled radioactive material safely and using proper decontamination procedures.

(VI) Reserved.

(VII) Administering dosages of radioactive drugs to patients or human research subjects involving a minimum of 3 cases in each of the following categories for which the individual is requesting authorized user status. This experience may be obtained concurrently with the supervised work experience required by Rule .05(52)(b)1.(ii):

(i) Oral administration of less than or equal to 1.22 gigabecquerel (33 millicurie) of sodium iodide I-131, for which a written directive is required;

(ii) Oral administration of greater than 1.22 gigabecquerel (33 millicurie) of sodium iodide I-131[2];

(iii) Parenteral administration of any beta emitter or a photon- emitting radionuclide with a photon energy less than 150 keV, for which a written directive is required; and/or

(iv) Parenteral administration of any other radionuclide, for which a written directive is required; and

2. Has obtained written attestation that the individual has satisfactorily completed the requirements in Rules .05(52)(a)1. And .05(52)(b)1.(ii)(VII) or .05(52)(b)1., and has achieved a level of competency sufficient to function independently as an authorized user for the medical uses authorized under Rule .05(48). The written attestation must be signed by a preceptor authorized user who meets the requirements in Rule .05(26), .05(52) or equivalent Agreement State, or Nuclear Regulatory Commission requirements. The preceptor authorized user, who meets the requirements in Rule .05(52)(b). must have experience in administering dosages in the same dosage category or categories (i.e., in Rule .05(52)(b)1.(ii)(VII)) as the individual requesting authorized user status.

(53) **Training for the Oral Administration of Sodium Iodide I-131 in Quantities Less than or Equal to 1.22 Gigabecquerel (33 millicurie) for which a Written Directive is Required.** Except as provided in Rule .05(26), the licensee shall require an authorized user for the oral administration of sodium iodide I-131 in quantities less than or equal to 1.22 gigabecquerel (33 millicurie), for which a written directive is required, to be a physician who:

(a) Is certified by a medical specialty board whose certification process includes all of the requirements in .05(53)(c)1. and .05(53)(c)2. and whose certification has been recognized by the Department, an Agreement State or the Nuclear Regulatory Commission and who meets the requirements in .05(53)(c)3. (The names of board certifications that have been recognized by the Nuclear Regulatory Commission or an Agreement State will be posted on the NRC's

2 Experience with at least 3 cases in category (VII)(ii) also satisfies the requirement in category (VII)(i).

Web page.); or

(b) Is an authorized user under Rule (52) for uses listed in (52)(b)1.(ii)(VII)(i) or (ii), or (54), or equivalent Agreement State or Nuclear Regulatory Commission requirements; or

(c) 1. Has successfully completed 80 hours classroom and laboratory training, applicable to the medical use of sodium iodide I-131 for procedures requiring a written directive; the training must include:

(i) Radiation physics and instrumentation;

(ii) Radiation protection;

(iii) Mathematics pertaining to the use and measurement of radioactivity;

(iv) Chemistry of radioactive material for medical use; and

(v) Radiation biology; and

2. Has work experience, under the supervision of an authorized user who meets the requirements in Rule .05(26), (52), (53) or (54), or equivalent Agreement State, Licensing State or Nuclear Regulatory Commission requirements. A supervising authorized user, who meets the requirements of Rule .05(52)(b) must have experience in administering dosages as specified in Rule .05(52)(b)1.(ii)(VII)(i) or (ii); the work experience must involve:

(i) Ordering, receiving, and unpacking radioactive materials safely and performing the related radiation surveys;

(ii) Performing quality control procedures on instruments used to determine the activity of dosages and performing checks for proper operation for survey meters;

(iii) Calculating, measuring, and safely preparing patient or human research subject dosages;

(iv) Using administrative controls to prevent a misadministration involving the use of radioactive material;

(v) Using procedures to contain spilled radioactive material safely and using proper decontamination procedures; and

(vi) Administering dosages to patients or human research subjects that includes at least 3 cases involving the oral administration of less than or equal to 1.22 gigabecquerel (33 millicurie) of sodium iodide I-131; and

3. Has obtained written attestation that the individual has satisfactorily completed the requirements in Rule .05(53)(c)1. and (53)(c)2. and has achieved a level of competency sufficient to independently function as an authorized user for medical uses authorized under .05(48). The written attestation must be signed by a preceptor authorized user, who meets the requirements in Rules .05(52), .05(26), .05(53) or .05(54), or equivalent Agreement State, Licensing State or Nuclear Regulatory Commission requirements. The preceptor authorized user, who meets the requirements of Rule .05(52)(b), must have experience in administering

dosages as specified in Rule .05(52)(b)1.(ii)(VII)(i) or (52)(b)1.(ii)(VII)(ii).

(54) **Training for the Oral Administration of Sodium Iodide I-131 in Quantities Greater than 1.22 Gigabecquerel (33 millicurie) for which a Written Directive is Required.** Except as provided in Rule .05(26), the licensee shall require an authorized user for the oral administration of sodium iodide I-131 in quantities greater than 1.22 gigabecquerel (33 millicurie), to be a physician who:

(a) Is certified by a medical specialty board whose certification process includes all of the requirements in Rules .05(54)(c)1. and .05(54)(c)2. and whose certification has been recognized by the Department, an Agreement State or the Nuclear Regulatory Commission and who meets the requirements in Rule .05(54)(c)3. (The names of board certifications that have been recognized by the Nuclear Regulatory Commission or an Agreement State will be posted on the NRC's Web page.); or

(b) Is an authorized user under Rule .05(52) for uses listed in Rule.05(52)(b)1.(ii)(VII)(ii), or equivalent Agreement State or Nuclear Regulatory Commission requirements; or

(c) 1. Has successfully completed 80 hours classroom and laboratory training, applicable to the medical use of sodium iodide I-131 for procedures requiring a written directive; the training must include:

(i) Radiation physics and instrumentation;

(ii) Radiation protection;

(iii) Mathematics pertaining to the use and measurement of radioactivity;

(iv) Chemistry of radioactive material for medical use; and

(v) Radiation biology; and

2. Has work experience, under the supervision of an authorized user who meets the requirements in Rule .05(26), (52), or (54), or equivalent Agreement State, Licensing State or Nuclear Regulatory Commission requirements. A supervising authorized user, who meets the requirements of Rule .05(52)(b), must have experience in administering dosages as specified in Rule .05(52)(b)1.(ii)(VII)(ii); the work experience must involve:

(i) Ordering, receiving, and unpacking radioactive materials safely and performing the related radiation surveys;

(ii) Performing quality control procedures on instruments used to determine the activity of dosages and performing checks for proper operation for survey meters;

(iii) Calculating, measuring, and safely preparing patient or human research subject dosages;

(iv) Using administrative controls to prevent a misadministration involving the use of radioactive material;

(v) Using procedures to contain spilled radioactive material safely and using proper

decontamination procedures; and

(vi) Administering dosages to patients or human research subjects that includes at least 3 cases involving the oral administration of greater than 1.22 gigabecquerel (33 millicurie) of sodium iodide I-131; and

3. Has obtained written attestation that the individual has satisfactorily completed the requirements in Rule .05(54)(c)1. and .05(54)(c)2. and has achieved a level of competency sufficient to independently function as an authorized user for medical uses authorized under Rule .05(48). The written attestation must be signed by a preceptor authorized user, who meets the requirements in Rule .05(26), .05(52), or .05(54), or equivalent Agreement State Licensing State or Nuclear Regulatory Commission requirements. The preceptor authorized user, who meets the requirements of Rule .05(52)(b), must have experience in administering dosages as specified in Rule .05(52)(b)1.(ii)(VII)(ii).

(54.1) Except as provided in Rule .05(26) the licensee shall require an authorized user for the parenteral administration requiring a written directive, to be a physician who:

(a) Is an authorized user under Rule .05(52) for uses listed in 05(52)(b)1.(ii)(VII)(iii) or .05(52)(b)1.(ii)(VII)(iv), or equivalent Agreement State or Nuclear Regulatory Commission requirements; or

(b) Is an authorized user under Rules .05(63), .05(84), or equivalent Agreement State or Nuclear Regulatory Commission requirements and who meets the requirements in .05(54.1)(d); or

(c) Is certified by a medical specialty board whose certification process has been recognized by the Department, Nuclear Regulatory Commission or an Agreement State under Rules .05(63) or .05(84), and who meets the requirements in paragraph .05(54.1)(d).

(d) 1. Has successfully completed 80 hours of classroom and laboratory training, applicable to parenteral administrations, for which a written directive is required, of any beta emitter, or any photon-emitting radionuclide with a photon energy less than 150 keV, and/or parenteral administration of any other radionuclide for which a written directive is required. The training must include:

(i) Radiation physics and instrumentation;

(ii) Radiation protection;

(iii) Mathematics pertaining to the use and measurement of radioactivity;

(iv) Chemistry of byproduct material for medical use; and

(v) Radiation biology; and

2. Has work experience, under the supervision of an authorized user who meets the requirements in Rules .05(26), .05(52), .05(54.1) or equivalent Agreement State or Nuclear Regulatory Commission requirements, in the parenteral administration, for which a written directive is required, of any beta emitter, or any photon-emitting radionuclide with a photon energy less than 150 keV, and/or parenteral administration of any other radionuclide for which a written directive is required. A supervising authorized user who meets the requirements in Rule

.05(52) must have experience in administering dosages as specified in 05(52)(b)1.(ii)(VII)(iii) or .05(52)(b)1.(ii)(VII)(iv). The work experience must involve:

(i) Ordering, receiving, and unpacking radioactive materials safely, and performing the related radiation surveys;

(ii) Performing quality control procedures on instruments used to determine the activity of dosages, and performing checks for proper operation of survey meters;

(iii) Calculating, measuring, and safely preparing patient or human research subject dosages;

(iv) Using administrative controls to prevent a medical event involving the use of unsealed byproduct material;

(v) Using procedures to contain spilled byproduct material safely, and using proper decontamination procedures; and

(vi) Administering dosages to patients or human research subjects, that include at least 3 cases involving the parenteral administration, for which a written directive is required, of any beta emitter, or any photon-emitting radionuclide with a photon energy less than 150 keV and/or at least 3 cases involving the parenteral administration of any other radionuclide, for which a written directive is required; and

3. Has obtained written attestation that the individual has satisfactorily completed the requirements in .05(54.1)(b) or .05(54.1)(c), and has achieved a level of competency sufficient to function independently as an authorized user for the parenteral administration of unsealed radioactive material requiring a written directive. The written attestation must be signed by a preceptor authorized user who meets the requirements in Rules .05(26), .05(52), .05(54.1), or equivalent Agreement State or Nuclear Regulatory Commission requirements. A preceptor authorized user, who meets the requirements in .05(52), must have experience in administering dosages as specified in 05(52)(b)1.(ii)(VII)(iii) or .05(52)(b)1.(ii)(VII)(iv).

Manual Brachytherapy

(55) **Use of Sealed Sources for Manual Brachytherapy.** A licensee shall use only brachytherapy sources for therapeutic medical uses:

(a) As approved in the Sealed Source and Device Registry; or

(b) In research in accordance with an effective Investigational Device Exemption (IDE) application accepted by the FDA provided the requirements of Rule .05(21)(a) are met.

(56) **Surveys After Source Implant and Removal.**

(a) Immediately after implanting sources in a patient or a human research subject, the licensee shall perform a survey to locate and account for all sources that have not been implanted.

(b) Immediately after removing the last temporary implant source from a patient or a human research subject, the licensee shall make a survey of the patient or the human research subject with a radiation detection survey instrument to confirm that all sources have been removed.

(c) A licensee shall retain a record of the surveys in accordance with Rule .05(102).

(57) **Brachytherapy Sources Inventory.**

(a) A licensee shall maintain accountability at all times for all brachytherapy sources in storage or use.

(b) Promptly after removing sources from a patient or a human research subject, a licensee shall return brachytherapy sources to a secure storage area.

(c) A licensee shall maintain a record of the brachytherapy source accountability in accordance with Rule .05(103).

(58) **Safety Instruction.** In addition to the requirements of Rule .07(3) of this Chapter:

(a) The licensee shall provide radiation safety instruction, initially and at least annually, to personnel caring for patients or human research subjects that are undergoing implant therapy and cannot be released in accordance with Rule .05(37). Instruction must be commensurate with the duties of the personnel and shall include the following:

1. Size and appearance of the brachytherapy sources;

2. Safe handling and shielding instructions;

3. Patient or human research subject control;

4. Visitor control, including both:

(i) Routine visitation of hospitalized individuals in accordance with Rule .03(5)(i)1.(i) of this Chapter; and

(i) Visitation authorized in accordance with Rule .03(5)(i)2. of this Chapter; and

5. Notification of the Radiation Safety Officer, or his or her designee, and an authorized user if the patient or the human research subject dies or has a medical emergency. The licensee shall also notify the Department in accordance with Rule .05(119) if it is possible for any individual to receive exposures in excess of 5 millisievert (500 mrem) as a result of the deceased's body.

(b) A licensee shall retain a record of individuals receiving instruction in accordance with Rule .05(101).

(59) **Safety Precautions for Patients or Human Research Subjects Receiving Brachytherapy.**

(a) For each patient or human research subject that is receiving brachytherapy and cannot be released in accordance with Rule .05(37), a licensee shall:

1. Not place the patient or human research subject in the same room as an individual who is not receiving brachytherapy;

2. Visibly post the patient's or human research subject's room with a "Radioactive Materials" sign and note on the door or in the patient's or human research subject's chart where and how long visitors may stay in the patient's or human research subject's room.

(b) A licensee shall have emergency response equipment available near each treatment room to respond to a source that inadvertently becomes:

1. Dislodged from the patient; or

2. Lodged within the patient following removal of the source applicators.

(c) Radiation Safety Officer, or his designee, and the authorized user shall be notified immediately if the hospitalized patient or human research subject dies or has a medical emergency.

(60) **Calibration Measurements of Brachytherapy Sealed Sources.**

(a) Prior to the first medical use of a brachytherapy sealed source on or after July 1, 2003, a licensee shall perform the following:

1. Determine the source output or activity using a dosimetry system that meets the requirements of Rule .05(72)(a);

2. Determine source positioning accuracy within applicators; and

3. Use published protocols accepted by nationally recognized bodies to meet the requirements of Rule .05(60)(a)1.and .05(60)(a)2.

(b) A licensee may use measurements provided by the source manufacturer or by a calibration laboratory accredited by the American Association of Physicists in Medicine that are made in accordance with Rule .05(60)(a).

(c) A licensee shall mathematically correct the outputs or activities determined in Rule .05(60)(a) of this section for physical decay at intervals consistent with 1.0 percent physical decay.

(d) An authorized medical physicist shall perform or review the calculation measurements made pursuant to Rule .05(60)(a), (60)(b), or (60)(c).

(e) Only an authorized medical physicist shall calculate the activity of each strontium-90 source that is used to determine the treatment times for ophthalmic treatments. The decay must be based on the activity determined in accordance with Rule .05(60)(a), (60)(b), and (60)(c).

(f) A licensee shall retain a record of each calibration in accordance with Rule .05(104).

(g) A licensee shall retain a record of decay calculations required by Rule .05(60)(e) in accordance with Rule .05(105).

(61) **Therapy-related Computer Systems.** The licensee shall perform acceptance testing on

the treatment planning system in accordance with published protocols accepted by nationally recognized bodies. At a minimum, the acceptance testing must include, as applicable, verification of:

(a) The source-specific input parameters required by the dose calculation algorithm;

(b) The accuracy of dose, dwell time, and treatment time calculations at representative points;

(c) The accuracy of isodose plots and graphic displays; and

(d) The accuracy of the software used to determine radioactive source positions from radiographic images.

(62) **Possession of Survey Instruments.** A licensee authorized to use manual brachytherapy sources shall possess a portable radiation detection survey instrument capable of detecting dose rates over the range of 1 microsievert (0.1 mrem) per hour to 500 microsievert (50 mrem) per hour, and a portable radiation measurement survey instrument capable of measuring dose rates over the range 10 microsievert (1 mrem) per hour to 10 millisievert (1,000 mrem) per hour. The instruments shall be operable and calibrated in accordance with Rule .05(30).

(63) **Training for Use of Manual Brachytherapy Sources.** Except as provided in Rule .05(26), the licensee shall require an authorized user of a manual brachytherapy source for the uses authorized under Rule .05(55) to be a physician who:

(a) Is certified by a medical specialty board whose certification process has been recognized by the Department, an Agreement State or the Nuclear Regulatory Commission, and who meets the requirements in .05(63)(b)3. (The names of board certifications that have been recognized by the Nuclear Regulatory Commission or an Agreement State will be posted on the NRC's Web page.) To have its certification process recognized, a specialty board shall require all candidates for certification to:

1. Successfully complete a minimum of 3 years of residency training in a radiation oncology program approved by the Residency Review Committee of the Accreditation Council for Graduate Medical Education or the Royal College of Physicians and Surgeons of Canada or the Committee on Post-Graduate Training of the American Osteopathic Association; and

2. Pass an examination, administered by diplomates of the specialty board, that tests knowledge and competence in radiation safety, radionuclide handling, treatment planning, quality assurance, and clinical use of manual brachytherapy; or

(b) 1. Has completed a structured educational program in basic radionuclide handling techniques applicable to the use of manual brachytherapy sources that includes:

(i) 200 hours of classroom and laboratory training in the following areas:

(I) Radiation physics and instrumentation;

(II) Radiation protection;

(III) Mathematics pertaining to the use and measurement of radioactivity; and

(IV) Radiation biology; and

(ii) 500 hours of work experience, under the supervision of an authorized user who meets the requirements in .05(26), (63) or equivalent Agreement State, or Nuclear Regulatory Commission requirements at a medical institution, involving:

(I) Ordering, receiving, and unpacking radioactive materials safely and performing the related radiation surveys;

(II) Checking survey meters for proper operation;

(III) Preparing, implanting, and removing brachytherapy sources;

(IV) Maintaining running inventories of material on hand;

(V) Using administrative controls to prevent a misadministration involving the use of radioactive material; and

(VI) Using emergency procedures to control radioactive material; and

2. Has completed three years of supervised clinical experience in radiation oncology, under an authorized user who meets the requirements in Rule .05(26), .05(63) or equivalent Agreement State, Licensing State or Nuclear Regulatory Commission requirements, as part of a formal training program approved by the Residency Review Committee for Radiation Oncology of the Accreditation Council for Graduate Medical Education or the Royal College of Physicians and Surgeons of Canada or the Committee on Postdoctoral Training of the American Osteopathic Association. This experience may be obtained concurrently with the supervised work experience required by Rule .05(63)(b).1.(ii); and

3. Has obtained written attestation, signed by a preceptor authorized user, who meets the requirements in Rule .05(26), .05(63) or equivalent Agreement State or Nuclear Regulatory Commission requirements, that the individual has satisfactorily completed the requirements in Rules .05(63)(a)1. or .05(63)(b)1. and (63)(b)2. and has achieved a level of competency sufficient to independently function as an authorized user of manual brachytherapy sources for the medical uses authorized under in Rule .05(55).

(64) **Training for Ophthalmic Use of Strontium-90.** Except as provided in Rule .05(26), the licensee shall require an authorized user of a strontium-90 source for ophthalmic uses authorized under Rule .05(55) to be a physician who:

(a) Is an authorized user under Rule .05(63) or equivalent Agreement State, Licensing State or Nuclear Regulatory Commission requirements; or,

(b) 1. Has completed 24 hours of classroom and laboratory training applicable to the medical use of strontium-90 for ophthalmic radiotherapy. The training must include:

(i) Radiation physics and instrumentation;

(ii) Radiation protection;

(iii) Mathematics pertaining to the use and measurement of radioactivity; and

(iv) Radiation biology; and

2. Supervised clinical training in ophthalmic radiotherapy under the supervision of an authorized user at a medical institution, clinic, or private practice, and that includes the use of strontium-90 for the ophthalmic treatment of five individuals. This supervised clinical training must involve:

(i) Examination of each individual to be treated;

(ii) Calculation of the dose to be administered;

(iii) Administration of the dose; and

(iv) Follow-up and review of each individual's case history; and

3. Has obtained written attestation, signed by a preceptor authorized user, who meets the requirements in Rule .05(26), .05(63) or .05(64) or equivalent Agreement State, Licensing State or Nuclear Regulatory Commission requirements, that the individual has satisfactorily completed the requirements in Rule .05(64)(b)1. and 2., and has achieved a level of competency sufficient to independently function as an authorized user of strontium-90 for ophthalmic use.

Sealed Sources For Diagnosis

(65) **Use of Sealed Sources for Diagnosis.** A licensee shall use only sealed sources for diagnostic medical uses:

(a) Approved in the Sealed Source and Device Registry; and

(b) Handled in accordance with the manufacturer's radiation safety instructions.

(66) **Training for Use of Sealed Sources for Diagnosis.** Except as provided in Rule .05(26), the licensee shall require the authorized user of a diagnostic sealed source for the use in a device authorized under Rule .05(65) to be a physician, dentist, or podiatrist who:

(a) Is certified by a specialty board whose certification process includes all of the requirements in Rules .05(66)(b) and .05(66)(c) and whose certification has been recognized by an Agreement State or the Nuclear Regulatory Commission. (The names of board certifications that have been recognized by the Nuclear Regulatory Commission or an Agreement State will be posted on the NRC's Web page.); or

(b) Has had 8 hours of classroom and laboratory training in basic radionuclide handling techniques specifically applicable to the use of the device that includes:

1. Radiation physics and instrumentation;

2. Radiation protection;

3. Mathematics pertaining to the use and measurement of radioactivity; and

4. Radiation biology; and

(c) Has completed training in the use of the device for the uses requested.

Photon-Emitting Remote Afterloader Units, Teletherapy Units, and Gamma Stereotactic Radiosurgery Units

(67) **Use of Sealed Sources in a Remote Afterloader Unit, Teletherapy Unit, or Gamma Stereotactic Radiosurgery Unit.** A licensee shall use sealed sources in photon emitting remote afterloader units, teletherapy units, or gamma stereotactic units for therapeutic medical uses:

(a) As approved in the Sealed Source and Device Registry; or

(b) In research in accordance with an effective Investigational Device Exemption (IDE) application accepted by the FDA provided the requirements of Rule .05(21)(a) are met.

(68) **Surveys of Patients and Human Research Subjects Treated with a Remote Afterloader Unit.**

(a) Before releasing a patient or a human research subject from licensee control, a licensee shall make a survey of the patient or the human research subject and the remote afterloader unit with a portable radiation detection survey instrument to confirm that the source(s) has been removed from the patient or human research subject and returned to the safe, shielded position.

(b) A licensee shall retain a record of the surveys in accordance with Rule .05(102).

(69) **Installation, Maintenance, Adjustment, and Repair.**

(a) Only a person specifically licensed by the Department, the Nuclear Regulatory Commission or an Agreement State shall install, maintain, adjust, or repair a remote afterloader unit, teletherapy unit, or gamma stereotactic radiosurgery unit that involves work on the source(s) shielding, the source(s) driving unit, or other electronic or mechanical component that could expose the source(s), reduce the shielding around the source(s), or compromise the radiation safety of the unit or the source(s).

(b) Except for low dose-rate remote afterloader units, only a person specifically licensed by the Department, an Agreement State, Licensing State or the Nuclear Regulatory Commission shall install, replace, relocate, or remove a sealed source or source contained in other remote afterloader units, teletherapy units, or gamma stereotactic units.

(c) For a low dose-rate remote afterloader unit, only a person specifically licensed by the Department, an Agreement State, Licensing State or the Nuclear Regulatory Commission, or an authorized medical physicist shall install, replace, relocate, or remove a sealed source(s) contained in the unit.

(d) A licensee shall retain a record of the installation, maintenance, adjustment and repair done on remote afterloader units, teletherapy units, and gamma stereotactic radiosurgery units in accordance with Rule .05(106).

(70) **Safety Procedures and Instructions for Remote Afterloader Units, Teletherapy Units, and Gamma Stereotactic Radiosurgery Units.**

(a) A licensee shall:

1. Secure the unit, the console, the console keys, and the treatment room when not in use or when unattended;

2. Permit only individuals approved by the authorized user, Radiation Safety Officer, or authorized medical physicist to be present in the treatment room during treatment with the source(s);

3. Prevent dual operation of more than one radiation producing device in a treatment room, if applicable; and

4. Develop, implement, and maintain written procedures for responding to an abnormal situation when the operator is unable to place the source(s) in the shielded position, or remove the patient or human research subject from the radiation field with controls from outside the treatment room. This procedure must include:

(i) Instructions for responding to equipment failures and the names of the individuals responsible for implementing corrective actions;

(ii) The process for restricting access to and posting of the treatment area to minimize the risk of inadvertent exposure; and

(iii) The names and telephone numbers of the authorized users, the authorized medical physicist, and the Radiation Safety Officer to be contacted if the unit or console operates abnormally.

(b) A copy of the procedures required by Rule .05(70)(a)4. must be physically located at the unit console.

(b) A licensee shall post instructions at the unit console to inform the operator of:

1. The location of the procedures required by Rule .05(70)(a)4.; and

2. The names and telephone numbers of the authorized users, the authorized medical physicist, and the Radiation Safety Officer to be contacted if the unit or console operates abnormally.

(d) A licensee shall provide instruction, initially and at least annually, to all individuals who operate the unit, as appropriate to the individual's assigned duties, in:

1. The procedures identified in Rule .05(70)(a)4; and

2. The operating procedures for the unit.

(e) A licensee shall ensure that operators, authorized medical physicists, and authorized users participate in drills of the emergency procedures, initially and at least annually.

(f) A licensee shall retain a record of individuals receiving instruction required by Rule .05(70)(d), in accordance with Rule .05(101).

(71) **Safety Precautions for Remote Afterloader Units, Teletherapy Units, and Gamma Stereotactic Radiosurgery Units.**

(a) A licensee shall control access to the treatment room by a door at each entrance.

(b) A licensee shall equip each entrance to the treatment room with an electrical interlock system that will:

1. Prevent the operator from initiating the treatment cycle unless each treatment room entrance door is closed;

2. Cause the source(s) to be shielded promptly when an entrance door is opened; and

3. Prevent the source(s) from being exposed following an interlock interruption until all treatment room entrance doors are closed and the source(s) on-off control is reset at the console.

(c) A licensee shall require any individual entering the treatment room to assure, through the use of appropriate radiation monitors, that radiation levels have returned to ambient levels.

(d) Except for low-dose remote afterloader units, a licensee shall construct or equip each treatment room with viewing and intercom systems to permit continuous observation of the patient or the human research subject from the treatment console during irradiation.

(e) For licensed activities where sources are placed within the patient's or human research subject's body, a licensee shall only conduct treatments which allow for expeditious removal of a decoupled or jammed source.

(f) In addition to the requirements specified in Rule .05(71)(a) through (71)(e), a licensee shall:

1. For low dose-rate, medium dose-rate, and pulsed dose-rate remote afterloader units, require:

(i) An authorized medical physicist and either an authorized user or a physician, under the supervision of an authorized user, who has been trained in the operation and emergency response for the unit to be physically present during the initiation of all patient treatments involving the unit; and

(ii) An authorized medical physicist and either an authorized user or an individual, under the supervision of an authorized user, who has been trained to remove the source applicator(s) in

the event of an emergency involving the unit, to be immediately available during continuation of all patient treatments involving the unit.

2. For high dose-rate remote afterloader unit, require:

(i) An authorized user and an authorized medical physicist to be physically present during the initiation of all patient treatments involving the unit; and

(ii) An authorized medical physicist and either an authorized user or a physician, under the supervision of an authorized user, who has been trained in the operation and emergency response for the unit, to be physically present during continuation of all patient treatments involving the unit.

3. For gamma stereotactic radiosurgery units, require an authorized user and an authorized medical physicist to be physically present throughout all patient treatments involving the unit.

4. Notify the Radiation Safety Officer, or his or her designee, and an authorized user as soon as possible, if the patient or human research subject has a medical emergency and, immediately, if the patient dies.

(g) A licensee shall have emergency response equipment available near each treatment room, to respond to a source that inadvertently:

1. Remains in the unshielded position; or

2. Lodges within the patient following completion of the treatment.

(72) **Dosimetry Equipment.**

(a) Except for low dose-rate remote afterloader sources where the source output or activity is determined by the manufacturer, a licensee shall have a calibrated dosimetry system available for use. To satisfy this requirement, one of the following two conditions must be met:

1. The system must have been calibrated using a system or source traceable to the National Institute of Standards and Technology (NIST) and published protocols accepted by nationally recognized bodies; or by a calibration laboratory accredited by the American Association of Physicists in Medicine (AAPM). The calibration must have been performed within the previous 2 years and after any servicing that may have affected system calibration; or

2. The system must have been calibrated within the previous 4 years;18 to 30 months after that calibration, the system must have been inter-compared with another dosimetry system that was calibrated within the past 24 months by NIST or by a calibration laboratory accredited by the AAPM. The results of the inter-comparison must have indicated that the calibration factor of the licensee's system had not changed by more than 2 percent. The licensee may not use the inter-comparison result to change the calibration factor. When inter-comparing dosimetry systems to be used for calibrating sealed sources for therapeutic units, the licensee shall use a comparable unit with beam attenuators or collimators, as applicable, and sources of the same radionuclide as the source used at the licensee's facility.

(b) The licensee shall have available for use a dosimetry system for spot- check output

measurements, if applicable. To satisfy this requirement, the system may be compared with a system that has been calibrated in accordance with Rule .05(72)(a). This comparison must have been performed within the previous year and after each servicing that may have affected system calibration. The spot-check system may be the same system used to meet the requirement in Rule .05(72)(a).

(c) The licensee shall retain a record of each calibration, inter-comparison, and comparison in accordance with Rule .05(107).

(73) **Full Calibration Measurements on Teletherapy Units.**

(a) A licensee authorized to use a teletherapy unit for medical use shall perform full calibration measurements on each teletherapy unit:

1. Before the first medical use of the unit; and

2. Before medical use under the following conditions:

(i) Whenever spot-check measurements indicate that the output differs by more than 5 percent from the output obtained at the last full calibration corrected mathematically for radioactive decay;

(ii) Following replacement of the source or following reinstallation of the teletherapy unit in a new location;

(iii) Following any repair of the teletherapy unit that includes removal of the source or major repair of the components associated with the source exposure assembly; and

3. At intervals not exceeding 1 year.

(b) To satisfy the requirement of Rule .05(73)(a), full calibration measurements must include determination of:

1. The output within +/-3 percent for the range of field sizes and for the distance or range of distances used for medical use;

2. The coincidence of the radiation field and the field indicated by the light beam localizing device;

3. The uniformity of the radiation field and its dependence on the orientation of the useful beam;

4. Timer accuracy and linearity over the range of use;

5. On-off error; and

6. The accuracy of all distance measuring and localization devices in medical use.

(c) A licensee shall use the dosimetry system described in Rule .05(72)(a) to measure the

output for one set of exposure conditions. The remaining radiation measurements required in Rule .05(73)(b)1. may be made using a dosimetry system that indicates relative dose rates.

(d) A licensee shall make full calibration measurements required by Rule .05(73)(a) in accordance with published protocols accepted by nationally recognized bodies.

(e) A licensee shall mathematically correct the outputs determined in Rule .05(73)(b)1. for physical decay for intervals not exceeding 1 month for cobalt-60, 6 months for cesium-137, or at intervals consistent with 1 percent decay for all other nuclides.

(f) Full calibration measurements required by Rule .05(73)(a) and physical decay corrections required by Rule .05(73)(e) must be performed by the authorized medical physicist.

(g) A licensee shall retain a record of each calibration in accordance with Rule .05(108).

(74) **Full Calibration Measurements on Remote Afterloader Units.**

(a) A licensee authorized to use a remote afterloader unit for medical use shall perform full calibration measurements on each unit:

1. Before the first medical use of the unit;

2. Before medical use under the following conditions:

(i) Following replacement of the source or following reinstallation of the unit in a new location outside the facility; and

(ii) Following any repair of the unit that includes removal of the source or major repair of the components associated with the source exposure assembly;

3. At intervals not exceeding 1 quarter for high dose-rate, medium dose-rate, and pulsed dose-rate remote afterloader units with sources whose half-life exceeds 75 days; and

4. At intervals not exceeding 1 year for low dose-rate remote afterloader units.

(b) To satisfy the requirement of Rule .05(74)(a), full calibration measurements must include, as applicable, determination of:

1. The output within +/- 5 percent;

2. Source positioning accuracy to within +/- 1 millimeter;

3. Source retraction with backup battery upon power failure; and

4. Length of the source transfer tubes;

5. Timer accuracy and linearity over the typical range of use;

6. Length of the applicators; and

7. Function of the source transfer tubes, applicators, and transfer tube-applicator interfaces.

(c) In addition to the requirements for full calibrations for low dose-rate remote afterloader units in Rule .05(74)(b), a licensee shall perform an autoradiograph of the source(s) to verify inventory and source(s) arrangement at intervals not exceeding one quarter.

(d) A licensee shall use the dosimetry system described in Rule .05(72)(a) to measure the output.

(e) A licensee shall make full calibration measurements required by Rule .05(74)(a) in accordance with published protocols accepted by nationally recognized bodies.

(f) For low dose-rate remote afterloader units, a licensee may use measurements provided by the source manufacturer that are made in accordance with Rule .05(74)(a) through (74)(e).

(g) A licensee shall mathematically correct the outputs determined in Rule .05(74)(b)1. of this section for physical decay at intervals consistent with 1 percent physical decay.

(h) Full calibration measurements required by Rule .05(74)(a) and physical decay corrections required by Rule .05(74)(g) must be performed by the authorized medical physicist.

(i) A licensee shall retain a record of each calibration in accordance with Rule .05(108).

(75) **Full Calibration Measurements on Gamma Stereotactic Radiosurgery Units.**

(a) A licensee authorized to use a gamma stereotactic radiosurgery unit for medical use shall perform full calibration measurements on each unit:

1. Before the first medical use of the unit;

2. Before medical use under the following conditions:

(i) Whenever spot-check measurements indicate that the output differs by more than 5 percent from the output obtained at the last full calibration corrected mathematically for radioactive decay;

(ii) Following replacement of the sources or following reinstallation of the gamma stereotactic radiosurgery unit in a new location; and

(iii) Following any repair of the gamma stereotactic radiosurgery unit that includes removal of the sources or major repair of the components associated with the source assembly; and

3. At intervals not exceeding 1 year, with the exception that relative helmet factors need only be determined before the first medical use of a helmet and following any damage to a helmet.

(b) To satisfy the requirement of Rule .05(75)(a), full calibration measurements must include determination of:

1. The output within +/-3 percent;

2. Relative helmet factors;

3. Isocenter coincidence;

4. Timer accuracy and linearity over the range of use;

5. On-off error;

6. Trunnion centricity;

7. Treatment table retraction mechanism, using backup battery power or hydraulic backups with the unit off;

8. Helmet microswitchs;

9. Emergency timing circuits; and

10. Stereotactic frames and localizing devices (trunnions).

(c) A licensee shall use the dosimetry system described in Rule .05(72)(a) to measure the output for one set of exposure conditions. The remaining radiation measurements required in Rule .05(75)(b)1. may be made using a dosimetry system that indicates relative dose rates.

(d) A licensee shall make full calibration measurements required by Rule .05(75)(a) in accordance with published protocols accepted by nationally recognized bodies.

(e) A licensee shall mathematically correct the outputs determined in Rule .05(75)(b)1. at intervals not exceeding 1 month for cobalt-60 and at intervals consistent with 1 percent physical decay for all other radionuclides.

(f) Full calibration measurements required by Rule .05(75)(a) and physical decay corrections required by Rule .05(75)(e) must be performed by the authorized medical physicist.

(g) A licensee shall retain a record of each calibration in accordance with Rule .05(108).

(76) **Periodic Spot-Checks for Teletherapy Units.**

(a) A licensee authorized to use teletherapy units for medical use shall perform output spot-checks on each teletherapy unit once in each calendar month that include determination of:

1. Timer accuracy, and timer linearity over the range of use;

2. On-off error;

3. The coincidence of the radiation field and the field indicated by the light beam localizing device;

4. The accuracy of all distance measuring and localization devices used for medical use;

5. The output for one typical set of operating conditions measured with the dosimetry system described in Rule .05(72)(b); and

6. The difference between the measurement made in Rule .05(76)(a)5. and the anticipated output, expressed as a percentage of the anticipated output (i.e., the value obtained at last full calibration corrected mathematically for physical decay).

(b) A licensee shall perform measurements required by Rule .05(76)(a) in accordance with procedures established by the authorized medical physicist. That individual need not actually perform the spot check measurements.

(c) A licensee shall have the authorized medical physicist review the results of each spot-check within 15 days. The authorized medical physicist shall promptly notify the licensee in writing of the results of each spot-check.

(d) A licensee authorized to use a teletherapy unit for medical use shall perform safety spot-checks of each teletherapy facility once in each calendar month and after each source installation to assure proper operation of:

1. Electrical interlocks at each teletherapy room entrance;

2. Electrical or mechanical stops installed for the purpose of limiting use of the primary beam of radiation (restriction of source housing angulation or elevation, carriage or stand travel and operation of the beam on-off mechanism);

3. Source exposure indicator lights on the teletherapy unit, on the control console, and in the facility;

4. Viewing and intercom systems;

5. Treatment room doors from inside and outside the treatment room; and

6. Electrically assisted treatment room doors with the teletherapy unit electrical power turned off.

(e) If the results of the checks required in Rule .05(76)(d) indicate the malfunction of any system, a licensee shall lock the control console in the off position and not use the unit except as may be necessary to repair, replace, or check the malfunctioning system.

(f) A licensee shall retain a record of each spot-check required by Rule.05(76)(a) and (76)(d), in accordance with Rule .05(109).

(77) **Periodic Spot-Checks for Remote Afterloader Units.**

(a) A licensee authorized to use remote afterloader units for medical use shall perform spot-checks of each remote afterloader facility and on each unit:

1. At the beginning of each day of use of a high dose-rate, medium dose-rate or pulsed dose-rate remote afterloader unit;

2. Prior to each patient treatment with a low dose-rate remote afterloader unit; and

3. After each source installation.

(b) The licensee shall have the authorized medical physicist establish written procedures for performing the spot-checks required in Rule .05(77)(a). The authorized medical physicist need not actually perform the spot-check measurements.

(c) A licensee shall have the authorized medical physicist review the results of each spot-check within 15 days. The authorized medical physicist shall notify the licensee as soon as possible in writing of the results of each spot check.

(d) To satisfy the requirements of Rule .05(77)(a), spot-checks must, at a minimum, assure proper operation of:

1. Electrical interlocks at each remote afterloader unit room entrance;

2. Source exposure indicator lights on the remote afterloader unit, on the control console, and in the facility;

3. Viewing and intercom systems in each high dose-rate, medium dose-rate and pulsed dose-rate remote afterloader facility;

4. Emergency response equipment;

5. Radiation monitors used to indicate the source position;

6. Timer accuracy;

7. Clock (date and time) in the unit's computer; and

8. Decayed source(s) activity in the unit's computer.

(e) If the results of the checks required in Rule .05(77)(d) indicate the malfunction of any system, a licensee shall lock the control console in the off position and not use the unit except as may be necessary to repair, replace, or check the malfunctioning system.

(f) A licensee shall retain a record of each check required by Rule .05(77)(d) in accordance with Rule .05(110).

(78) **Periodic Spot-Checks for Gamma Stereotactic Radiosurgery Units.**

(a) A licensee authorized to use a gamma stereotactic radiosurgery unit for medical use shall perform spot-checks of each gamma stereotactic radiosurgery facility and on each unit:

1. Monthly;

2. At the beginning of each day of use; and

3. After each source installation.

(b) The licensee shall have the authorized medical physicist:

1. Establish written procedures for performing the spot-checks required in Rule .05(78)(a); and

2. Review the results of each spot-check required by Rule .05(78)(a)1. within 15 days of the check. The authorized medical physicist need not actually perform the spot-check measurements.

(c) To satisfy the requirements of Rule .05(78)(a)1., spot-checks must, at a minimum:

1. Assure proper operation of:

(i) Treatment table retraction mechanism, using backup battery power or hydraulic backups with the unit off;

(ii) Helmet microswitchs;

(iii) Emergency timing circuits; and

(iv) Stereotactic frames and localizing devices (trunnions).

2. Determine:

(i) The output for one typical set of operating conditions measured with the dosimetry system described in Rule .05(72)(b);

(ii) The difference between the measurement made in Rule .05(78)(c)2.(i) of this section and the anticipated output, expressed as a percentage of the anticipated output (i.e., the value obtained at last full calibration corrected mathematically for physical decay);

(iii) Source output against computer calculation;

(iv) Timer accuracy and linearity over the range of use;

(v) On-off error; and

(vi) Trunnion centricity.

(d) To satisfy the requirements of Rule .05(78)(a)2. and (78)(a)3., spot- checks must assure proper operation of:

1. Electrical interlocks at each gamma stereotactic radiosurgery room entrance;

2. Source exposure indicator lights on the gamma stereotactic radiosurgery unit, on the control console, and in the facility;

3. Viewing and intercom systems;

4. Timer termination;

5. Radiation monitors used to indicate room exposures; and

6. Emergency off buttons.

(e) A licensee shall arrange for prompt repair of any system identified in Rule .05(78)(c) that is not operating properly.

(f) If the results of the checks required in Rule .05(78)(d) indicate the malfunction of any system, a licensee shall lock the control console in the off position and not use the unit except as may be necessary to repair, replace, or check the malfunctioning system.

(g) A licensee shall retain a record of each check required by Rule .05(78)(c) and (78)(d) in accordance with Rule .05(111).

(79) **Additional Technical Requirements for Mobile Remote Afterloader Units.**

(a) A licensee providing mobile remote afterloader service shall:

1. Check survey instruments before medical use at each address of use or on each day of use, whichever is more frequent; and

2. Account for all sources before departure from a client's address of use.

(b) In addition to the periodic spot-checks required by Rule .05(77), a licensee authorized to use mobile afterloaders for medical use shall perform checks on each remote afterloader unit before use at each address of use. At a minimum, checks must be made to verify the operation of:

1. Electrical interlocks on treatment area access points;

2. Source exposure indicator lights on the remote afterloader unit, on the control console, and in the facility;

3. Viewing and intercom systems;

4. Applicators, source transfer tubes, and transfer tube-applicator interfaces;

5. Radiation monitors used to indicate room exposures;

6. Source positioning (accuracy); and

7. Radiation monitors used to indicate whether the source has returned to a safe shielded position.

(c) In addition to the requirements for checks in Rule .05(79)(b), a licensee shall ensure overall

proper operation of the remote afterloader unit by conducting a simulated cycle of treatment before use at each address of use.

(d) If the results of the checks required in Rule .05(79)(b) indicate the malfunction of any system, a licensee shall lock the control console in the off position and not use the unit except as may be necessary to repair, replace, or check the malfunctioning system.

(e) A licensee shall retain a record of each check required by Rule .05(79)(b) in accordance with Rule .05(112).

(80) **Radiation Surveys.**

(a) In addition to the survey requirements in Rule .03(8) of this Chapter, a person licensed pursuant to Rule .05 shall make surveys to ensure that the maximum radiation levels and average radiation levels from the surface of the main source safe with the source(s) in the shielded position does not exceed the levels stated in the Sealed Source and Device Registry.

(b) The licensee shall make the survey required by Rule .05(80)(a) at installation of a new source and following repairs to the source(s) shielding, the source(s) driving unit, or other electronic or mechanical component that could expose the source, reduce the shielding around the source(s), or compromise the radiation safety of the unit or the source(s).

(c) A licensee shall retain a record of the radiation surveys required by Rule .05(80)(a) of this section in accordance with Rule .05(113).

(81) **Five-Year Inspection for Teletherapy and Gamma Stereotactic Radiosurgery Units.**

(a) A licensee shall have each teletherapy unit and gamma stereotactic radiosurgery unit fully inspected and serviced during source replacement or at intervals not to exceed 5 years, whichever comes first, to assure proper functioning of the source exposure mechanism.

(b) This inspection and servicing may only be performed by persons specifically licensed to do so by the Department, an Agreement State, a Licensing State or the Nuclear Regulatory Commission.

(c) A licensee shall keep a record of the inspection and servicing in accordance with Rule .05(114).

(82) **Therapy-Related Computer Systems.** The licensee shall perform acceptance testing on the treatment planning system in accordance with published protocols accepted by nationally recognized bodies. At a minimum, the acceptance testing must include, as applicable, verification of:

(a) The source-specific input parameters required by the dose calculation algorithm;

(b) The accuracy of dose, dwell time, and treatment time calculations at representative points;

(c) The accuracy of isodose plots and graphic displays;

(d) The accuracy of the software used to determine radioactive source positions from

radiographic images; and

(e) The accuracy of electronic transfer of the treatment delivery parameters to the treatment delivery unit from the treatment planning system.

(83) **Possession of Survey Instruments.** A licensee authorized to use radioactive material in remote afterloader units, teletherapy units, and gamma stereotactic radiosurgery units shall possess a portable radiation detection survey instrument capable of detecting dose rates over the range of 1 microsievert (0.1 mrem) per hour to 500 microsievert (50 mrem) per hour, and a portable radiation measurement survey instrument capable of measuring dose rates over the range 10 microsievert (1 mrem) per hour to 10 millisievert (1,000 mrem) per hour. The instruments shall be operable and calibrated in accordance with Rule .05(30).

(84) **Training for Use of Remote Afterloader Units, Teletherapy Units, and Gamma Stereotactic Radiosurgery Units.** Except as provided in Rule .05(26), the licensee shall require an authorized user of a sealed source for a use authorized under Rule .05(67) to be a physician who:

(a) Is certified by a medical specialty board whose certification has been recognized by the Department, an Agreement State or the Nuclear Regulatory Commission, and who meets the requirements in .05(84)(b)3. and (c). (The names of board certifications that have been recognized by the Nuclear Regulatory Commission or an Agreement State will be posted on the NRC's web page.) To have its certification process recognized, a specialty board shall require all candidates for certification to:

1. Successfully complete a minimum of 3 years of residency training in a radiation therapy program approved by the Residency Review Committee of the Accreditation Council for Graduate Medical Education or the Royal College of Physicians and Surgeons of Canada or the Committee on Post-Graduate Training of the American Osteopathic Association; and

2. Pass an examination, administered by diplomates of the specialty board, which tests knowledge and competence in radiation safety, radionuclide handling, treatment planning, quality assurance, and clinical use of stereotactic radiosurgery, remote afterloaders and external beam therapy; or

(b) 1. Has completed a structured educational program in basic radionuclide techniques applicable to the use of a sealed source in a therapeutic medical unit that includes:

(i) 200 hours of classroom and laboratory training in the following areas:

(I) Radiation physics and instrumentation;

(II) Radiation protection;

(III) Mathematics pertaining to the use and measurement of radioactivity; and

(IV) Radiation biology; and

(ii) 500 hours of work experience, under the supervision of an authorized user who meets the requirements in Rule .05(26), .05(84) or equivalent Agreement State, or Nuclear Regulatory

Commission requirements at a medical institution, involving:

(I) Reviewing full calibration measurements and periodic spot checks;

(II) Preparing treatment plans and calculating treatment doses and times;

(III) Using administrative controls to prevent a mis-administration involving the use of radioactive material;

(IV) Implementing emergency procedures to be followed in the event of the abnormal operation of the medical unit or console;

(V) Checking and using survey meters; and

(VI) Selecting the proper dose and how it is to be administered; and

2. Has completed three years of supervised clinical experience in radiation oncology, under an authorized user who meets the requirements in Rule .05(26), .05(84) or equivalent Agreement State or Nuclear Regulatory Commission requirements, as part of a formal training program approved by the Residency Review Committee for Radiation Oncology of the Accreditation Council for Graduate Medical Education or the Royal College of Physicians and Surgeons of Canada or the Committee on Postdoctoral Training of the American Osteopathic Association. This experience may be obtained concurrently with the supervised work experience required by Rule .05(84)(b)1.(ii); and

3. Has obtained written attestation that the individual has satisfactorily completed the requirements in Rule .05(84)(a)1. or .05(84)(b)1. and .05(84)(b)2., and .05(84)(c), and has achieved a level of competency sufficient to function independently as an authorized user of each type of therapeutic medical unit for which the individual is requesting authorized user status. The written attestation must be signed by a preceptor authorized user who meets the requirements in Rule .05(26), .05(84) or equivalent Agreement State requirements for an authorized user for each type of therapeutic medical unit for which the individual is requesting authorized user status; and

(c) Has received training in device operation, safety procedures, and clinical use for the type(s) of use for which authorization is sought. This training requirement may be satisfied by satisfactory completion of a training program provided by the vendor for new users or by receiving training supervised by an authorized user or authorized medical physicist, as appropriate, who is authorized for the type(s) of use for which the individual is seeking authorization.

Other Medical Uses of Radioactive Material or Radiation from Radioactive Material

(85) **Other Medical Uses of Radioactive Material or Radiation From Radioactive Material.** A licensee may use radioactive material or a radiation source approved for medical use that is not specifically addressed in Rule .05 if:

(a) The applicant or licensee has submitted the information required by Rule .05(8)(b), (8)(c) and (8)(d); and

(b) The applicant or licensee has received written approval from the NRC, an Agreement State, or Licensing State in a license and uses the material in accordance with the regulations and specific conditions the NRC, Agreement State, or Licensing State considers necessary for the medical use of the material.

Records

(86) **Records of Authority and Responsibilities for Radiation Protection Programs.**

(a) A licensee shall retain a record of actions taken by the licensee's management in accordance with Rule .05(15)(a) for 5 years. The record must include a summary of the actions taken and a signature of licensee management.

(b) The licensee shall retain a current copy of the authorities, duties and responsibilities of the Radiation Safety Officer as required by Rule .05(15)(d), and a signed copy of the Radiation Safety Officer's agreement to be responsible for implementing the radiation safety program, as required by Rule .05(15)(b). The record must include the signature of the Radiation Safety Officer and licensee management.

(c) The minutes of each Radiation Safety Committee meeting held in accordance with Rule .05(15)(g) shall include:

1. The date of the meeting;

2. Members present;

3. Members absent; and

4. Summary of deliberations and discussions.

(87) **Records of Radiation Protection Program Safety Changes.** A licensee shall retain a record of each radiation protection program change made in accordance with Rule .05(16)(a) for 5 years. The record must include a copy of the old and new procedures; the effective date of the change; and the signature of the licensee management that reviewed and approved the change.

(88) **Records of Written Directives.** A licensee shall retain a copy of each written directive as required by Rule .05(19) for 3 years.

(89) **Records of Misadministrations.** A licensee shall retain a record of misadministrations reported in accordance with Rule .05(115) for 3 years. The record must contain the licensee's name; names of the individuals involved; the social security number or other identification number if one has been assigned, of the individual who is the subject of the misadministration; a brief description of the event; why it occurred; the effect, if any, on the individual; the actions, if any, taken, or planned, to prevent recurrence; and, whether the licensee notified the individual (or the individual's responsible relative or guardian) and, if not, whether such failure to notify was based on guidance from the referring physician.

(90) **Record of a Dose to an Embryo/Fetus or a Nursing Child.** A licensee shall retain a record of a dose to an embryo/fetus or a nursing child reported in accordance with Rule

.05(116) for 3 years. The record must contain the licensee's name; names of all the individuals involved; social security number or other identification number if one has been assigned to the pregnant individual or nursing child who is the subject of the event; a brief description of the event; why it occurred; the effect, if any, on the embryo/fetus or nursing child; the actions, if any, taken, or planned, to prevent recurrence; and whether the licensee notified the pregnant individual or mother (or the mother's or child's responsible relative or guardian) and, if not, whether such failure to notify was based on guidance from the referring physician.

(91) **Records of Calibrations of Instruments Used to Measure the Activity of Unsealed Radioactive Material.** A licensee shall maintain a record of instrument calibrations required by Rule .05(29) for 3 years. The records must include the model and serial number of the instrument, the date of the calibration, the results of the calibration, and the name of the individual who performed the calibration.

(92) **Records of Survey Instrument Calibrations.** A licensee shall maintain a record of instrument calibrations required by Rule .05(30) for 3 years. The record must include the model and serial number of the instrument, the date of the calibration, the results of the calibration, and the name of the individual who performed the calibration.

(93) **Records of Dosages of Unsealed Radioactive Material for Medical Use.** A licensee shall maintain a record of dosage determinations required by Rule .05(31) for 3 years. The record must contain the radioactive drug; the patient's or human research subject's name, or identification number if one has been assigned; prescribed dosage; the determined dosage, or a notation that the total activity is less than 1.11 MBq (30 µCi); the date and time of the dosage determination; and the name of the individual who determined the dosage.

(94) **Records of Possession of Sealed Sources and Brachytherapy Sources.** A licensee shall retain a record of the semi-annual physical inventory of sealed sources and brachytherapy sources required by Rule .05(33)(d) for 3 years. The inventory record must contain the model number of each source, and serial number if one has been assigned, the identity of each source radionuclide and its nominal activity, the location of each source, and the name of the individual who performed the inventory.

(95) **Records of Surveys for Ambient Radiation Exposure Rate.** A licensee shall retain a record of each survey required by Rule .05(36) for 3 years. The record must include the date of the survey, the results of the survey, the instrument used to make the survey, and the name of the individual who performed the survey.

(96) **Records of the Release of Individuals Containing Radioactive Drugs or Implants Containing Radioactive Material.**

(a) A licensee shall retain a record, signed by the authorized user, of the basis for authorizing the release of an individual, for 3 years after the date of release,

(b) A licensee shall retain a record, for 3 years after the date of release, that the instructions required by Rule .05(37)(b) were provided to a breast-feeding woman.

(97) **Records of Administrative and Technical Requirements that Apply to the Provision of Mobile Services.**

(a) A licensee shall retain a copy of the letter(s) that permits the use of radioactive material at a client's address of use, as required by Rule .05(9)(b), for 3 years after the last provision of service.

(b) A licensee shall retain the record of each survey required by Rule .05(38)(f) for 3 years. The record must include the date of the survey, the results of the survey, the instrument used to make the survey, and the name of the individual who performed the survey.

(98) **Records of Decay-in-Storage.** A licensee shall maintain records of the disposal of licensed materials, as required by Rule .05(40), for 3 years. The record must include the date of the disposal, the survey instrument used, the background radiation level, the radiation level measured at the surface of each waste container, and the name of the individual who performed the survey.

(99) **Records of Radionuclide Purity.** A licensee shall maintain a record of the radionuclide contaminant concentration tests required by Rule .05(45) for 3 years. The record must include, for each measured elution of radionuclide used to prepare a radioactive drug, the ratio of the measures expressed as kilobecquerel of contaminant per megabecquerel of desired radionuclide (microcurie/millicurie), or microgram of contaminant per megabecquerel of desired radionuclide (microgram/millicurie), the time and date of the measurement, and the name of the individual who made the measurement.

(100) **Records of Training.** A licensee shall maintain records of training required by Rule .05(25) for 3 years after the last date an individual was authorized to act as a nuclear medicine technologist or radiation therapist at the licensee's facility.

(101) **Records of Safety Instruction and Training.** A licensee shall maintain a record of safety instructions and training required by Rules .05(49), (58) and (70) for 3 years. The record must include a list of the topics covered, the date of the instruction or training, the name(s) of the attendee(s), and the name(s) of the individual(s) who provided the instruction.

(102) **Records of Radiation Surveys of Patients and Human Research Subjects.** A licensee shall maintain a record of the surveys required by Rule .05(56) and (68) for 3 years. Each record must include the date and results of the survey, the survey instrument used, and the name of the individual who made the survey.

(103) **Records of Brachytherapy Source Inventory.**

(a) A licensee shall maintain a record of brachytherapy source accountability required by Rule .05(57) for 3 years.

(b) For temporary implants, the record must include:

1. The number and activity of sources removed from storage, the time and date they were removed from storage, the name of the individual who removed them from storage, and the location of use;

2. The number and activity of unused sources returned to storage, the time and date they were returned to storage, and the name of the individual who returned them to storage; and

3. The number and activity of temporarily implanted sources removed from the patient or human research subject, the time and date they were returned to storage, and the name of the individual who returned them to storage.

(c) For permanent implants, the record must include:

1. The number and activity of sources removed from storage, the date they were removed from storage, and the name of the individual who removed them from storage;

2. The number and activity of sources not implanted, the date they were returned to storage, and the name of the individual who returned them to storage; and

3. The number and activity of sources permanently implanted in the patient or human research subject.

(104) **Records of Calibration Measurements on Brachytherapy Sources.** A licensee shall maintain a record of the calibrations on brachytherapy sources required by Rule .05(60) for 3 years after the last use of the source. The record must include the date of the calibration; the manufacturer's name, model number, and serial number for the source and the instruments used to calibrate the source; the source output or activity; source positioning accuracy within applicators; and the signature of the authorized medical physicist.

(105) **Records of Decay of Strontium-90 Sources for Ophthalmic Treatments.** The licensee shall maintain a record of the activity of a strontium 90 source required by Rule .05(60) for the life of the source. The record must include the date and initial activity of the source as determined under Rule .05(60), and for each decay calculation, the date, and the source activity and the signature of the authorized medical physicist.

(106) **Records of Installation, Maintenance, Adjustment, and Repair.** A licensee shall retain a record of the installation, maintenance, adjustment, and repair of remote afterloader units, teletherapy units, and gamma stereotactic radiosurgery units as required by Rule .05(69) for 3 years. For each installation, maintenance, adjustment and repair, the record must include the date, description of the service, and name(s) of the individual(s) who performed the work.

(107) **Records of Dosimetry Equipment.**

(a) A licensee shall retain a record of the calibration, inter-comparison, and comparisons of its dosimetry equipment done in accordance with Rule .05(72) for the duration of the license.

(b) For each calibration, inter-comparison, or comparison, the record must include:

1. The date;

2. The manufacturer's name, model numbers and serial numbers of the instruments that were calibrated, inter-compared, or compared as required by Rule .05(72)(a) and (72)(b);

3. The correction factor that was determined from the calibration or comparison or the apparent correction factor that was determined from an inter-comparison; and

4. The names of the individuals who performed the calibration, inter- comparison, or comparison.

(108) **Records of Teletherapy, Remote Afterloader, and Gamma Stereotactic Radiosurgery Full Calibrations.**

(a) A licensee shall maintain a record of the teletherapy, remote afterloader, and gamma stereotactic radiosurgery full calibrations required by Rule .05(73), (74) and (75) for 3 years.

(b) The record must include:

1. The date of the calibration;

2. The manufacturer's name, model number, and serial number for the teletherapy, remote afterloader, and gamma stereotactic radiosurgery unit(s), the source(s), and instruments used to calibrate the unit;

3. The results and assessments of the full calibrations;

4. The results of the autoradiograph required for low dose-rate remote afterloader units; and

5. The signature of the authorized medical physicist who performed the full calibration.

(109) **Records of Periodic Spot-Checks for Teletherapy Units.**

(a) A licensee shall retain a record of each periodic spot-check for teletherapy units required by Rule .05(76) for 3 years.

(b) The record must include:

1. The date of the spot-check;

2. The manufacturer's name, model number, and serial number for the teletherapy unit, source and instrument used to measure the output of the teletherapy unit;

3. An assessment of timer linearity and constancy;

4. The calculated on-off error;

5. A determination of the coincidence of the radiation field and the field indicated by the light beam localizing device;

6. The determined accuracy of each distance measuring and localization device;

7. The difference between the anticipated output and the measured output;

8. Notations indicating the operability of each entrance door electrical interlock, each electrical or mechanical stop, each source exposure indicator light, and the viewing and intercom system and doors; and

9. The name of the individual who performed the periodic spot-check and the signature of the authorized medical physicist who reviewed the record of the spot-check.

(110) **Records of Periodic Spot-Checks for Remote Afterloader Units.**

(a) A licensee shall retain a record of each spot-check for remote afterloader units required by Rule .05(77) for 3 years.

(b) The record must include, as applicable:

1. The date of the spot-check;

2. The manufacturer's name, model number, and serial number for the remote afterloader unit and source;

3. An assessment of timer accuracy;

4. Notations indicating the operability of each entrance door electrical interlock, radiation monitors, source exposure indicator lights, viewing and intercom systems, and clock and decayed source activity in the unit's computer; and

5. The name of the individual who performed the periodic spot-check and the signature of the authorized medical physicist who reviewed the record of the spot-check.

(111) **Records of Periodic Spot-Checks for Gamma Stereotactic Radiosurgery Units.**

(a) A licensee shall retain a record of each spot-check for gamma stereotactic radiosurgery units required by Rule .05(78) for 3 years.

(b) The record must include:

1. The date of the spot-check;

2. The manufacturer's name, model number, and serial number for the gamma stereotactic radiosurgery unit and the instrument used to measure the output of the unit;

3. An assessment of timer linearity and accuracy;

4. The calculated on-off error;

5. A determination of trunnion centricity;

6. The difference between the anticipated output and the measured output;

7. An assessment of source output against computer calculations;

8. Notations indicating the operability of radiation monitors, helmet microswitchs, emergency timing circuits, emergency off buttons, electrical interlocks, source exposure indicator lights,

viewing and intercom systems, timer termination, treatment table retraction mechanism, and stereotactic frames and localizing devices (trunnions); and

9. The name of the individual who performed the periodic spot-check and the signature of the authorized medical physicist who reviewed the record of the spot-check.

(112) **Records of Additional Technical Requirements for Mobile Remote Afterloader Units.**

(a) A licensee shall retain a record of each check for mobile remote afterloader units required by Rule .05(79) for 3 years.

(b) The record must include:

1. The date of the check;

2. The manufacturer's name, model number, and serial number of the remote afterloader unit;

3. Notations accounting for all sources before the licensee departs from a facility;

4. Notations indicating the operability of each entrance door electrical interlock, radiation monitors, source exposure indicator lights, viewing and intercom system, applicators and source transfer tubes, and source positioning accuracy; and

5. The signature of the individual who performed the check.

(113) **Records of Surveys of Therapeutic Treatment Units.**

(a) A licensee shall maintain a record of radiation surveys of treatment units made in accordance with Rule .05(80) for the duration of use of the unit.

(b) The record must include:

1. The date of the measurements;

2. The manufacturer's name, model number and serial number of the treatment unit, source, and instrument used to measure radiation levels;

3. Each dose rate measured around the source while the unit is in the off position and the average of all measurements; and

4. The signature of the individual who performed the test.

(114) **Records of Five-Year Inspection for Teletherapy and Gamma Stereotactic Surgery Units.**

(a) A licensee shall maintain a record of the five-year inspections for teletherapy and gamma stereotactic radiosurgery units required by Rule .05(81) for the duration of use of the unit.

(b) The record must contain:

1. The inspector's radioactive materials license number;

2. The date of inspection;

3. The manufacturer's name and model number and serial number of both the treatment unit and source;

4. A list of components inspected and serviced, and the type of service; and

5. The signature of the inspector.

Reports

(115) **Reports and Notifications of Misadministrations.**

(a) Other than events that result from intervention by a patient or human research subject, a licensee shall report any event in which the administration of radioactive material or radiation from radioactive material results in:

1. A dose that differs from the prescribed dose by more than 0.05 Sv (5 rem) effective dose equivalent, 0.5 Sv (50 rem) to an organ or tissue, or 0.5 Sv (50 rem) shallow dose equivalent to the skin; and either

(i) The total dose delivered differs from the prescribed dose by 20 percent or more;

(ii) The total dosage delivered differs from the prescribed dosage by 20 percent or more or falls outside the prescribed dosage range; or

(iii) The fractionated dose delivered differs from the prescribed dose, for a single fraction, by 50 percent or more.

2. A dose that exceeds 0.05 Sv (5 rem) effective dose equivalent, 0.5 Sv (50 rem) to an organ or tissue, or 0.5 Sv (50 rem) shallow dose equivalent to the skin from any of the following:

(i) An administration of a wrong radioactive drug;

(ii) An administration of a radioactive drug containing radioactive material by the wrong route of administration;

(iii) An administration of a dose or dosage to the wrong individual or human research subject;

(iv) An administration of a dose or dosage delivered by the wrong mode of treatment; or

(v) A leaking sealed source.

3. A dose to the skin or an organ or tissue other than the treatment site that exceeds by 0.5Sv (50 rem) to an organ or tissue and 50 percent of the dose expected from the administration defined in the written directive (excluding, for permanent implants, seeds that were implanted in

the correct site but migrated outside the treatment site).

(b) A licensee shall report any event resulting from intervention of a patient or human research subject in which the administration of radioactive material or radiation from radioactive material results, or will result in, unintended permanent functional damage to an organ or a physiological system, as determined by a physician.

(c) The licensee shall notify the Department by telephone no later than the next calendar day after discovery of the misadministration.

(d) The licensee shall submit a written report to the Department within 15 days after discovery of the misadministration.

1. The written report must include:

(i) The licensee's name;

(ii) The name of the prescribing physician;

(iii) A brief description of the event;

(iv) Why the event occurred;

(v) The effect, if any, on the individual(s) who received the administration;

(vi) Actions, if any, that have been taken, or are planned, to prevent recurrence;

(vii) Certification that the licensee notified the individual (or the individual's responsible relative or guardian), and if not, why not; and

2. The report may not contain the individual's name or any other information that could lead to identification of the individual.

(e) The licensee shall provide notification of the misadministration to the referring physician and also notify the individual who is the subject of the misadministration no later than 24 hours after its discovery, unless the referring physician personally informs the licensee either that he or she will inform the individual or that, based on medical judgment, telling the individual would be harmful. The licensee is not required to notify the individual without first consulting the referring physician. If the referring physician or the affected individual cannot be reached within 24 hours, the licensee shall notify the individual as soon as possible thereafter. The licensee may not delay any appropriate medical care for the individual, including any necessary remedial care as a result of the misadministration, because of any delay in notification. To meet the requirements of this paragraph, the notification of the individual who is the subject of the misadministration may be made instead to that individual's responsible relative or guardian. If a verbal notification is made, the licensee shall inform the individual or appropriate responsible relative or guardian that a written description of the event can be obtained from the licensee upon request. The licensee shall provide such a written description if requested.

(f) Aside from the notification requirement, nothing in this section affects any rights or duties of licensees and physicians in relation to each other, to individuals affected by the

misadministration, or to that individual's responsible relatives or guardians.

(g) A licensee shall retain a record of a misadministration in accordance with Rule .05(89). A copy of the record required under Rule .05(89) shall be provided to the referring physician if other than the licensee, within 15 days after discovery of the misadministration.

(116) **Report and Notification of a Dose to an Embryo/Fetus or a Nursing Child.**

(a) A licensee shall report any dose to an embryo/fetus that is greater than 5 mSv (500 mrem) dose equivalent that is a result of an administration of radioactive material or radiation from radioactive material to a pregnant individual unless the dose to the embryo/fetus was specifically approved, in advance, by the authorized user.

(b) A licensee shall report any dose to a nursing child that was not specifically approved, in advance, by the authorized user, that is a result of an administration of radioactive material to a breast feeding individual that:

1. Is greater than 5 mSv (500 mrem) total effective dose equivalent; or

2. Has resulted in unintended permanent functional damage to an organ or a physiological system, as determined by a physician.

(c) The licensee shall notify by telephone the Department no later than the next calendar day after discovery of a dose to the embryo/fetus or nursing child that requires a report in Rule .05(116)(a) or (116)(b).

(d) The licensee shall submit a written report to the Department within 15 days after discovery of a dose to the embryo/fetus or nursing child that requires a report in Rule .05(116)(a) or (116)(b).

1. The written report must include:

(i) The licensee's name;

(ii) The name of the prescribing physician;

(iii) A brief description of the event;

(iv) Why the event occurred;

(v) The effect on the embryo/fetus or the nursing child;

(vi) What actions, if any, have been taken, or are planned, to prevent recurrence; and

(vii) Certification that the licensee notified the pregnant individual or mother (or the mother's or child's responsible relative or guardian), and if not, why not.

2. The report must not contain the individual's or child's name or any other information that could lead to identification of the individual or child.

(e) The licensee shall notify the referring physician and also notify the pregnant individual or mother, both hereafter referred to as the mother, no later than 24 hours after of discovery of an event that would require reporting under Rule .05(116)(a) or (116)(b), unless the referring physician personally informs the licensee either that he or she will inform the mother or that, based on medical judgment, telling the mother would be harmful. The licensee is not required to notify the mother without first consulting with the referring physician. If the referring physician or mother cannot be reached within 24 hours, the licensee shall make the appropriate notifications as soon as possible thereafter. The licensee may not delay any appropriate medical care for the embryo/fetus or for the nursing child, including any necessary remedial care as a result of the event, because of any delay in notification. To meet the requirements of this paragraph, the notification may be made to the mother's or child's responsible relative or guardian instead of the mother, when appropriate. If a verbal notification is made, the licensee shall inform the mother, or the mother's or child's responsible relative or guardian, that a written description of the event can be obtained from the licensee upon request. The licensee shall provide such a written description if requested.

(f) A licensee shall retain a record of a dose to an embryo/fetus or a nursing child in accordance with Rule .05(90). A copy of the record required under Rule .05(90) shall be provided to the referring physician, if other than the licensee, within 15 days after discovery of the event.

(117) **Reports of Leaking Sources.** A licensee shall file a report with the Department within 5 days if a leakage test required by Rule .05(33) reveals the presence of 185 Bq (0.005 µCi) or more of removable contamination. The written report must include the model number and serial number if assigned, of the leaking source; the radionuclide and its estimated activity; the results of the test; the date of the test; and the action taken.

(118) **Reports of Patient Departure Prior to Authorized Release.**

(a) A licensee shall notify the Department by telephone immediately upon discovery that a patient or human research subject has departed from the licensee's facility without authorization under Rule .05(37)(a).

(b) The licensee shall submit a written report to the Department within 30 days after discovery of the unauthorized departure. The written report must include:

1. The licensee's name;

2. The date and time of the unauthorized departure;

3. The projected date and time when release would have occurred;

4. The address of the patient's or human research subject's home or anticipated destination following departure;

5. The radionuclide, chemical and physical form and calculated activity at time of release;

6. The apparent reason(s) for the departure prior to authorized release; and

7. A description of any changes in the licensee's patient release criteria or patient instructions

that are designed to avoid a recurrence of such an event.

(119) **Notification of Deceased Patients or Human Research Subjects Containing Radioactive Material.**

(a) The licensee shall notify the Department by telephone immediately upon discovery that a patient or human research subject containing radioactive material has died, and it is possible that any individual could receive exposures in excess of limits specified in Rule .03(5)(i) of this Chapter as a result of the deceased's body.

(b) The licensee shall submit a written report to the Department within 30 days after discovery that the patient or human research subject referenced in (119)(a) has died. The written report must include:

1. The licensee's name;

2. The date of death;

3. The radionuclide, chemical and physical form and calculated activity at time of death; and,

4. The names (or titles) and address(es) of known individuals who might have received exposures exceeding 5 millisievert (500 mrem).

Authority: O.C.G.A. §§ 31-13-1, et seq. **History**. Original Rule entitled “Use of Radionuclides in the Healing Arts” adopted. F. May 2, 1991; eff. May 22, 1991. **Amended**: F. Feb. 24, 1994; eff. Mar. 16, 1994. **Amended**: F. Oct. 4, 1994; eff. Oct. 24, 1994. **Amended**: F. Apr. 16, 1997; eff. May 6, 1997. **Amended**: F. Mar. 29, 2002; eff. Apr. 18, 2002. **Repealed**: New Rule of same title adopted. F. May 30, 2003; eff. July 1, 2003, as specified by the Agency. **Amended:** F. Oct. 17, 2008; eff. Nov. 6, 2008. **Amended:** F. Jan. 8, 2014; eff. Jan. 28, 2014.

391-3-17-.06 Transportation of Radioactive Material.

(1) **General.**

(a) Purpose. The Regulations in this Rule, 391-3-17-.06, establish requirements for packaging, preparation for shipment, and transportation of radioactive material.

(b) Scope. This Rule applies to any licensee authorized by specific or general license issued by the Department, Agreement State, or NRC to receive, possess, use, or transfer licensed material to a carrier for transport of the material outside the site of usage as specified in the license, or transports that material on public highways or public access roads. No provision of this part authorizes possession of licensed material.

(2) **Requirement for License.** No person shall transport radioactive material or deliver radioactive material to a carrier for transport except as authorized in a general or specific license issued by the Department or as exempted in (4).

(3) **Definitions.** As used in this Rule, the following definitions apply:

(a) "A_1" and "A_2" mean, respectively, the maximum activity of special form radioactive material (A_1) and the maximum activity of radioactive material, other than special form material, LSA, and SCO material (A_2), permitted in a Type A package.

(b) "Carrier" means a person engaged in the transportation of passengers or property by land or water as a common, contract, or private carrier, or by civil aircraft.

(c) "Certificate holder" means a person who has been issued a certificate of compliance or other package approval by the U.S. Nuclear Regulatory Commission.

(d) "Certificate of Compliance (CoC)" means the certificate issued by the U.S Nuclear Regulatory Commission, which approves the design of a package for the transportation of radioactive material.

(e) "Close reflection by water" means immediate contact by water of sufficient thickness for maximum reflection of neutrons.

(f) "Closed transport vehicle" means a transport vehicle equipped with a securely attached exterior enclosure that during normal transportation restricts the access of unauthorized persons to the cargo space containing the radioactive material. The enclosure may be either temporary or permanent but shall limit access from top, sides, and ends. In the case of packaged materials, it may be of the "see-through" type.

(g) "Consignment" means each shipment of a package or groups of packages or load of radioactive material offered by a shipper for transport.

(h) "Containment system" means the assembly components of the packaging intended to retain the radioactive material during transport.

(i) "Conveyance" means:

1. For transport by public highway or rail any transport vehicle or large freight container;

2. For transport by water any vessel, or any hold, compartment, or defined deck area of a vessel including any transport vehicle on board the vessel; and

3. For transport by any aircraft.

(j) "Criticality Safety Index (CSI)" means the dimensionless number (rounded up to the next tenth) assigned to and placed on the label of a fissile material package, to designate the degree of control of accumulation of packages containing fissile material during transportation. Determination of the criticality safety index is described in 10 CFR 71.22, 71.23 and 71.59.

(k) "Deuterium" means deuterium and any deuterium compounds, including heavy water, in which the ratio of deuterium atoms to hydrogen atoms exceeds 1:5,000.

(l) "DOT" means the U.S. Department of Transportation.

(m) "Exclusive use" means the sole use of a conveyance by a single consignor and for which all initial, intermediate, and final loading and unloading are carried out in accordance with the direction of the consignor or consignee. The consignor and the carrier must ensure that any loading or unloading is performed by personnel having radiological training and resources appropriate for safe handling of the consignment. The consignor must issue specific instructions, in writing, for maintenance of exclusive use shipment controls, and include them with the shipping paper information provided to the carrier by the consignor.[1]

(n) "Fissile material" means the radionuclides uranium-233, uranium-235, plutonium-239, and plutonium-241, or any combination of these radionuclides. Fissile material means the fissile nuclides themselves, not material containing fissile nuclides. Neither natural nor depleted uranium is fissile material.[2] Unirradiated natural uranium or depleted uranium that has been irradiated in thermal reactors only are not included in this definition. Certain exclusions from fissile material controls are provided in 10 CFR 71.15.

(o) "Graphite" means graphite with a boron equivalent content less than five (5) parts per million and density greater than 1.5 grams per cubic centimeter.

(p) “Indian tribe” means an Indian or Alaska Native tribe, band, nation, pueblo, village, or community that the Secretary of the Interior acknowledges to exist as an Indian tribe pursuant to the Federally Recognized Indian Tribe List Act of 1994, 25 U.S.C. 479a.

(q) "Licensed material" means byproduct, source, or special nuclear material received, possessed, used, or transferred under a general or specific license issued by the U.S. Nuclear Regulatory Commission or an Agreement State pursuant to the regulations in 10 CFR or this Chapter, respectively.

---

[1] The term "exclusive use" is used interchangeably with the terms "sole use" or "full load" in other regulations, such as Title 49 of the Code of Federal Regulations.

[2] Department jurisdiction extends only to special nuclear material if quantities are not sufficient to form a critical mass as defined in Rule .01(2)(xxxx) of these Regulations.

(r) "Low specific activity material" means radioactive material with limited specific activity that satisfies the descriptions and limits set forth below. Shielding materials surrounding the LSA material may not be considered in determining the estimated average specific activity of the package contents. LSA material must be in one of three groups:

1. LSA-I

(i) Ores containing only naturally occurring radionuclides (e.g., uranium, thorium) and Uranium or thorium concentrates of those ores; or

(ii) Solid unirradiated natural or depleted uranium or natural thorium or their solid or liquid compounds or mixtures; or

(iii) Radioactive material, other than fissile material, for which the A_2 value is unlimited; or

(iv) Mill tailings, contaminated earth, concrete, rubble, other debris, and activated material in which the radioactive material is essentially uniformly distributed and, the average specific activity does not exceed 10^{-6} A_2/g.

2. LSA-II

(i) Water with tritium concentration up to 20.0 Ci/L (0.8 TBq/liter); or

(ii) Material in which the radioactivity is essentially uniformly distributed; and the average specific activity does not exceed 10^{-4} A_2/g for solids and gases, and 10^{-5} A_2/g for liquids.

3. LSA-III. Solids (e.g. consolidated wastes, activated materials) in which:

(i) The radioactive material is essentially uniformly distributed throughout a solid or a collection of solid objects, or is essentially uniformly distributed in a solid compact binding agent (such as concrete, bitumen, ceramic, etc);

(ii) The radioactive material is relatively insoluble, or it is intrinsically contained in a relatively insoluble material, so that, even under loss of packaging, the loss of radioactive material per package by leaching, when placed in water for seven days, would not exceed 0.1 A_2; and

(iii) The average specific activity of the solid does not exceed $2x10^{-3}$ A_2/g.

(s) "Low toxicity alpha emitters" means natural uranium, depleted uranium, natural thorium; uranium-235, uranium-238, thorium-232, thorium-228 or thorium-230 when contained in ores or physical or chemical concentrates or tailings; or alpha emitters with a half-life of less than 10 days.

(t) "Maximum normal operating pressure" means the maximum gauge pressure that would develop in the containment system in a period of one year under the heat condition specified in 10 CFR 71.71(c)(1), in the absence of venting, external cooling by an ancillary system, or operational controls during transport.

(u) "Natural thorium" means thorium with the naturally occurring distribution of thorium isotopes (essentially 100 weight percent thorium-232).

(v) "Normal form radioactive material" means radioactive material that has not been demonstrated to qualify as "special form radioactive material."

(w) "Nuclear waste" means a quantity of source, byproduct or special nuclear material[3] required to be in US Nuclear Regulatory Commission-approved specification packaging while transported to, through or across a state boundary to a disposal site, or to a collection point for transport to a disposal site.

(x) "Optimum interspersed hydrogenous moderation" means the presence of hydrogenous material between packages to such an extent that the maximum nuclear reactivity results.

(y) "Package" means the packaging together with its radioactive contents as presented for transport.

1. "Fissile material package or Type AF package, Type BF package, Type B(U)F package, or Type B(M)F package" means a fissile material packaging together with its fissile material contents.

2. "Type A package" means a Type A packaging together with its radioactive contents. A Type A package is defined and must comply with the DOT regulations in 49 CFR Part 173.

3. "Type B package" means a Type B packaging together with its radioactive contents. On approval, a Type B package design is designated by NRC as B(U) unless the package has a maximum normal operating pressure of more than 700 kPa (100 lb/in^2) gauge or a pressure relief device that would allow the release of radioactive material to the environment under the tests specified in 10 CFR Part 71 (hypothetical accident conditions), in which case it will receive a designation B(M). B(U) refers to the need for unilateral approval of international shipments; B(M) refers to the need for multilateral approval of international shipments. There is no distinction made in how packages with these designations may be used in domestic transportation. To determine their distinction for international transportation, see DOT regulations in 49 CFR Part 173. A Type B package approved before September 6, 1983, was designated only as Type B. Limitations on its use are specified in .06(8).

(z) "Packaging" means the assembly of components necessary to ensure compliance with the packaging requirements of this Rule. It may consist of one or more receptacles, absorbent materials, spacing structures, thermal insulation, radiation shielding, and devices for cooling or absorbing mechanical shocks. The vehicle, tie-down system, and auxiliary equipment may be designated as part of the packaging.

(aa) "Regulations of the U.S. Department of Transportation" means the regulations in 49 CFR Parts 100-189 and Parts 390-397.

(bb) "Regulations of the U.S. Nuclear Regulatory Commission" means the regulations in 10 CFR 71 for purposes of this Rule.

[3] The definition of nuclear waste in this Part is used in the same way as in 49 CFR 173.403.

(cc) "Special form radioactive material" means radioactive material that satisfies the following conditions:

1. It is either a single solid piece or is contained in a sealed capsule that can be opened only by destroying the capsule;

2. The piece or capsule has at least one dimension not less than 5 millimeters (0.2 in.); and

3. It satisfies the test requirements specified by the Nuclear Regulatory Commission. A special form encapsulation designed in accordance with the Nuclear Regulatory Commission requirements in effect on June 30, 1983, and constructed prior to July 1, 1985, may continue to be used. A special form encapsulation designed in accordance with the Nuclear Regulatory Commission requirements in effect on March 31, 1996, and constructed prior to April 1, 1998, may continue to be used. A special form encapsulation either designed or constructed after April 1, 1998, must meet requirements of this definition applicable at the time of its design or construction.

(dd) "Specific activity" of a radionuclide means the radioactivity of a radionuclide per unit mass of that nuclide. The specific activity of a material in which the radionuclide is essentially uniformly distributed is the radioactivity per unit mass of the material.

(ee) "Spent nuclear fuel or Spent fuel" means fuel that has been withdrawn from a nuclear reactor following irradiation, has undergone at least one (1) year's decay since being used as a source of energy in a power reactor, and has not been chemically separated into its constituent elements by reprocessing. Spent fuel includes the special nuclear material, byproduct material, source material, and other radioactive materials associated with fuel assemblies.

(ff) "Surface Contaminated Object (SCO)" means a solid object that is not itself classed as radioactive material, but which has radioactive material distributed on any of its surfaces. SCO must be in one of two groups with surface activity not exceeding the following limits:

1. SCO-I: A solid object on which:

(i) The non-fixed contamination on the accessible surface averaged over 300 cm^2 (or the area of the surface if less than 300 cm^2) does not exceed 10^{-4}microcurie/cm^2 (4 Bq/cm^2) for beta and gamma and low toxicity alpha emitters, or 10^{-5} microcurie/cm^2 (0.4 Bq/cm^2) for all other alpha emitters;

(ii) The fixed contamination on the accessible surface averaged over 300 cm^2 (or the area of the surface if less than 300 cm^2) does not exceed 1.0 microcurie/cm^2 ($4x10^4$ Bq/cm^2) for beta and gamma and low toxicity alpha emitters, or 0.1 microcurie/cm^2 ($4x10^3$ Bq/cm^2) for all other alpha emitters; and

(iii) The non-fixed contamination plus the fixed contamination on the inaccessible surface averaged over 300 cm^2 (or the area of the surface if less than 300 cm^2) does not exceed 1.0 microcurie/cm^2 ($4x10^4$ Bq/cm^2) for beta and gamma and low toxicity alpha emitters, or 0.1 microcurie/cm^2 ($4x10^3$ Bq/cm^2) for all other alpha emitters.

2. SCO-II: A solid object on which the limits for SCO-I are exceeded and on which:

(i) The non-fixed contamination on the accessible surface averaged over 300 cm^2 (or the area of the surface if less than 300 cm^2) does not exceed 10^{-2} microcurie/cm^2 (400 Bq/cm^2) for beta and gamma and low toxicity alpha emitters, or 10^{-3} microcurie/cm^2 (40 Bq/cm^2) for all other alpha emitters;

(ii) The fixed contamination on the accessible surface averaged over 300 cm^2 (or the area of the surface if less than 300 cm^2) does not exceed 20 microcurie/cm^2 ($8x10^5$ Bq/cm^2) for beta and gamma and low toxicity alpha emitters, or 2 microcurie/cm^2 ($8x10^4$ Bq/cm^2) for all other alpha emitters; and

(iii) The non-fixed contamination plus the fixed contamination on the inaccessible surface averaged over 300 cm^2 (or the area of the surface if less than 300 cm^2) does not exceed 20 microcurie/cm^2 ($8x10^5$ Bq/cm^2) for beta and gamma and low toxicity alpha emitters, or 2 microcurie/cm^2 ($8x10^4$ Bq/cm^2) for all other alpha emitters.

(gg) "Transport index" means the dimension-less number (rounded up to the next tenth) placed on the label of a package, to designate the degree of control to be exercised by the carrier during transportation. The transportation index is the number expressing the maximum radiation level in millirem per hour at 1 meter from the external surface of the package.

(hh) “Tribal official” means the highest ranking individual that represents Tribal leadership, such as the Chief, President, or Tribal Council leadership.

(ii) "Type A package" means a packaging that, together with its radioactive contents limited to A_1 or A_2 as appropriate, meets the requirements of 49 CFR 173.410 and 173.412 and is designed to retain the integrity of containment and shielding required by this Rule under normal conditions of transport as demonstrated by the tests set forth in 49 CFR 173.465 or 173.466, as appropriate.

(jj) "Type A quantity" means a quantity of radioactive material, the aggregate radioactivity of which does not exceed A_1 for special form radioactive material or A_2 for normal form radioactive material, where A_1 and A_2 are given in Table 4, “A_1 and A_2 Values for Radionuclides" or may be determined by procedures described in (23) of this Rule.

(kk) "Type B package" is defined in Rule 391-3-17-.01(2)(qqq).

(ll) "Type B packaging" means a packaging designed to retain the integrity of containment and shielding when subjected to the normal conditions of transport and hypothetical accident test conditions set forth in 10 CFR Part 71.

(mm) "Type B quantity" means a quantity of radioactive material greater than a Type A quantity.

(nn) "Unirradiated uranium" means uranium containing not more than $2x10^3$ Bq of plutonium per gram of uranium-235, not more than $9x10^6$ Bq of fission products per gram of uranium-235, and not more than $5x10^{-3}$ grams of uranium-236 per gram of uranium-235.

(oo) "Uranium-natural, depleted, enriched" means:

1. Natural uranium means uranium with the naturally occurring distribution of uranium isotopes (approximately 0.711 weight percent uranium-235, and the remainder by weight essentially

uranium-238).

2. Depleted uranium means uranium containing less uranium-235 than the naturally occurring distribution of uranium isotopes.

3. Enriched uranium means uranium containing more uranium-235 than the naturally occurring distribution of uranium isotopes.

(4) **Exemptions.**

(a) Common and contract carriers, freight forwarders, and warehousemen who are subject to the requirements of the U.S. Department of Transportation (DOT) in 49 CFR 170 through 189 or the U.S. Postal Service in the Postal Service Manual (Domestic Mail Manual), Section C-023.9.0, and the U.S. Postal Service, are exempt from the requirements of this Rule to the extent that they transport or store radioactive material in the regular course of their carriage for others or storage incident thereto. Common and contract carriers who are not subject to the requirements of the U.S. Department of Transportation or U.S. Postal Service are subject to (2) of this Rule and other applicable requirements of these Regulations.

(b) Any licensee is exempt from the requirements of this Rule to the extent that the licensee delivers to a carrier for transport a package containing radioactive material having a specific activity not greater than 0.002 microcurie per gram (70 Bq/gm).

(c) Any physician licensed by Georgia to dispense drugs in the practice of medicine is exempt from Rule .06 with respect to transport by the physician of licensed material for use in the practice of medicine. However, any physician operating under this exemption must be licensed under Rule .05.

(d) A licensee is exempt from the requirements of Rule .06 with respect to shipment or carriage of the following low-level materials:

1. Natural material and ores containing naturally occurring radionuclides that are not intended to be processed for use of these radionuclides, provided the activity concentration of the material does not exceed 10 times the values specified in Table 7.

2. Materials for which the activity concentration is not greater than the activity concentration values specified in Table 7, or for which the consignment activity is not greater than the limit for an exempt consignment found in Table 7.

(e) A licensee is exempt from the requirements of Rule .06, other than .06(5) and .06(17), with respect to shipment or carriage of the following packages, providing the packages do not contain any fissile material, or the material is exempt from classification as fissile material in .06(4)(f):

1. A package that contains no more than a Type A quantity of radioactive material;

2. A package transported within the United States that contains no more than 20 Ci (0.74 TBq) of special form plutonium-244; or

3. A package contains LSA or SCO radioactive material, provided that the LSA or SCO material has an external radiation dose of less than or equal to 1 rem/hr (10 mSv/hr) at a

distance of 3 meters from the unshielded material or that the package contains only LSA-I or SCO-I material.

(f) Fissile material meeting the requirements of at least one of the following six paragraphs in this part are exempt from classification as fissile material and from the fissile material package standards of 10 CFR 71.55 and 71.59, but are subject to all other requirements of this part, except as noted.

1. Individual package containing two (2) grams or less of fissile material.

2. Individual or bulk packaging containing fifteen (15) grams or less of fissile material provided the package has at least 200 grams of solid nonfissile material for every gram of fissile material. Lead, beryllium, graphite, and hydrogenous material enriched in deuterium may be present in the package but must not be included in determining the required mass for solid nonfissile material.

3. Low concentrations of solid fissile material commingled with solid nonfissile material, provided that (i) there is at least 2,000 grams of solid nonfissile material for every gram of fissile material, and (ii) there is no more than 180 grams of fissile material distributed within 360 kg of contiguous nonfissile material. Lead, beryllium, graphite, and hydrogenous material enriched in deuterium may be present in the package but must not be included in determining the required mass for solid nonfissile material.

4. Uranium enriched in uranium-235 to a maximum of one (1) percent by weight, and with a total plutonium and uranium-233 content of up to one (1) percent of the mass of uranium-235, provided that the mass of any beryllium, graphite, and hydrogenous material enriched in deuterium constitutes less than five (5) percent of the uranium mass.

5. Liquid solutions of uranyl nitrate enriched in uranium-235 to a maximum of two (2) percent by mass, with a total plutonium and uranium-233 content not exceeding 0.002 percent of the mass of uranium, and with a minimum nitrogen to uranium atomic ratio (N/U) of 2. The material must be contained in at least a DOT Type A package.

6. Packages containing, individually, a total plutonium mass of not more than 1,000 grams, of which not more than twenty (20) percent by mass may consist of plutonium-238, plutonium-241, or any combination of these radionuclides.

(5) **Transportation of Licensed Material.**

(a) Each licensee who transports licensed material outside the site of usage, as specified in a Department license, or where transport is on public highway, or public access road, or who delivers licensed material to a carrier for transport, shall:

1. Comply with the applicable requirements, appropriate to the mode of transport, of the regulations of the US Department of Transportation (DOT).

(i) The licensee shall particularly note DOT regulations in the following areas:

(I) Packaging - 49 CFR Part 173, Subparts A and B and I.

(II) Marking and Labeling - 49 CFR Part 172: Subpart D, and §§ 49 CFR 172.400 through

172.407, §§ 172.436 through 172.440 of Subpart E.

(III) Placarding - 49 CFR Part 172: Subpart F, especially §§ 172.500 through 172.519, 172.556 and Appendices B and C.

(IV) Accident Reporting - 49 CFR Part 171: §§ 171.15 and 171.16.

(V) Shipping Papers and Emergency Information – 49 CFR Part 172, Subpart C and Subpart G.

(VI) Hazardous material employee training - 49 CFR Part 172: Subpart H.

(VII) Security Plans – 49 CFR Part 172: Subpart I.

(VIII) Hazardous material shipper/carrier registration – 49 CFR Part 107: Subpart G.

(ii) The licensee shall also note DOT regulations pertaining to the following modes of transportation:

(I) Rail - 49 CFR Part 174, Subparts A through D and K.

(II) Air - 49 CFR Part 175.

(III) Vessel - 49 CFR Part 176, Subparts A through F and M.

(IV) Public Highway - 49 CFR Part 177 and Parts 390 through 397.

2. Assure that any special instructions needed to safely open the package are sent to or have been made available to the consignee in accordance with Rule 391-3-17-.03(12)(f).

(b) If, for any reason, the regulations of the DOT are not applicable to a shipment of licensed material, the licensee shall conform to the standards and requirements of 49 CFR Parts 170-189 appropriate to the mode of transport to the same extent as if the shipment was subject to the regulations.

(6) **General Licenses for Carriers.**

(a) A general license is hereby issued to any common or contract carrier not exempt under (4) to receive, possess, transport, and store radioactive material in the regular course of their carriage for others or storage incident thereto, provided the transportation and storage is in accordance with the applicable requirements, appropriate to the mode of transport, of the DOT insofar as such requirements relate to the loading and storage of packages, placarding of the transporting vehicle, and incident reporting.[4]

(b) A general license is hereby issued to any private carrier to transport radioactive material, provided the transportation is in accordance with the applicable requirements, appropriate to the mode of transport, of the DOT insofar as such requirements relate to the loading and storage of packages, placarding of the transporting vehicle, and incident reporting.

[4] Notification of an incident shall be filed with, or made to, the Department as prescribed in 49 CFR, regardless of and in addition to notification made to DOT or to other agencies.

(c) Persons who transport radioactive material pursuant to the general licenses in (6)(a) or (b) are exempt from the requirements of Rules 391-3-17-.03 and .07 to the extent that they transport radioactive material.

(7) **General License: NRC-Approved Packages.**

(a) A general license is hereby issued to any licensee to transport, or to deliver to a carrier for transport, licensed material in a package for which a license, certificate of compliance, or other approval has been issued by the U.S. Nuclear Regulatory Commission (NRC).

(b) This general license applies only to a licensee who:

1. Has a copy of the specific license, certificate of compliance, or other approval of the package and has the drawings and other documents referenced in the approval relating to the use and maintenance of the packaging and to the actions to be taken prior to shipment;

2. Complies with the terms and conditions of the license, certificate, or other approval by the Nuclear Regulatory Commission, as applicable, and the applicable requirements of this Rule;

3. Prior to the licensee's first use of the package, has registered with the U.S. Nuclear Regulatory Commission; and

4. Has a quality assurance program required by (22).

(c) The general license in (7)(a) applies only when the package approval authorizes use of the package under this general license.

(d) For a Type B or fissile material package the design of which was approved by NRC before April 1, 1996 the general license is subject to additional restrictions of (8).

(8) **General License: Previously Approved Type B Packages.**

(a) A Type B package previously approved by the NRC, but not designated as B(U), B(M), B(U)F, or B(M)F, in the identification number of the NRC Certificate of Compliance, may be used under the general license of (7) with the following additional limitations:

1 Fabrication of the packaging was satisfactorily completed before August 31, 1986, as demonstrated by application of its model number in accordance with NRC regulations at 10 CFR 71.85(c);

2 A package used for shipment to a location outside the United States is subject to multilateral approval, as defined in DOT regulations at 49 CFR 173.403; and

3. A serial number that uniquely identifies each packaging which conforms to the approved design is assigned to, and legibly and durably marked on, the outside of each packaging.

(b) A Type B(U) package, a Type B(M) package, a low specific activity (LSA) material package or a fissile material package, previously approved by the NRC but without the designation "-85" in the identification number of the NRC certificate of compliance, may be used under the general license of (7) with the following additional conditions:

1. Fabrication of the package is satisfactory completed by April 1,1999 as demonstrated by application of its model number in accordance with NRC regulations at 10 CFR 71.85(c);

2. A package used for shipment to a location outside the United States is subject to multilateral approval as defined in DOT regulations at 49 CFR 173.403 and

3. A serial number which uniquely identifies each packaging which conforms to the approved design is assigned to and legibly and durably marked on the outside of each packaging.

(9) **General License: DOT Specification Container.**

(a) A general license is issued to any licensee of the Department to transport, or to deliver to a carrier for transport, licensed material in a specification container for fissile material or for a Type B quantity of radioactive material as specified in 49 CFR Parts 173 and 178.

(b) This general license applies only to a licensee who:

1. Has a copy of the specification;

2. Complies with the terms and conditions of the specification and the applicable requirements of this Rule; and

3. Has a quality assurance program required by (22).

(c) The general license in (9)(a) is subject to the limitation that the specification container may not be used for a shipment to a location outside the United States, except by multilateral approval, as defined in DOT regulations at 49 CFR 173.403.

(10) **General License: Use of Foreign-Approved Package.**

(a) A general license is issued to any licensee of the Department to transport, or to deliver to a carrier for transport, licensed material in a package the design of which has been approved in a foreign national competent authority certificate which has been revalidated by the DOT as meeting the applicable requirements of 49 CFR 171.12.

(b) This general license applies only to international shipments.

(c) This general license applies only to a licensee who:

1. Has a copy of the applicable certificate, the revalidation, and the drawings and other documents referenced in the certificate relating to the use and maintenance of the packaging and to the actions to be taken prior to shipment;

2. Complies with the terms and conditions of the certificate and revalidation and with the applicable requirements of this Rule; and

3. Has a quality assurance program approved by the NRC.

(11) **General License: Fissile Material, Limited Quantity per Package.**

(a) A general license is hereby issued to any licensee to transport fissile material, or to deliver

fissile material to a carrier for transport, if the material is shipped in accordance with this section. The material must be contained in a Type A package. The Type A package must also meet the DOT requirements of 49 CFR 173.417(a).

(b) This general license applies only to a licensee who has a quality assurance program required by (22).

(c) This general license applies only when a package contains no more than a Type A quantity of fissile material and contains less than 500 grams total of beryllium, graphite, or hydrogenous material enriched in deuterium.

(d) 1. This general license applies only to packages containing fissile material that are labeled with a Criticality Safety Index (CSI), defined as

$$CSI = 10\left[\frac{grams\ of\ \ ^{235}U}{X} + \frac{grams\ of\ \ ^{233}U}{Y} + \frac{grams\ of\ Pu}{Z}\right]$$

where the values of X, Y, and Z used in the CSI equation must be taken from Tables 1 or 2, as appropriate. If Table 2 is used to obtain the value of X, then the values for the terms for uranium-233 and plutonium must be assumed to be zero. Table 1 values for X, Y, and Z must be used to determine the CSI if:

i. Uranium-233 is present in the package;
ii. The mass of plutonium exceeds one (1) percent of the mass of uranium-235;
iii. The uranium is of unknown uranium-235 enrichment or greater than 24 weight percent enrichment; or
iv. Substances having a moderating effectiveness (i.e., an average hydrogen density greater than water) (e.g., certain hydrocarbon oils or plastics) are present in any form, except as polyethylene used for packing or wrapping.

2. In all cases, the Criticality Safety Index must be rounded up to one decimal place and may not exceed 10.0.

3. For a shipment of multiple packages containing fillies material, the sum of the CSIs must be less than or equal to 50 (for shipment on a non-exclusive use conveyance) and less than or equal to 100 (for shipment on an exclusive use conveyance).

Table 1
Mass Limits for General License Packages Containing Mixed Quantities Of Fissile Material or Uranium-235 of Unknown Enrichment

Fissile Material	Fissile Material mass mixed with moderating substances having an average hydrogen density less than or equal to water (in grams)	Fissile Material mass mixed with moderating substances having an average hydrogen density greater than water[(a)] (in grams)
^{235}U (X)	60	38
^{233}U (Y)	43	27
^{239}Pu or ^{241}Pu (Z)	37	24

(a) – When mixtures of moderating substances are present, the lower mass limits shall be used if more than 15 percent of the moderating substances has an average hydrogen density greater than water.

Table 2
Mass Limits for General License Packages Containing Uranium-235 of Known Enrichment

Uranium Enrichment in weight percent of ^{235}U not exceeding	Fissile Material mass of ^{235}U (X) (in grams)
24	60
20	63
15	67
11	72
10	76
9.5	78
9	81
8.5	82
8	85
7.5	88
7	90
6.5	93
6	97
5.5	102
5	108
4.5	114
4	120
3.5	132
3	150
2.5	180
2	246
1.5	408*
1.35	480*
1	1,020*
0.92	1,800*

*- Pursuant to the Department's agreement with the USNRC, jurisdiction extends only to 350 grams of uranium-235.

(12) **General License: Plutonium-Beryllium Special Form Material.**

(a) A general license is hereby issued to any licensee to transport fissile material in the form of plutonium-beryllium (Pu-Be) special form sealed sources, or to deliver Pu-Be sealed sources to a carrier for transport, if the material is shipped in accordance with this section. The material must be contained in a Type A package. The Type A package must also meet the DOT requirements of 49 CFR 173.417(a).

(b) This general license applies only when all of the following requirements are met:

1. The package contains no more than a Type A quantity of radioactive material.

2. The package contains less than 1,000 grams of plutonium, provided that: plutonium-239, plutonium-241, or any combination of these radionuclides, constitutes less than 240 grams of the total quantity of plutonium in the package.

(c) 1. This general license applies only to packages that are labeled with a Criticality Safety Index, calculated by:

CSI = (10 / 24) x (grams ^{239}Pu + grams ^{241}Pu)

where the CSI value is less than or equal to 100 and must be rounded up to the first decimal place.

2. For a shipment of multiple packages containing Pu-Be sealed sources, the sum of the CSIs must be less than or equal to 50 (for shipment on a nonexclusive use conveyance) and less than or equal to 100 (for shipment on an exclusive use conveyance).

(d) The general license has a quality assurance program required by (22).

(13) **Assumptions as to Unknown Properties of Fissile Material.** When the isotopic abundance, mass, concentration, degree of irradiation, degree of moderation, or other pertinent property of fissile material in any package is not known, the licensee shall package the fissile material as if the unknown properties had credible values that will cause the maximum neutron multiplication.

(14) **External Radiation Standards For All Packages.**

(a) Except as provided in (14)(b), each package of radioactive materials offered for transportation must be designed and prepared for shipment so that under conditions normally incident to transportation the radiation level does not exceed 200 mrem/hr (2 mSv/hr) at any point on the external surface of the package, and the transport index does not exceed 10.

(b) A package that exceeds the radiation level limits specified in (14)(a) must be transported by exclusive use shipment only, and the radiation levels for such shipment must not exceed the following during transportation:

1. 200 mrem/hr (2 mSv/hr) on the external surface of the package, unless the following conditions are met, in which case the limit is 1,000 mrem/hr (10 mSv/hr):

(i) The shipment is made in a closed transport vehicle;
(ii) The package is secured within the vehicle so that its position remains fixed during transportation; and
(iii) There are no loading or unloading operations between the beginning and end of the transportation;

2. 200 mrem/hr (2 mSv/hr) at any point on the outer surface of the vehicle, including the top and underside of the vehicle; or in the case of a flat-bed style vehicle, at any point on the vertical planes projected from the outer edges of the vehicle, on the upper surface of the load or enclosure, if used, and on the lower external surface of the vehicle; and

3. 10 mrem/hr (0.1 mSv/hr) at any point two (2) meters (80 inches) from the outer lateral surfaces of the vehicle (excluding the top and underside of the vehicle); or in the case of a flat-bed style vehicle, at any point two (2) meters (6.6 feet) from the vertical planes projected by the outer edges of the vehicle (excluding the top and underside of the vehicle); and

4. 2 mrem/hr (0.02 mSv/hr) in any normally occupied space, except that this provision does not apply to private carriers, if exposed personnel under their control wear radiation dosimetry devices in conformance with Rule 391-3-17-.03(8)(b).

(c) For shipments made under the provisions of (14)(b), the shipper will provide specific written instructions to the carrier for maintenance of the exclusive use shipment controls. The instructions must be included with the shipping paper information.

(d) The written instructions required for exclusive use shipments must be sufficient so that, when followed, they will cause the carrier to avoid actions that will unnecessarily delay delivery or unnecessarily result in increased radiation levels or radiation exposures to transport workers or members of the general public.

(15) **Preliminary Determinations.** Prior to the first use of any packaging for the shipment of radioactive material:

(a) The licensee shall ascertain that there are no defects that could significantly reduce the effectiveness of the packaging;

(b) Where the maximum normal operating pressure will exceed 35 kilopascal (5 lb/in^2) gauge, the licensee shall test the containment system at an internal pressure at least 50 percent higher than the maximum normal operating pressure to verify the capability of that system to maintain its structural integrity at that pressure;

(c) The licensee shall determine that the packaging has been fabricated in accordance with the design approved by the NRC; and

(d) The licensee shall conspicuously and durably mark the packaging with its model number, serial number, gross weight, and a package identification number assigned by the NRC.

(16) **Routine Determinations.** Prior to each shipment of licensed material, the licensee shall determine that:

(a) The package is proper for the contents to be shipped;

(b) The package is in unimpaired physical condition except for superficial defects such as marks or dents;

(c) Each closure device of the packaging, including any required gasket, is properly installed and secured and free of defects;

(d) Any system for containing liquid is adequately sealed and has adequate space or other specified provision for expansion of the liquid;

(e) Any pressure relief device is operable and set in accordance with written procedures;

(f) The package has been loaded and closed in accordance with written procedures;

(g) For fissile material, any moderator or neutron absorber, if required, is present and in proper condition;

(h) Any structural part of the package which could be used to lift or tie down the package during transport is rendered inoperable for that purpose unless it satisfies design requirements specified by 10 CFR 71.45;

(i) The level of non-fixed radioactive contamination on the external surfaces of each package offered for shipment is as low as reasonably achievable.

1. The level of non-fixed radioactive contamination may be determined by wiping an area of 300 square centimeters of the surface concerned with an absorbent material, using moderate pressure, and measuring the activity on the wiping material. Sufficient measurements must be taken in the most appropriate locations to yield a representative assessment of the removable contamination levels. Except as provided in (16)(i)2., the amount of radioactivity measured on any single wiping material, when averaged over the surface wiped, must not exceed the limits given in Table 3 at any time during transport. Other methods of assessment of equal or greater efficiency may be used. When other methods are used, the detection efficiency of the method used must be taken into account and in no case may the removable contamination on the external surfaces of the package exceed 10 times the limits listed in Table 3.

2. In the case of packages transported as exclusive use shipments by rail or highway only, the non-fixed radioactive contamination at any time during transport must not exceed 10 times the levels prescribed in (16)(i)1. The levels at the beginning of transport must not exceed the levels in (16)(i)1.;

Table 3
Non-Fixed (Removable) External Radioactive Contamination-Wipe Limits

	Maximum Permissible limits		
Contaminant	$\mu Ci/cm^2$	dpm/cm^2	Bq/cm^2
Beta-/gamma-emitting radionuclides; and low toxicity alpha emitters.....	10^{-5}	22	0.4
All other alpha-emitting radionuclides.....	10^{-6}	2.2	0.04

(j) External radiation levels around the package and around the vehicle, if applicable, will not exceed 200 millirem per hour (2 mSv/hr) at any point on the external surface of the package at any time during transportation. The transport index shall not exceed 10.

(k) For package transported as exclusive use by rail, highway, or water, radiation levels external to the package may exceed the limits specified in (16)(j). but shall not exceed any of the following:

1. 200 millirem per hour (2 mSv/hr) on the accessible external surface of the package unless the following conditions are met, in which case the limit is 1,000 millirem per hour (10 mSv/hr):

(i) The shipment is made in a closed transport vehicle,

(ii) Provisions are made to secure the package so that its position within the vehicle remains fixed during transportation, and

(iii) There are no loading or unloading operations between the beginning and end of the transportation;

2. 200 millirem per hour (2 mSv/hr) at any point on the outer surface of the vehicle, including the top and underside of the vehicle, or, in the case of a flat-bed style vehicle with a personnel barrier[5], at any point on the vertical planes projected from the outer edges of the vehicle, on the upper surface of the load (or enclosure, if used), and on the lower external surface of the vehicle;

3. 10 millirem per hour (0.1 mSv/hr) at any point 2 meters from the vertical planes represented by the outer lateral surfaces of the vehicle; or in the case of a flat-bed style vehicle, at any point 2 meters from the vertical planes projected from the outer edges of the vehicle; and

4. 2 millirem per hour (0.02 mSv/hr) in any normally occupied positions of the vehicle, except that this provision does not apply to private motor carriers when persons occupying these positions are provided with special health supervision, personnel radiation exposure monitoring devices, and training in accordance with 391-3-17-.07(3) of this Chapter; and

(l) A package must be prepared for transport so that in still air at 100 degrees Fahrenheit (38 degrees Celsius) and in the shade, no accessible surface of a package would have a temperature exceeding 122 degrees Fahrenheit (50 degrees Celsius) in a nonexclusive use shipment or 185 degrees Fahrenheit (85 degrees Celsius) in an exclusive use shipment. Accessible package surface temperatures shall not exceed these limits at any time during transportation.

(m) A package may not incorporate a feature intended to allow continuous venting during transport.

(17) **Air Transport of Plutonium.** Notwithstanding the provisions of any general licenses and notwithstanding any exemptions stated directly in this Rule or included indirectly by citation of the DOT regulations, as may be applicable, the licensee shall assure that plutonium in any form is not transported by air, or delivered to a carrier for air transport, unless:

(a) The plutonium is contained in a medical device designed for individual human application;

(b) The plutonium is contained in a material in which the specific activity is not greater than the activity concentration values for plutonium as specified in Table 7, and in which the radioactivity is essentially uniformly distributed;

[5] A flat-bed style vehicle with a personnel barrier shall have radiation levels determined at vertical planes. If no personnel barrier is in place, the package cannot exceed 200 millirem per hour (2 mSv/hr) at any accessible surface.

(c) The plutonium is shipped in a single package containing no more than an A_2 quantity of plutonium in any isotope or form and is shipped in accordance with (5); or

(d) The plutonium is shipped in a package specifically authorized, in the certificate of compliance, issued by the Nuclear Regulatory Commission, for the shipment of plutonium by air and the licensee requires, through special arrangement with the carrier, compliance with 49 CFR 175.704, the US Department of Transportation regulations applicable to the air transport of plutonium.

(18) **Opening instructions.** Before delivery of a package to a carrier for transport, the licensee shall ensure that any special instructions needed to safely open the package have been sent to, or otherwise made available to, the consignee for the consignee's use in accordance with Rule 391-3-17-.03(12)(f).

(19) **Shipment Records.** Each licensee shall maintain for a period of three years after shipment a record of each shipment of licensed material not exempt under (4), showing, where applicable:

(a) Identification of the packaging by model number;

(b) Verification that there were no significant defects in the packaging, as shipped;

(c) Volume and identification of coolant;

(d) Type and quantity of licensed material in each package, and the total quantity of each shipment;

(e) Date of the shipment;

(f) Name and address of the transferee;

(g) Address to which the shipment was made; and

(h) Results of the determinations required by (15) and the conditions of the package approval.

(20) **Reports.** The licensee shall report to the Department within 30 days:

(a) Any instance in which there is significant reduction in the effectiveness of any authorized packaging during use; and

(b) Details of any defects with safety significance in the packaging after first use, with the means employed to repair the defects and prevent their recurrence.

(21) **Advance Notification of Transport of Nuclear Waste.**

(a) Prior to the transport of any licensed material outside of the confines of the licensee's facility or other place of use or storage, or prior to the delivery of any nuclear waste to a carrier for transport, each licensee shall provide advance notification of such transport to the governor, or

governor's designee,[6] of each state within or through which the licensed material will be transported.

1. As specified in paragraphs (b), (c), and (d) of this section, each licensee shall provide advance notification to the governor of a State, or the governor's designee, of the shipment of licensed material, within or across the boundary of the State, before the transport, or delivery to a carrier, for transport, of licensed material outside the confines of the licensee's plant or other place of use or storage.

2. As specified in paragraphs (b), (c), and (d) of this section, after June 11, 2013, each licensee shall provide advance notification to the Tribal official of participating Tribes referenced in paragraph (d)3.(iii) of this section, or the official's designee, of the shipment of licensed material, within or across the boundary of the Tribe's reservation, before the transport, or delivery to a carrier, for transport, of licensed material outside the confines of the licensee's plant or other place of use or storage.

(b) Advance notification is also required when:

1. The licensed material is required to be in Type B packaging for transportation;

2 The licensed material is being transported into, within, or through, a state en route to a disposal facility or to a collection point for transport to a disposal facility; and

3. The quantity of licensed material in a single package exceeds the least of the following:

(i) 3000 times the A_1 value of the radionuclides as specified in Table 4, for special form radioactive material;

(ii) 3000 times the A_2 value of the radionuclides as specified in Table 4 for normal form radioactive material; or

(iii) 27,000 Ci (1000 TBq);

(c) Each advance notification required by .06(21)(a) shall contain the following information:

1. The name, address, and telephone number of the shipper, carrier, and receiver of the shipment;

2. A description of the nuclear waste contained in the shipment as required by 49 CFR 172.202 and 172.203(d);

3. The point of origin of the shipment and the seven-day period during which departure of the shipment is estimated to occur;

4. The seven-day period during which arrival of the shipment at state boundaries or Tribal reservation boundaries is estimated to occur;

[6] A list of the mailing addresses of the governors and governors' designees is available upon request from the Director, State Programs, NRC, Washington, D.C., 20555.The list will be published in the Federal Register on or about June 30 of each year to reflect any changes in information.

5. The destination of the shipment, and the seven-day period during which arrival of the shipment is estimated to occur; and

6. A point of contact with a telephone number for current shipment information.

(d) Procedures for Submitting Advance Notification:

1. The notification required by .06(21)(a) shall be made in writing to the office of each appropriate governor, or governor's designee, to the office of each appropriate Tribal official or Tribal official’s designee, and to the Department.

2. A notification delivered by mail must be postmarked at least seven days before the beginning of the seven-day period during which departure of the shipment is estimated to occur.

3. A notification delivered by any other means than mail must reach the office of the governor or of the governor's designee or the Tribal official or Tribal official's designee at least four days before the beginning of the seven-day period during which departure of the shipment is estimated to occur.

(i) A list of the names and mailing addresses of the governors' designees receiving advance notification of transportation of nuclear waste was published in the Federal Register on June 30, 1995 (60 FR 34306).

(ii) The list of governor's designees and Tribal official's designees of participating Tribes will be published annually in the Federal Register on or about June 30th to reflect any changes in information.

(iii) A list of the names and mailing addresses of the governors' designees and Tribal officials' designees of participating Tribes is available on request from the Director, Division of Intergovernmental Liaison and Rulemaking, Office of Federal and State Materials and Environmental Management Programs, U.S. Nuclear Regulatory Commission, Washington, DC 20555-0001.

4. A copy of the notification shall be retained by the licensee for three years.

(e) A licensee who finds that schedule information previously furnished to a governor or governor's designee or a Tribal official or Tribal official's designee, in accordance with this section, will not be met, shall telephone a responsible individual in the office of the governor of the State or of the governor's designee or the Tribal official or the Tribal official's designee and inform that individual of the extent of the delay beyond the schedule originally reported. The licensee shall maintain a record of the name of the individual contacted for three years.

(f) Each licensee who cancels a nuclear waste shipment for which advance notification has been sent shall send a cancellation notice to the governor of each State or to the governor's designee previously notified, each Tribal official or to the Tribal official's designee previously notified, and to the Department.

(22) **Quality Assurance Requirements.**

(a) Unless otherwise authorized by the Department, each licensee shall establish, maintain,

and execute a quality assurance program to verify by procedures such as checking, auditing, and inspection that deficiencies, deviations, and defective material and equipment relating to the shipment of packages containing radioactive material are promptly identified and corrected.

(b) The licensee shall identify the material and components to be covered by the quality assurance program.

(c) Each licensee shall document the quality assurance program by written procedures or instructions and shall carry out the program in accordance with those procedures throughout the period during which packaging is used.

(d) Prior to the use of any package for the shipment of radioactive material, each licensee shall obtain approval by the Department of its quality assurance program.

(e) The licensee shall maintain sufficient written records to demonstrate compliance with the quality assurance program. Records of quality assurance pertaining to the use of a package for shipment of radioactive material shall be maintained for a period of three years after shipment.

(f) Radiography containers. A program for transport container inspection and maintenance limited to radiographic exposure devices, source changers, or packages transporting these devices and meeting the requirements of rule 391-3-17-.04(11)(d) and (e) or equivalent Agreement State requirement, is deemed to satisfy the requirements of 10 CFR 71.12(b) and .06 (21).

(23) **Determination of A1 and A2.** _

(a) Values of A_1 and A_2 for individual radionuclides, which are the bases for many activity limits elsewhere in these regulations, are given in Table 4. The curie (Ci) values specified are obtained by converting from the Terabecquerel (TBq) value. The curie values are expressed to three significant figures to assure that the difference in the TBq and Ci quantities is one tenth of one percent or less. Where values of A_1 or A_2 are unlimited, it is for radiation control purposes only. For nuclear criticality safety, some materials are subject to controls placed on fissile material.

(b) 1. For individual radionuclides whose identities are known but are not listed in Table 4, the A_1 and A_2 values contained in Table 5 may be used. Otherwise, the licensee shall obtain prior Department approval of the A_1 and A_2 values for radionuclides not listed in Table 4, before shipping the material

2. For individual radionuclides whose identities are known but are not listed in Table 7, the exempt material activity concentration and exempt consignment activity values contained in Table 5 may be used. Otherwise, the licensee shall obtain prior Department approval of the exempt material activity concentration and exempt consignment activity values for radionuclides not listed in Table 7, before shipping the material.

(c) In calculations of A_1 and A_2 for a radionuclide not in Table 4, a single radioactive decay chain, in which radionuclides are present in their naturally occurring proportions, and in which no daughter nuclide has a half-life either longer than 10 days, or longer than that of

the parent nuclide, shall be considered as a single radionuclide, and the activity to be taken into account, and the A_1 and A_2 value to be applied shall be those corresponding to the parent nuclide of that chain. In the case of radioactive decay chains in which any daughter nuclide has a half-life either longer than ten days, or greater than of the parent nuclide, the parent and those daughters nuclides shall be considered as a mixture of different nuclides.

(d) Mixtures of radionuclides.

1. For mixture of radionuclides whose identities and respective activities are known, following conditions apply:

(i) For a special form radioactive material, the maximum quantity transported in a Type A package:

$$\sum_i \frac{B(i)}{A_1(i)} \leq 1$$

(ii) For normal form radioactive material, maximum quantity transported in a Type A package:

$$\sum_i \frac{B(i)}{A_2(i)} \leq 1$$

where B(i) is the activity of radionuclide i and $A_1(i)$ and $A_2(i)$ are the A_1 and A_2 values for radionuclide i, respectively.

Alternatively an A_1 value for mixtures of special form material may be as follows:

A_1 for mixture =

$$\frac{1}{\sum_i \frac{f(i)}{A_1(i)}}$$

where f(i) is the fraction of activity of nuclide i in the mixture and A_1 (i) is the appropriate A_1 value for nuclide i.

An A_2 value for mixtures of normal form material may be determined as follows:

A_2 for mixture =

$$\frac{1}{\sum_i \frac{f(i)}{A_2(i)}}$$

where f(i) is the fraction of activity of nuclide i in the mixture $A_2(i)$ is the appropriate A_2 value for nuclide i.

(e) The exempt activity concentration for mixtures of radionuclides may be determined as

follows:

Exempt activity concentration for mixture =

$$\frac{1}{\sum_i \frac{f(i)}{[A](i)}}$$

where f(i) is the fraction activity concentration of radionuclide (i) in the mixture and [A] is the activity concentration for exempt material containing radionuclide (i).

(f) The activity limit for an exempt consignment for mixtures of radionuclides may be determined as follows:

Exempt consignment activity limit for mixture =

$$\frac{1}{\sum_i \frac{f(i)}{A(i)}}$$

where f(i) is the fraction of activity of radionuclide (i) in the mixture and [A] is the activity limit for exempt consignments for radionuclide (i).

(g) When the identity of each radionuclide is known, but the individual activities of some of the radionuclides are not known, the radionuclides may be grouped, and the lowest A_1 or A_2 value, as appropriate, for the radionuclides in each group may be used in applying formulas above. Groups may be based on the total alpha activity and the total beta/gamma activity when these are known, using the lowest A_1 or A_2 values for the alpha emitters and beta/gamma emitters.

Table 4 - A_1 and A_2 VALUES FOR RADIONUCLIDES

Symbol of radionuclide	Element and atomic number	A_1 (TBq)	A_1(Ci)[b]	A_2 (TBq)	A_2(Ci)[b]	Specific activity (TBq/g)	(Ci/g)
Ac-225 (a)	Actinium (89)	$8.0X10^{-1}$	$2.2X10^{1}$	$6.0X10^{-3}$	$1.6X10^{-1}$	$2.1X10^{3}$	$5.8X10^{4}$
Ac-227 (a)		$9.0X10^{-1}$	$2.4X10^{1}$	$9.0X10^{-5}$	$2.4X10^{-3}$	2.7	$7.2X10^{1}$
Ac-228		$6.0X10^{-1}$	$1.6X10^{1}$	$5.0X10^{-1}$	$1.4X10^{1}$	$8.4X10^{4}$	$2.2X10^{6}$
Ag-105	Silver (47)	2.0	$5.4X10^{1}$	2.0	$5.4X10^{1}$	$1.1X10^{3}$	$3.0X10^{4}$
Ag-108m (a)		$7.0X10^{-1}$	$1.9X10^{1}$	$7.0X10^{-1}$	$1.9X10^{1}$	$9.7X10^{-1}$	$2.6X10^{1}$
Ag-110m (a)		$4.0X10^{-1}$	$1.1X10^{1}$	$4.0X10^{-1}$	$1.1X10^{1}$	$1.8X10^{2}$	$4.7X10^{3}$
Ag-111		2.0	$5.4X10^{1}$	$6.0X10^{-1}$	$1.6X10^{1}$	$5.8X10^{3}$	$1.6X10^{5}$
Al-26	Aluminum (13)	$1.0X10^{-1}$	2.7	$1.0X10^{-1}$	2.7	$7.0X10^{-4}$	$1.9X10^{-2}$
Am-241	Americium (95)	$1.0X10^{1}$	$2.7X10^{2}$	$1.0X10^{-3}$	$2.7X10^{-2}$	$1.3X10^{-1}$	3.4
Am-242m (a)		$1.0X10^{1}$	$2.7X10^{2}$	$1.0X10^{-3}$	$2.7X10^{-2}$	$3.6X10^{-1}$	$1.0X10^{1}$
Am-243 (a)		5.0	$1.4X10^{2}$	$1.0X10^{-3}$	$2.7X10^{-2}$	$7.4X10^{-3}$	$2.0X10^{-1}$
Ar-37	Argon (18)	$4.0X10^{1}$	$1.1X10^{3}$	$4.0X10^{1}$	$1.1X10^{3}$	$3.7X10^{3}$	$9.9X10^{4}$
Ar-39		$4.0X10^{1}$	$1.1X10^{3}$	$2.0X10^{1}$	$5.4X10^{2}$	1.3	$3.4X10^{1}$
Ar-41		$3.0X10^{-1}$	8.1	$3.0X10^{-1}$	8.1	$1.5X10^{6}$	$4.2X10^{7}$
As-72	Arsenic (33)	$3.0X10^{-1}$	8.1	$3.0X10^{-1}$	8.1	$6.2X10^{4}$	$1.7X10^{6}$
As-73		$4.0X10^{1}$	$1.1X10^{3}$	$4.0X10^{1}$	$1.1X10^{3}$	$8.2X10^{2}$	$2.2X10^{4}$
As-74		1.0	$2.7X10^{1}$	$9.0X10^{-1}$	$2.4X10^{1}$	$3.7X10^{3}$	$9.9X10^{4}$
As-76		$3.0X10^{-1}$	8.1	$3.0X10^{-1}$	8.1	$5.8X10^{4}$	$1.6X10^{6}$
As-77		$2.0X10^{1}$	$5.4X10^{2}$	$7.0X10^{-1}$	$1.9X10^{1}$	$3.9X10^{4}$	$1.0X10^{6}$
At-211 (a)	Astatine (85)	$2.0X10^{1}$	$5.4X10^{2}$	$5.0X10^{-1}$	$1.4X10^{1}$	$7.6X10^{4}$	$2.1X10^{6}$
Au-193	Gold (79)	7.0	$1.9X10^{2}$	2.0	$5.4X10^{1}$	$3.4X10^{4}$	$9.2X10^{5}$
Au-194		1.0	$2.7X10^{1}$	1.0	$2.7X10^{1}$	$1.5X10^{4}$	$4.1X10^{5}$
Au-195		$1.0X10^{1}$	$2.7X10^{2}$	6.0	$1.6X10^{2}$	$1.4X10^{2}$	$3.7X10^{3}$
Au-198		1.0	$2.7X10^{1}$	$6.0X10^{-1}$	$1.6X10^{1}$	$9.0X10^{3}$	$2.4X10^{5}$
Au-199		$1.0X10^{1}$	$2.7X10^{2}$	$6.0X10^{-1}$	$1.6X10^{1}$	$7.7X10^{3}$	$2.1X10^{5}$
Ba-131 (a)	Barium (56)	2.0	$5.4X10^{1}$	2.0	$5.4X10^{1}$	$3.1X10^{3}$	$8.4X10^{4}$
Ba-133		3.0	$8.1X10^{1}$	3.0	$8.1X10^{1}$	9.4	$2.6X10^{2}$
Ba-133m		$2.0X10^{1}$	$5.4X10^{2}$	$6.0X10^{-1}$	$1.6X10^{1}$	$2.2X10^{4}$	$6.1X10^{5}$
Ba-140 (a)		$5.0X10^{-1}$	$1.4X10^{1}$	$3.0X10^{-1}$	8.1	$2.7X10^{3}$	$7.3X10^{4}$
Be-7	Beryllium (4)	$2.0X10^{1}$	$5.4X10^{2}$	$2.0X10^{1}$	$5.4X10^{2}$	$1.3X10^{4}$	$3.5X10^{5}$
Be-10		$4.0X10^{1}$	$1.1X10^{3}$	$6.0X10^{-1}$	$1.6X10^{1}$	$8.3X10^{-4}$	$2.2X10^{-2}$
Bi-205	Bismuth (83)	$7.0X10^{-1}$	$1.9X10^{1}$	$7.0X10^{-1}$	$1.9X10^{1}$	$1.5X10^{3}$	$4.2X10^{4}$
Bi-206		$3.0X10^{-1}$	8.1	$3.0X10^{-1}$	8.1	$3.8X10^{3}$	$1.0X10^{5}$
Bi-207		$7.0X10^{-1}$	$1.9X10^{1}$	$7.0X10^{-1}$	$1.9X10^{1}$	1.9	$5.2X10^{1}$
Bi-210		1.0	$2.7X10^{1}$	$6.0X10^{-1}$	$1.6X10^{1}$	$4.6X10^{3}$	$1.2X10^{5}$
Bi-210m (a)		$6.0X10^{-1}$	$1.6X10^{1}$	$2.0X10^{-2}$	$5.4X10^{-1}$	$2.1X10^{-5}$	$5.7X10^{-4}$

Symbol of radionuclide	Element and atomic number	A_1 (TBq)	A_1(Ci)[b]	A_2 (TBq)	A_2(Ci)[b]	Specific activity (TBq/g)	(Ci/g)
Bi-212 (a)		$7.0X10^{-1}$	$1.9X10^{1}$	$6.0X10^{-1}$	$1.6X10^{1}$	$5.4X10^{5}$	$1.5X10^{7}$
Bk-247	Berkelium (97)	8.0	$2.2X10^{2}$	$8.0X10^{-4}$	$2.2X10^{-2}$	$3.8X10^{-2}$	1.0
Bk-249 (a)		$4.0X10^{1}$	$1.1X10^{3}$	$3.0X10^{-1}$	8.1	$6.1X10^{1}$	$1.6X10^{3}$
Br-76	Bromine (35)	$4.0X10^{-1}$	$1.1X10^{1}$	$4.0X10^{-1}$	$1.1X10^{1}$	$9.4X10^{4}$	$2.5X10^{6}$
Br-77		3.0	$8.1X10^{1}$	3.0	$8.1X10^{1}$	$2.6X10^{4}$	$7.1X10^{5}$
Br-82		$4.0X10^{-1}$	$1.1X10^{1}$	$4.0X10^{-1}$	$1.1X10^{1}$	$4.0X10^{4}$	$1.1X10^{6}$
C-11	Carbon (6)	1.0	$2.7X10^{1}$	$6.0X10^{-1}$	$1.6X10^{1}$	$3.1X10^{7}$	$8.4X10^{8}$
C-14		$4.0X10^{1}$	$1.1X10^{3}$	3.0	$8.1X10^{1}$	$1.6X10^{-1}$	4.5
Ca-41	Calcium (20)	Unlimited	Unlimited	Unlimited	Unlimited	$3.1X10^{-3}$	$8.5X10^{-2}$
Ca-45		$4.0X10^{1}$	$1.1X10^{3}$	1.0	$2.7X10^{1}$	$6.6X10^{2}$	$1.8X10^{4}$
Ca-47 (a)		3.0	$8.1X10^{1}$	$3.0X10^{-1}$	8.1	$2.3X10^{4}$	$6.1X10^{5}$
Cd-109	Cadmium (48)	$3.0X10^{1}$	$8.1X10^{2}$	2.0	$5.4X10^{1}$	$9.6X10^{1}$	$2.6X10^{3}$
Cd-113m		$4.0X10^{1}$	$1.1X10^{3}$	$5.0X10^{-1}$	$1.4X10^{1}$	8.3	$2.2X10^{2}$
Cd-115 (a)		3.0	$8.1X10^{1}$	$4.0X10^{-1}$	$1.1X10^{1}$	$1.9X10^{4}$	$5.1X10^{5}$
Cd-115m		$5.0X10^{-1}$	$1.4X10^{1}$	$5.0X10^{-1}$	$1.4X10^{1}$	$9.4X10^{2}$	$2.5X10^{4}$
Ce-139	Cerium (58)	7.0	$1.9X10^{2}$	2.0	$5.4X10^{1}$	$2.5X10^{2}$	$6.8X10^{3}$
Ce-141		$2.0X10^{1}$	$5.4X10^{2}$	$6.0X10^{-1}$	$1.6X10^{1}$	$1.1X10^{3}$	$2.8X10^{4}$
Ce-143		$9.0X10^{-1}$	$2.4X10^{1}$	$6.0X10^{-1}$	$1.6X10^{1}$	$2.5X10^{4}$	$6.6X10^{5}$
Ce-144 (a)		$2.0X10^{-1}$	5.4	$2.0X10^{-1}$	5.4	$1.2X10^{2}$	$3.2X10^{3}$
Cf-248	Californium (98)	$4.0X10^{1}$	$1.1X10^{3}$	$6.0X10^{-3}$	$1.6X10^{-1}$	$5.8X10^{1}$	$1.6X10^{3}$
Cf-249		3.0	$8.1X10^{1}$	$8.0X10^{-4}$	$2.2X10^{-2}$	$1.5X10^{-1}$	4.1
Cf-250		$2.0X10^{1}$	$5.4X10^{2}$	$2.0X10^{-3}$	$5.4X10^{-2}$	4.0	$1.1X10^{2}$
Cf-251		7.0	$1.9X10^{2}$	$7.0X10^{-4}$	$1.9X10^{-2}$	$5.9X10^{-2}$	1.6
Cf-252 (h)		$5.0X10^{-2}$	1.4	$3.0X10^{-3}$	$8.1X10^{-2}$	$2.0X10^{1}$	$5.4X10^{2}$
Cf-253 (a)		$4.0X10^{1}$	$1.1X10^{3}$	$4.0X10^{-2}$	1.1	$1.1X10^{3}$	$2.9X10^{4}$
Cf-254		$1.0X10^{-3}$	$2.7X10^{-2}$	$1.0X10^{-3}$	$2.7X10^{-2}$	$3.1X10^{2}$	$8.5X10^{3}$
Cl-36	Chlorine (17)	$1.0X10^{1}$	$2.7X10^{2}$	$6.0X10^{-1}$	$1.6X10^{1}$	$1.2X10^{-3}$	$3.3X10^{-2}$
Cl-38		$2.0X10^{-1}$	5.4	$2.0X10^{-1}$	5.4	$4.9X10^{6}$	$1.3X10^{8}$
Cm-240	Curium (96)	$4.0X10^{1}$	$1.1X10^{3}$	$2.0X10^{-2}$	$5.4X10^{-1}$	$7.5X10^{2}$	$2.0X10^{4}$
Cm-241		2.0	$5.4X10^{1}$	1.0	$2.7X10^{1}$	$6.1X10^{2}$	$1.7X10^{4}$
Cm-242		$4.0X10^{1}$	$1.1X10^{3}$	$1.0X10^{-2}$	$2.7X10^{-1}$	$1.2X10^{2}$	$3.3X10^{3}$
Cm-243		9.0	$2.4X10^{2}$	$1.0X10^{-3}$	$2.7X10^{-2}$	$1.9X10^{-3}$	$5.2X10^{1}$
Cm-244		$2.0X10^{1}$	$5.4X10^{2}$	$2.0X10^{-3}$	$5.4X10^{-2}$	3.0	$8.1X10^{1}$
Cm-245		9.0	$2.4X10^{2}$	$9.0X10^{-4}$	$2.4X10^{-2}$	$6.4X10^{-3}$	$1.7X10^{-1}$
Cm-246		9.0	$2.4X10^{2}$	$9.0X10^{-4}$	$2.4X10^{-2}$	$1.1X10^{-2}$	$3.1X10^{-1}$
Cm-247 (a)		3.0	$8.1X10^{1}$	$1.0X10^{-3}$	$2.7X10^{-2}$	$3.4X10^{-6}$	$9.3X10^{-5}$
Cm-248		$2.0X10^{-2}$	$5.4X10^{-1}$	$3.0X10^{-4}$	$8.1X10^{-3}$	$1.6X10^{-4}$	$4.2X10^{-3}$
Co-55	Cobalt (27)	$5.0X10^{-1}$	$1.4X10^{1}$	$5.0X10^{-1}$	$1.4X10^{1}$	$1.1X10^{5}$	$3.1X10^{6}$

Symbol of radionuclide	Element and atomic number	A_1 (TBq)	A_1(Ci)[b]	A_2 (TBq)	A_2(Ci)[b]	Specific activity (TBq/g)	(Ci/g)
Co-56		$3.0X10^{-1}$	8.1	$3.0X10^{-1}$	8.1	$1.1X10^{3}$	$3.0X10^{4}$
Co-57		$1.0X10^{1}$	$2.7X10^{2}$	$1.0X10^{1}$	$2.7X10^{2}$	$3.1X10^{2}$	$8.4X10^{3}$
Co-58		1.0	$2.7X10^{1}$	1.0	$2.7X10^{1}$	$1.2X10^{3}$	$3.2X10^{4}$
Co-58m		$4.0X10^{1}$	$1.1X10^{3}$	$4.0X10^{1}$	$1.1X10^{3}$	$2.2X10^{5}$	$5.9X10^{6}$
Co-60		$4.0X10^{-1}$	$1.1X10^{1}$	$4.0X10^{-1}$	$1.1X10^{1}$	$4.2X10^{1}$	$1.1X10^{3}$
Cr-51	Chromium (24)	$3.0X10^{1}$	$8.1X10^{2}$	$3.0X10^{1}$	$8.1X10^{2}$	$3.4X10^{3}$	$9.2X10^{4}$
Cs-129	Cesium (55)	4.0	$1.1X10^{2}$	4.0	$1.1X10^{2}$	$2.8X10^{4}$	$7.6X10^{5}$
Cs-131		$3.0X10^{1}$	$8.1X10^{2}$	$3.0X10^{1}$	$8.1X10^{2}$	$3.8X10^{3}$	$1.0X10^{5}$
Cs-132		1.0	$2.7X10^{1}$	1.0	$2.7X10^{1}$	$5.7X10^{3}$	$1.5X10^{5}$
Cs-134		$7.0X10^{-1}$	$1.9X10^{1}$	$7.0X10^{-1}$	$1.9X10^{1}$	$4.8X10^{1}$	$1.3X10^{3}$
Cs-134m		$4.0X10^{1}$	$1.1X10^{3}$	$6.0X10^{-1}$	$1.6X10^{1}$	$3.0X10^{5}$	$8.0X10^{6}$
Cs-135		$4.0X10^{1}$	$1.1X10^{3}$	1.0	$2.7X10^{1}$	$4.3X10^{-5}$	$1.2X10^{-3}$
Cs-136		$5.0X10^{-1}$	$1.4X10^{1}$	$5.0X10^{-1}$	$1.4X10^{1}$	$2.7X10^{3}$	$7.3X10^{4}$
Cs-137 (a)		2.0	$5.4X10^{1}$	$6.0X10^{-1}$	$1.6X10^{1}$	3.2	$8.7X10^{1}$
Cu-64	Copper (29)	6.0	$1.6X10^{2}$	1.0	$2.7X10^{1}$	$1.4X10^{5}$	$3.9X10^{6}$
Cu-67		$1.0X10^{1}$	$2.7X10^{2}$	$7.0X10^{-1}$	$1.9X10^{1}$	$2.8X10^{4}$	$7.6X10^{5}$
Dy-159	Dysprosium (66)	$2.0X10^{1}$	$5.4X10^{2}$	$2.0X10^{1}$	$5.4X10^{2}$	$2.1X10^{2}$	$5.7X10^{3}$
Dy-165		$9.0X10^{-1}$	$2.4X10^{1}$	$6.0X10^{-1}$	$1.6X10^{1}$	$3.0X10^{5}$	$8.2X10^{6}$
Dy-166 (a)		$9.0X10^{-1}$	$2.4X10^{1}$	$3.0X10^{-1}$	8.1	$8.6X10^{3}$	$2.3X10^{5}$
Er-169	Erbium (68)	$4.0X10^{1}$	$1.1X10^{3}$	1.0	$2.7X10^{1}$	$3.1X10^{3}$	$8.3X10^{4}$
Er-171		$8.0X10^{-1}$	$2.2X10^{1}$	$5.0X10^{-1}$	$1.4X10^{1}$	$9.0X10^{4}$	$2.4X10^{6}$
Eu-147	Europium (63)	2.0	$5.4X10^{1}$	2.0	$5.4X10^{1}$	$1.4X10^{3}$	$3.7X10^{4}$
Eu-148		$5.0X10^{-1}$	$1.4X10^{1}$	$5.0X10^{-1}$	$1.4X10^{1}$	$6.0X10^{2}$	$1.6X10^{4}$
Eu-149		$2.0X10^{1}$	$5.4X10^{2}$	$2.0X10^{1}$	$5.4X10^{2}$	$3.5X10^{2}$	$9.4X10^{3}$
Eu-150 (short lived)		2.0	$5.4X10^{1}$	$7.0X10^{-1}$	$1.9X10^{1}$	$6.1X10^{4}$	$1.6X10^{6}$
Eu-150 (long lived)		$7.0X10^{-1}$	$1.9X10^{1}$	$7.0X10^{-1}$	$1.9X10^{1}$	6.1X104	$1.6X10^{6}$
Eu-152		1.0	$2.7X10^{1}$	1.0	$2.7X10^{1}$	6.5	$1.8X10^{2}$
Eu-152m		$8.0X10^{-1}$	$2.2X10^{1}$	$8.0X10^{-1}$	$2.2X10^{1}$	$8.2X10^{4}$	$2.2X10^{6}$
Eu-154		$9.0X10^{-1}$	$2.4X10^{1}$	$6.0X10^{-1}$	$1.6X10^{1}$	9.8	$2.6X10^{2}$
Eu-155		$2.0X10^{1}$	$5.4X10^{2}$	3.0	$8.1X10^{1}$	$1.8X10^{1}$	$4.9X10^{2}$
Eu-156		$7.0X10^{-1}$	$1.9X10^{1}$	$7.0X10^{-1}$	$1.9X10^{1}$	$2.0X10^{3}$	$5.5X10^{4}$
F-18	Fluorine (9)	1.0	$2.7X10^{1}$	$6.0X10^{-1}$	$1.6X10^{1}$	$3.5X10^{6}$	$9.5X10^{7}$
Fe-52 (a)	Iron (26)	$3.0X10^{-1}$	8.1	$3.0X10^{-1}$	8.1	$2.7X10^{5}$	$7.3X10^{6}$
Fe-55		$4.0X10^{1}$	$1.1X10^{3}$	$4.0X10^{1}$	$1.1X10^{3}$	$8.8X10^{1}$	$2.4X10^{3}$
Fe-59		$9.0X10^{-1}$	$2.4X10^{1}$	$9.0X10^{-1}$	$2.4X10^{1}$	$1.8X10^{3}$	$5.0X10^{4}$
Fe-60 (a)		$4.0X10^{1}$	$1.1X10^{3}$	$2.0X10^{-1}$	5.4	$7.4X10^{-4}$	$2.0X10^{-2}$
Ga-67	Gallium (31)	7.0	$1.9X10^{2}$	3.0	$8.1X10^{1}$	$2.2X10^{4}$	$6.0X10^{5}$

Symbol of radionuclide	Element and atomic number	A_1 (TBq)	A_1(Ci)[b]	A_2 (TBq)	A_2(Ci)[b]	Specific activity (TBq/g)	(Ci/g)
Ga-68		$5.0X10^{-1}$	$1.4X10^{1}$	$5.0X10^{-1}$	$1.4X10^{1}$	$1.5X10^{6}$	$4.1X10^{7}$
Ga-72		$4.0X10^{-1}$	$1.1X10^{1}$	$4.0X10^{-1}$	$1.1X10^{1}$	$1.1X10^{5}$	$3.1X10^{6}$
Gd-146 (a)	Gadolinium (64)	$5.0X10^{-1}$	$1.4X10^{1}$	$5.0X10^{-1}$	$1.4X10^{1}$	$6.9X10^{2}$	$1.9X10^{4}$
Gd-148		$2.0X10^{1}$	$5.4X10^{2}$	$2.0X10^{-3}$	$5.4X10^{-2}$	1.2	$3.2X10^{1}$
Gd-153		$1.0X10^{1}$	$2.7X10^{2}$	9.0	$2.4X10^{2}$	$1.3X10^{2}$	$3.5X10^{3}$
Gd-159		3.0	$8.1X10^{1}$	$6.0X10^{-1}$	$1.6X10^{1}$	$3.9X10^{4}$	$1.1X10^{6}$
Ge-68 (a)	Germanium (32)	$5.0X10^{-1}$	$1.4X10^{1}$	$5.0X10^{-1}$	$1.4X10^{1}$	$2.6X10^{2}$	$7.1X10^{3}$
Ge-71		$4.0X10^{1}$	$1.1X10^{3}$	$4.0X10^{1}$	$1.1X10^{3}$	$5.8X10^{3}$	$1.6X10^{5}$
Ge-77		$3.0X10^{-1}$	8.1	$3.0X10^{-1}$	8.1	$1.3X10^{5}$	$3.6X10^{6}$
Hf-172 (a)	Hafnium (72)	$6.0X10^{-1}$	$1.6X10^{1}$	$6.0X10^{-1}$	$1.6X10^{1}$	$4.1X10^{1}$	$1.1X10^{3}$
Hf-175		3.0	$8.1X10^{1}$	3.0	$8.1X10^{1}$	$3.9X10^{2}$	$1.1X10^{4}$
Hf-181		2.0	$5.4X10^{1}$	$5.0X10^{-1}$	$1.4X10^{1}$	$6.3X10^{2}$	$1.7X10^{4}$
Hf-182		Unlimited	Unlimited	Unlimited	Unlimited	$8.1X10^{-6}$	$2.2X10^{-4}$
Hg-194 (a)	Mercury (80)	1.0	$2.7X10^{1}$	1.0	$2.7X10^{1}$	$1.3X10^{-1}$	3.5
Hg-195m (a)		3.0	$8.1X10^{1}$	$7.0X10^{-1}$	$1.9X10^{1}$	$1.5X10^{4}$	$4.0X10^{5}$
Hg-197		$2.0X10^{1}$	$5.4X10^{2}$	$1.0X10^{1}$	$2.7X10^{2}$	$9.2X10^{3}$	$2.5X10^{5}$
Hg-197m		$1.0X10^{1}$	$2.7X10^{2}$	$4.0X10^{-1}$	$1.1X10^{1}$	$2.5X10^{4}$	$6.7X10^{5}$
Hg-203		5.0	$1.4X10^{2}$	1.0	$2.7X10^{1}$	$5.1X10^{2}$	$1.4X10^{4}$
Ho-166	Holmium (67)	$4.0X10^{-1}$	$1.1X10^{1}$	$4.0X10^{-1}$	$1.1X10^{1}$	$2.6X10^{4}$	$7.0X10^{5}$
Ho-166m		$6.0X10^{-1}$	$1.6X10^{1}$	$5.0X10^{-1}$	$1.4X10^{1}$	$6.6X10^{-2}$	1.8
I-123	Iodine (53)	6.0	$1.6X10^{2}$	3.0	$8.1X10^{1}$	$7.1X10^{4}$	$1.9X10^{6}$
I-124		1.0	$2.7X10^{1}$	1.0	$2.7X10^{1}$	$9.3X10^{3}$	$2.5X10^{5}$
I-125		$2.0X10^{1}$	$5.4X10^{2}$	3.0	$8.1X10^{1}$	$6.4X10^{2}$	$1.7X10^{4}$
I-126		2.0	$5.4X10^{1}$	1.0	$2.7X10^{1}$	$2.9X10^{3}$	$8.0X10^{4}$
I-129		Unlimited	Unlimited	Unlimited	Unlimited	$6.5X10^{-6}$	$1.8X10^{-4}$
I-131		3.0	$8.1X10^{1}$	$7.0X10^{-1}$	$1.9X10^{1}$	$4.6X10^{3}$	$1.2X10^{5}$
I-132		$4.0X10^{-1}$	$1.1X10^{1}$	$4.0X10^{-1}$	$1.1X10^{1}$	$3.8X10^{5}$	$1.0X10^{7}$
I-133		$7.0X10^{-1}$	$1.9X10^{1}$	$6.0X10^{-1}$	$1.6X10^{1}$	$4.2X10^{4}$	$1.1X10^{6}$
I-134		$3.0X10^{-1}$	8.1	$3.0X10^{-1}$	8.1	$9.9X10^{5}$	$2.7X10^{7}$
I-135 (a)		$6.0X10^{-1}$	$1.6X10^{1}$	$6.0X10^{-1}$	$1.6X10^{1}$	$1.3X10^{5}$	$3.5X10^{6}$
In-111	Indium (49)	3.0	$8.1X10^{1}$	3.0	$8.1X10^{1}$	$1.5X10^{4}$	$4.2X10^{5}$
In-113m		4.0	$1.1X10^{2}$	2.0	$5.4X10^{1}$	$6.2X10^{5}$	$1.7X10^{7}$
In-114m (a)		$1.0X10^{1}$	$2.7X10^{2}$	$5.0X10^{-1}$	$1.4X10^{1}$	$8.6X10^{2}$	$2.3X10^{4}$
In-115m		7.0	$1.9X10^{2}$	1.0	$2.7X10^{1}$	$2.2X10^{5}$	$6.1X10^{6}$
Ir-189 (a)	Iridium (77)	$1.0X10^{1}$	$2.7X10^{2}$	$1.0X10^{1}$	$2.7X10^{2}$	$1.9X10^{3}$	$5.2X10^{4}$
Ir-190		$7.0X10^{-1}$	$1.9X10^{1}$	$7.0X10^{-1}$	$1.9X10^{1}$	$2.3X10^{3}$	$6.2X10^{4}$
Ir-192 (c)		1.0	$2.7X10^{1}$	$6.0X10^{-1}$	$1.6X10^{1}$	$3.4X10^{2}$	$9.2X10^{3}$
Ir-194		$3.0X10^{-1}$	8.1	$3.0X10^{-1}$	8.1	$3.1X10^{4}$	$8.4X10^{5}$

Symbol of radionuclide	Element and atomic number	A_1 (TBq)	A_1(Ci)[b]	A_2 (TBq)	A_2(Ci)[b]	Specific activity (TBq/g)	(Ci/g)
K-40	Potassium (19)	$9.0X10^{-1}$	$2.4X10^{1}$	$9.0X10^{-1}$	$2.4X10^{1}$	$2.4X10^{-7}$	$6.4X10^{-6}$
K-42		$2.0X10^{-1}$	5.4	$2.0X10^{-1}$	5.4	$2.2X10^{5}$	$6.0X10^{6}$
K-43		$7.0X10^{-1}$	$1.9X10^{1}$	$6.0X10^{-1}$	$1.6X10^{1}$	$1.2X10^{5}$	$3.3X10^{6}$
Kr-81	Krypton (36)	$4.0X10^{1}$	$1.1X10^{3}$	$4.0X10^{1}$	$1.1X10^{3}$	$7.8X10^{-4}$	$2.1X10^{-2}$
Kr-85		$1.0X10^{1}$	$2.7X10^{2}$	$1.0X10^{1}$	$2.7X10^{2}$	$1.5X10^{1}$	$3.9X10^{2}$
Kr-85m		8.0	$2.2X10^{2}$	3.0	$8.1X10^{1}$	$3.0X10^{5}$	$8.2X10^{6}$
Kr-87		$2.0X10^{-1}$	5.4	$2.0X10^{-1}$	5.4	$1.0X10^{6}$	$2.8X10^{7}$
La-137	Lanthanum (57)	$3.0X10^{1}$	$8.1X10^{2}$	6.0	$1.6X10^{2}$	$1.6X10^{-3}$	$4.4X10^{-2}$
La-140		$4.0X10^{-1}$	$1.1X10^{1}$	$4.0X10^{-1}$	$1.1X10^{1}$	$2.1X10^{4}$	$5.6X10^{5}$
Lu-172	Lutetium (71)	$6.0X10^{-1}$	$1.6X10^{1}$	$6.0X10^{-1}$	$1.6X10^{1}$	$4.2X10^{3}$	$1.1X10^{5}$
Lu-173		8.0	$2.2X10^{2}$	8.0	$2.2X10^{2}$	$5.6X10^{1}$	$1.5X10^{3}$
Lu-174		9.0	$2.4X10^{2}$	9.0	$2.4X10^{2}$	$2.3X10^{1}$	$6.2X10^{2}$
Lu-174m		$2.0X10^{1}$	$5.4X10^{2}$	$1.0X10^{1}$	$2.7X10^{2}$	$2.0X10^{2}$	$5.3X10^{3}$
Lu-177		$3.0X10^{1}$	$8.1X10^{2}$	$7.0X10^{-1}$	$1.9X10^{1}$	$4.1X10^{3}$	$1.1X10^{5}$
Mg-28 (a)	Magnesium (12)	$3.0X10^{-1}$	8.1	$3.0X10^{-1}$	8.1	$2.0X10^{5}$	$5.4X10^{6}$
Mn-52	Manganese (25)	$3.0X10^{-1}$	8.1	$3.0X10^{-1}$	8.1	$1.6X10^{4}$	$4.4X10^{5}$
Mn-53		Unlimited	Unlimited	Unlimited	Unlimited	$6.8X10^{-5}$	$1.8X10^{-3}$
Mn-54		1.0	$2.7X10^{1}$	1.0	$2.7X10^{1}$	$2.9X10^{2}$	$7.7X10^{3}$
Mn-56		$3.0X10^{-1}$	8.1	$3.0X10^{-1}$	8.1	$8.0X10^{5}$	$2.2X10^{7}$
Mo-93	Molybdenum (42)	$4.0X10^{1}$	$1.1X10^{3}$	$2.0X10^{1}$	$5.4X10^{2}$	$4.1X10^{-2}$	1.1
Mo-99 (a) (i)		1.0	$2.7X10^{1}$	$6.0X10^{-1}$	$1.6X10^{1}$	$1.8X10^{4}$	$4.8X10^{5}$
N-13	Nitrogen (7)	$9.0X10^{-1}$	$2.4X10^{1}$	$6.0X10^{-1}$	$1.6X10^{1}$	$5.4X10^{7}$	$1.5X10^{9}$
Na-22	Sodium (11)	$5.0X10^{-1}$	$1.4X10^{1}$	$5.0X10^{-1}$	$1.4X10^{1}$	$2.3X10^{2}$	$6.3X10^{3}$
Na-24		$2.0X10^{-1}$	5.4	$2.0X10^{-1}$	5.4	$3.2X10^{5}$	$8.7X10^{6}$
Nb-93m	Niobium (41)	$4.0X10^{1}$	$1.1X10^{3}$	$3.0X10^{1}$	$8.1X10^{2}$	8.8	$2.4X10^{2}$
Nb-94		$7.0X10^{-1}$	$1.9X10^{1}$	$7.0X10^{-1}$	$1.9X10^{1}$	$6.9X10^{-3}$	$1.9X10^{-1}$
Nb-95		1.0	$2.7X10^{1}$	1.0	$2.7X10^{1}$	$1.5X10^{3}$	$3.9X10^{4}$
Nb-97		$9.0X10^{-1}$	$2.4X10^{1}$	$6.0X10^{-1}$	$1.6X10^{1}$	$9.9X10^{5}$	$2.7X10^{7}$
Nd-147	Neodymium (60)	6.0	$1.6X10^{2}$	$6.0X10^{-1}$	$1.6X10^{1}$	$3.0X10^{3}$	$8.1X10^{4}$
Nd-149		$6.0X10^{-1}$	$1.6X10^{1}$	$5.0X10^{-1}$	$1.4X10^{1}$	$4.5X10^{5}$	$1.2X10^{7}$
Ni-59	Nickel (28)	Unlimited	Unlimited	Unlimited	Unlimited	$3.0X10^{-3}$	$8.0X10^{-2}$
Ni-63		$4.0X10^{1}$	$1.1X10^{3}$	$3.0X10^{1}$	$8.1X10^{2}$	2.1	$5.7X10^{1}$
Ni-65		$4.0X10^{-1}$	$1.1X10^{1}$	$4.0X10^{-1}$	$1.1X10^{1}$	$7.1X10^{5}$	$1.9X10^{7}$
Np-235	Neptunium (93)	$4.0X10^{1}$	$1.1X10^{3}$	$4.0X10^{1}$	$1.1X10^{3}$	$5.2X10^{1}$	$1.4X10^{3}$
Np-236 (short-lived)		$2.0X10^{1}$	$5.4X10^{2}$	2.0	$5.4X10^{1}$	$4.7X10^{-4}$	$1.3X10^{-2}$
Np-236 (long-lived)		$9.0X10^{0}$	$2.4X10^{2}$	$2.0X10^{-2}$	$5.4X10^{-1}$	$4.7X10^{-4}$	$1.3X10^{-2}$
Np-237		$2.0X10^{1}$	$5.4X10^{2}$	$2.0X10^{-3}$	$5.4X10^{-2}$	$2.6X10^{-5}$	$7.1X10^{-4}$

Symbol of radionuclide	Element and atomic number	A_1 (TBq)	A_1(Ci)[b]	A_2 (TBq)	A_2(Ci)[b]	Specific activity (TBq/g)	(Ci/g)
Np-239		7.0	$1.9X10^2$	$4.0X10^{-1}$	$1.1X10^1$	$8.6X10^3$	$2.3X10^5$
Os-185	Osmium (76)	1.0	$2.7X10^1$	1.0	$2.7X10^1$	$2.8X10^2$	$7.5X10^3$
Os-191		$1.0X10^1$	$2.7X10^2$	2.0	$5.4X10^1$	$1.6X10^3$	$4.4X10^4$
Os-191m		$4.0X10^1$	$1.1X10^3$	$3.0X10^1$	$8.1X10^2$	$4.6X10^4$	$1.3X10^6$
Os-193		2.0	$5.4X10^1$	$6.0X10^{-1}$	$1.6X10^1$	$2.0X10^4$	$5.3X10^5$
Os-194 (a)		$3.0X10^{-1}$	8.1	$3.0X10^{-1}$	8.1	$1.1X10^1$	$3.1X10^2$
P-32	Phosphorus (15)	$5.0X10^{-1}$	$1.4X10^1$	$5.0X10^{-1}$	$1.4X10^1$	$1.1X10^4$	$2.9X10^5$
P-33		$4.0X10^1$	$1.1X10^3$	1.0	$2.7X10^1$	$5.8X10^3$	$1.6X10^5$
Pa-230 (a)	Protactinium (91)	2.0	$5.4X10^1$	$7.0X10^{-2}$	1.9	$1.2X10^3$	$3.3X10^4$
Pa-231		4.0	$1.1X10^2$	$4.0X10^{-4}$	$1.1X10^{-2}$	$1.7X10^{-3}$	$4.7X10^{-2}$
Pa-233		5.0	$1.4X10^2$	$7.0X10^{-1}$	$1.9X10^1$	$7.7X10^2$	$2.1X10^4$
Pb-201	Lead (82)	1.0	$2.7X10^1$	1.0	$2.7X10^1$	$6.2X10^4$	$1.7X10^6$
Pb-202		$4.0X10^1$	$1.1X10^3$	$2.0X10^1$	$5.4X10^2$	$1.2X10^{-4}$	$3.4X10^{-3}$
Pb-203		4.0	$1.1X10^2$	3.0	$8.1X10^1$	$1.1X10^4$	$3.0X10^5$
Pb-205		Unlimited	Unlimited	Unlimited	Unlimited	$4.5X10^{-6}$	$1.2X10^{-4}$
Pb-210 (a)		1.0	$2.7X10^1$	$5.0X10^{-2}$	1.4	2.8	$7.6X10^1$
Pb-212 (a)		$7.0X10^{-1}$	$1.9X10^1$	$2.0X10^{-1}$	5.4	$5.1X10^4$	$1.4X10^6$
Pd-103 (a)	Palladium (46)	$4.0X10^1$	$1.1X10^3$	$4.0X10^1$	$1.1X10^3$	$2.8X10^3$	$7.5X10^4$
Pd-107		Unlimited	Unlimited	Unlimited	Unlimited	$1.9X10^{-5}$	$5.1X10^{-4}$
Pd-109		2.0	$5.4X10^1$	$5.0X10^{-1}$	$1.4X10^1$	$7.9X10^4$	$2.1X10^6$
Pm-143	Promethium (61)	3.0	$8.1X10^1$	3.0	$8.1X10^1$	$1.3X10^2$	$3.4X10^3$
Pm-144		$7.0X10^{-1}$	$1.9X10^1$	$7.0X10^{-1}$	$1.9X10^1$	$9.2X10^1$	$2.5X10^3$
Pm-145		$3.0X10^1$	$8.1X10^2$	$1.0X10^1$	$2.7X10^2$	5.2	$1.4X10^2$
Pm-147		$4.0X10^1$	$1.1X10^3$	2.0	$5.4X10^1$	$3.4X10^1$	$9.3X10^2$
Pm-148m (a)		$8.0X10^{-1}$	$2.2X10^1$	$7.0X10^{-1}$	$1.9X10^1$	$7.9X10^2$	$2.1X10^4$
Pm-149		2.0	$5.4X10^1$	$6.0X10^{-1}$	$1.6X10^1$	$1.5X10^4$	$4.0X10^5$
Pm-151		2.0	$5.4X10^1$	$6.0X10^{-1}$	$1.6X10^1$	$2.7X10^4$	$7.3X10^5$
Po-210	Polonium (84)	$4.0X10^1$	$1.1X10^3$	$2.0X10^{-2}$	$5.4X10^{-1}$	$1.7X10^2$	$4.5X10^3$
Pr-142	Praseodymium (59)	$4.0X10^{-1}$	$1.1X10^1$	$4.0X10^{-1}$	$1.1X10^1$	$4.3X10^4$	$1.2X10^6$
Pr-143		3.0	$8.1X10^1$	$6.0X10^{-1}$	$1.6X10^1$	$2.5X10^3$	$6.7X10^4$
Pt-188 (a)	Platinum (78)	1.0	$2.7X10^1$	$8.0X10^{-1}$	$2.2X10^1$	$2.5X10^3$	$6.8X10^4$
Pt-191		4.0	$1.1X10^2$	3.0	$8.1X10^1$	$8.7X10^3$	$2.4X10^5$
Pt-193		$4.0X10^1$	$1.1X10^3$	$4.0X10^1$	$1.1X10^3$	1.4	$3.7X10^1$
Pt-193m		$4.0X10^1$	$1.1X10^3$	$5.0X10^{-1}$	$1.4X10^1$	$5.8X10^3$	$1.6X10^5$
Pt-195m		$1.0X10^1$	$2.7X10^2$	$5.0X10^{-1}$	$1.4X10^1$	$6.2X10^3$	$1.7X10^5$
Pt-197		$2.0X10^1$	$5.4X10^2$	$6.0X10^{-1}$	$1.6X10^1$	$3.2X10^4$	$8.7X10^5$
Pt-197m		$1.0X10^1$	$2.7X10^2$	$6.0X10^{-1}$	$1.6X10^1$	$3.7X10^5$	$1.0X10^7$
Pu-236	Plutonium (94)	$3.0X10^1$	$8.1X10^2$	$3.0X10^{-3}$	$8.1X10^{-2}$	$2.0X10^1$	$5.3X10^2$

Symbol of radionuclide	Element and atomic number	A_1 (TBq)	A_1(Ci)[b]	A_2 (TBq)	A_2(Ci)[b]	Specific activity (TBq/g)	(Ci/g)
Pu-237		$2.0X10^{1}$	$5.4X10^{2}$	$2.0X10^{1}$	$5.4X10^{2}$	$4.5X10^{2}$	$1.2X10^{4}$
Pu-238		$1.0X10^{1}$	$2.7X10^{2}$	$1.0X10^{-3}$	$2.7X10^{-2}$	$6.3X10^{-1}$	$1.7X10^{1}$
Pu-239		$1.0X10^{1}$	$2.7X10^{2}$	$1.0X10^{-3}$	$2.7X10^{-2}$	$2.3X10^{-3}$	$6.2X10^{-2}$
Pu-240		$1.0X10^{1}$	$2.7X10^{2}$	$1.0X10^{-3}$	$2.7X10^{-2}$	$8.4X10^{-3}$	$2.3X10^{-1}$
Pu-241 (a)		$4.0X10^{1}$	$1.1X10^{3}$	$6.0X10^{-2}$	1.6	3.8	$1.0X10^{2}$
Pu-242		$1.0X10^{1}$	$2.7X10^{2}$	$1.0X10^{-3}$	$2.7X10^{-2}$	$1.5X10^{-4}$	$3.9X10^{-3}$
Pu-244 (a)		$4.0X10^{-1}$	$1.1X10^{1}$	$1.0X10^{-3}$	$2.7X10^{-2}$	$6.7X10^{-7}$	$1.8X10^{-5}$
Ra-223 (a)	Radium (88)	$4.0X10^{-1}$	$1.1X10^{1}$	$7.0X10^{-3}$	$1.9X10^{-1}$	$1.9X10^{3}$	$5.1X10^{4}$
Ra-224 (a)		$4.0X10^{-1}$	$1.1X10^{1}$	$2.0X10^{-2}$	$5.4X10^{-1}$	$5.9X10^{3}$	$1.6X10^{5}$
Ra-225 (a)		$2.0X10^{-1}$	5.4	$4.0X10^{-3}$	$1.1X10^{-1}$	$1.5X10^{3}$	$3.9X10^{4}$
Ra-226 (a)		$2.0X10^{-1}$	5.4	$3.0X10^{-3}$	$8.1X10^{-2}$	$3.7X10^{-2}$	1.0
Ra-228 (a)		$6.0X10^{-1}$	$1.6X10^{1}$	$2.0X10^{-2}$	$5.4X10^{-1}$	$1.0X10^{1}$	$2.7X10^{2}$
Rb-81	Rubidium (37)	2.0	$5.4X10^{1}$	$8.0X10^{-1}$	$2.2X10^{1}$	$3.1X10^{5}$	$8.4X10^{6}$
Rb-83 (a)		2.0	$5.4X10^{1}$	2.0	$5.4X10^{1}$	$6.8X10^{2}$	$1.8X10^{4}$
Rb-84		1.0	$2.7X10^{1}$	1.0	$2.7X10^{1}$	$1.8X10^{3}$	$4.7X10^{4}$
Rb-86		$5.0X10^{-1}$	$1.4X10^{1}$	$5.0X10^{-1}$	$1.4X10^{1}$	$3.0X10^{3}$	$8.1X10^{4}$
Rb-87		Unlimited	Unlimited	Unlimited	Unlimited	$3.2X10^{-9}$	$8.6X10^{-8}$
Rb(nat)		Unlimited	Unlimited	Unlimited	Unlimited	$6.7X10^{6}$	$1.8X10^{8}$
Re-184	Rhenium (75)	1.0	$2.7X10^{1}$	1.0	$2.7X10^{1}$	$6.9X10^{2}$	$1.9X10^{4}$
Re-184m		3.0	$8.1X10^{1}$	1.0	$2.7X10^{1}$	$1.6X10^{2}$	$4.3X10^{3}$
Re-186		2.0	$5.4X10^{1}$	$6.0X10^{-1}$	$1.6X10^{1}$	$6.9X10^{3}$	$1.9X10^{5}$
Re-187		Unlimited	Unlimited	Unlimited	Unlimited	$1.4X10^{-9}$	$3.8X10^{-8}$
Re-188		$4.0X10^{-1}$	$1.1X10^{1}$	$4.0X10^{-1}$	$1.1X10^{1}$	$3.6X10^{4}$	$9.8X10^{5}$
Re-189 (a)		3.0	$8.1X10^{1}$	$6.0X10^{-1}$	$1.6X10^{1}$	$2.5X10^{4}$	$6.8X10^{5}$
Re(nat)		Unlimited	Unlimited	Unlimited	Unlimited	0.0	$2.4X10^{-8}$
Rh-99	Rhodium (45)	2.0	$5.4X10^{1}$	2.0	$5.4X10^{1}$	$3.0X10^{3}$	$8.2X10^{4}$
Rh-101		4.0	$1.1X10^{2}$	3.0	$8.1X10^{1}$	$4.1X10^{1}$	$1.1X10^{3}$
Rh-102		$5.0X10^{-1}$	$1.4X10^{1}$	$5.0X10^{-1}$	$1.4X10^{1}$	$4.5X10^{1}$	$1.2X10^{3}$
Rh-102m		2.0	$5.4X10^{1}$	2.0	$5.4X10^{1}$	$2.3X10^{2}$	$6.2X10^{3}$
Rh-103m		$4.0X10^{1}$	$1.1X10^{3}$	$4.0X10^{1}$	$1.1X10^{3}$	$1.2X10^{6}$	$3.3X10^{7}$
Rh-105		$1.0X10^{1}$	$2.7X10^{2}$	$8.0X10^{-1}$	$2.2X10^{1}$	$3.1X10^{4}$	$8.4X10^{5}$
Rn-222 (a)	Radon (86)	$3.0X10^{-1}$	8.1	$4.0X10^{-3}$	$1.1X10^{-1}$	$5.7X10^{3}$	$1.5X10^{5}$
Ru-97	Ruthenium (44)	5.0	$1.4X10^{2}$	5.0	$1.4X10^{2}$	$1.7X10^{4}$	$4.6X10^{5}$
Ru-103 (a)		2.0	$5.4X10^{1}$	2.0	$5.4X10^{1}$	$1.2X10^{3}$	$3.2X10^{4}$
Ru-105		1.0	$2.7X10^{1}$	$6.0X10^{-1}$	$1.6X10^{1}$	$2.5X10^{5}$	$6.7X10^{6}$
Ru-106 (a)		$2.0X10^{-1}$	5.4	$2.0X10^{-1}$	5.4	$1.2X10^{2}$	$3.3X10^{3}$
S-35	Sulphur (16)	$4.0X10^{1}$	$1.1X10^{3}$	3.0	$8.1X10^{1}$	$1.6X10^{3}$	$4.3X10^{4}$
Sb-122	Antimony (51)	$4.0X10^{-1}$	$1.1X10^{1}$	$4.0X10^{-1}$	$1.1X10^{1}$	$1.5X10^{4}$	$4.0X10^{5}$

Symbol of radionuclide	Element and atomic number	A_1 (TBq)	A_1(Ci)[b]	A_2 (TBq)	A_2(Ci)[b]	Specific activity (TBq/g)	(Ci/g)
Sb-124		$6.0X10^{-1}$	$1.6X10^{1}$	$6.0X10^{-1}$	$1.6X10^{1}$	$6.5X10^{2}$	$1.7X10^{4}$
Sb-125		2.0	$5.4X10^{1}$	1.0	$2.7X10^{1}$	$3.9X10^{1}$	$1.0X10^{3}$
Sb-126		$4.0X10^{-1}$	$1.1X10^{1}$	$4.0X10^{-1}$	$1.1X10^{1}$	$3.1X10^{3}$	$8.4X10^{4}$
Sc-44	Scandium (21)	$5.0X10^{-1}$	$1.4X10^{1}$	$5.0X10^{-1}$	$1.4X10^{1}$	$6.7X10^{5}$	$1.8X10^{7}$
Sc-46		$5.0X10^{-1}$	$1.4X10^{1}$	$5.0X10^{-1}$	$1.4X10^{1}$	$1.3X10^{3}$	$3.4X10^{4}$
Sc-47		$1.0X10^{1}$	$2.7X10^{2}$	$7.0X10^{-1}$	$1.9X10^{1}$	$3.1X10^{4}$	$8.3X10^{5}$
Sc-48		$3.0X10^{-1}$	8.1	$3.0X10^{-1}$	8.1	$5.5X10^{4}$	$1.5X10^{6}$
Se-75	Selenium (34)	3.0	$8.1X10^{1}$	3.0	$8.1X10^{1}$	$5.4X10^{2}$	$1.5X10^{4}$
Se-79		$4.0X10^{1}$	$1.1X10^{3}$	2.0	$5.4X10^{1}$	$2.6X10^{-3}$	$7.0X10^{-2}$
Si-31	Silicon (14)	$6.0X10^{-1}$	$1.6X10^{1}$	$6.0X10^{-1}$	$1.6X10^{1}$	$1.4X10^{6}$	$3.9X10^{7}$
Si-32		$4.0X10^{1}$	$1.1X10^{3}$	$5.0X10^{-1}$	$1.4X10^{1}$	3.9	$1.1X10^{2}$
Sm-145	Samarium (62)	$1.0X10^{1}$	$2.7X10^{2}$	$1.0X10^{1}$	$2.7X10^{2}$	$9.8X10^{1}$	$2.6X10^{3}$
Sm-147		Unlimited	Unlimited	Unlimited	Unlimited	$8.5X10^{-1}$	$2.3X10^{-8}$
Sm-151		$4.0X10^{1}$	$1.1X10^{3}$	$1.0X10^{1}$	$2.7X10^{2}$	$9.7X10^{-1}$	$2.6X10^{1}$
Sm-153		9.0	$2.4X10^{2}$	$6.0X10^{-1}$	$1.6X10^{1}$	$1.6X10^{4}$	$4.4X10^{5}$
Sn-113 (a)	Tin (50)	4.0	$1.1X10^{2}$	2.0	$5.4X10^{1}$	$3.7X10^{2}$	$1.0X10^{4}$
Sn-117m		7.0	$1.9X10^{2}$	$4.0X10^{-1}$	$1.1X10^{1}$	$3.0X10^{3}$	$8.2X10^{4}$
Sn-119m		$4.0X10^{1}$	$1.1X10^{3}$	$3.0X10^{1}$	$8.1X10^{2}$	$1.4X10^{2}$	$3.7X10^{3}$
Sn-121m (a)		$4.0X10^{1}$	$1.1X10^{3}$	$9.0X10^{-1}$	$2.4X10^{1}$	2.0	$5.4X10^{1}$
Sn-123		$8.0X10^{-1}$	$2.2X10^{1}$	$6.0X10^{-1}$	$1.6X10^{1}$	$3.0X10^{2}$	$8.2X10^{3}$
Sn-125		$4.0X10^{-1}$	$1.1X10^{1}$	$4.0X10^{-1}$	$1.1X10^{1}$	$4.0X10^{3}$	$1.1X10^{5}$
Sn-126 (a)		$6.0X10^{-1}$	$1.6X10^{1}$	$4.0X10^{-1}$	$1.1X10^{1}$	$1.0X10^{-3}$	$2.8X10^{-2}$
Sr-82 (a)	Strontium (38)	$2.0X10^{-1}$	5.4	$2.0X10^{-1}$	5.4	$2.3X10^{3}$	$6.2X10^{4}$
Sr-85		2.0	$5.4X10^{1}$	2.0	$5.4X10^{1}$	$8.8X10^{2}$	$2.4X10^{4}$
Sr-85m		5.0	$1.4X10^{2}$	5.0	$1.4X10^{2}$	$1.2X10^{6}$	$3.3X10^{7}$
Sr-87m		3.0	$8.1X10^{1}$	3.0	$8.1X10^{1}$	$4.8X10^{5}$	$1.3X10^{7}$
Sr-89		$6.0X10^{-1}$	$1.6X10^{1}$	$6.0X10^{-1}$	$1.6X10^{1}$	$1.1X10^{3}$	$2.9X10^{4}$
Sr-90 (a)		$3.0X10^{-1}$	8.1	$3.0X10^{-1}$	8.1	5.1	$1.4X10^{2}$
Sr-91 (a)		$3.0X10^{-1}$	8.1	$3.0X10^{-1}$	8.1	$1.3X10^{5}$	$3.6X10^{6}$
Sr-92 (a)		1.0	$2.7X10^{1}$	$3.0X10^{-1}$	8.1	$4.7X10^{5}$	$1.3X10^{7}$
T (H-3)	Tritium (1)	$4.0X10^{1}$	$1.1X10^{3}$	$4.0X10^{1}$	$1.1X10^{3}$	$3.6X10^{2}$	$9.7X10^{3}$
Ta-178 (long-lived)	Tantalum (73)	1.0	$2.7X10^{1}$	$8.0X10^{-1}$	$2.2X10^{1}$	$4.2X10^{6}$	$1.1X10^{8}$
Ta-179		$3.0X10^{1}$	$8.1X10^{2}$	$3.0X10^{1}$	$8.1X10^{2}$	$4.1X10^{1}$	$1.1X10^{3}$
Ta-182		$9.0X10^{-1}$	$2.4X10^{1}$	$5.0X10^{-1}$	$1.4X10^{1}$	$2.3X10^{2}$	$6.2X10^{3}$
Tb-157	Terbium (65)	$4.0X10^{1}$	$1.1X10^{3}$	$4.0X10^{1}$	$1.1X10^{3}$	$5.6X10^{-1}$	$1.5X10^{1}$
Tb-158		1.0	$2.7X10^{1}$	1.0	$2.7X10^{1}$	$5.6X10^{-1}$	$1.5X10^{1}$
Tb-160		1.0	$2.7X10^{1}$	$6.0X10^{-1}$	$1.6X10^{1}$	$4.2X10^{2}$	$1.1X10^{4}$

Symbol of radionuclide	Element and atomic number	A_1 (TBq)	A_1(Ci)[b]	A_2 (TBq)	A_2(Ci)[b]	Specific activity (TBq/g)	(Ci/g)
Tc-95m (a)	Technetium (43)	2.0	$5.4X10^{1}$	2.0	$5.4X10^{1}$	$8.3X10^{2}$	$2.2X10^{4}$
Tc-96		$4.0X10^{-1}$	$1.1X10^{1}$	$4.0X10^{-1}$	$1.1X10^{1}$	$1.2X10^{4}$	$3.2X10^{5}$
Tc-96m (a)		$4.0X10^{-1}$	$1.1X10^{1}$	$4.0X10^{-1}$	$1.1X10^{1}$	$1.4X10^{6}$	$3.8X10^{7}$
Tc-97		Unlimited	Unlimited	Unlimited	Unlimited	$5.2X10^{-5}$	$1.4X10^{-3}$
Tc-97m		$4.0X10^{1}$	$1.1X10^{3}$	1.0	$2.7X10^{1}$	$5.6X10^{2}$	$1.5X10^{4}$
Tc-98		$8.0X10^{-1}$	$2.2X10^{1}$	$7.0X10^{-1}$	$1.9X10^{1}$	$3.2X10^{-5}$	$8.7X10^{-4}$
Tc-99		$4.0X10^{1}$	$1.1X10^{3}$	$9.0X10^{-1}$	$2.4X10^{1}$	$6.3X10^{-4}$	$1.7X10^{-2}$
Tc-99m		$1.0X10^{1}$	$2.7X10^{2}$	4.0	$1.1X10^{2}$	$1.9X10^{5}$	$5.3X10^{6}$
Te-121	Tellurium (52)	2.0	$5.4X10^{1}$	2.0	$5.4X10^{1}$	$2.4X10^{3}$	$6.4X10^{4}$
Te-121m		5.0	$1.4X10^{2}$	3.0	$8.1X10^{1}$	$2.6X10^{2}$	$7.0X10^{3}$
Te-123m		8.0	$2.2X10^{2}$	1.0	$2.7X10^{1}$	$3.3X10^{2}$	$8.9X10^{3}$
Te-125m		$2.0X10^{1}$	$5.4X10^{2}$	$9.0X10^{-1}$	$2.4X10^{1}$	$6.7X10^{2}$	$1.8X10^{4}$
Te-127		$2.0X10^{1}$	$5.4X10^{2}$	$7.0X10^{-1}$	$1.9X10^{1}$	$9.8X10^{4}$	$2.6X10^{6}$
Te-127m (a)		$2.0X10^{1}$	$5.4X10^{2}$	$5.0X10^{-1}$	$1.4X10^{1}$	$3.5X10^{2}$	$9.4X10^{3}$
Te-129		$7.0X10^{-1}$	$1.9X10^{1}$	$6.0X10^{-1}$	$1.6X10^{1}$	$7.7X10^{5}$	$2.1X10^{7}$
Te-129m (a)		$8.0X10^{-1}$	$2.2X10^{1}$	$4.0X10^{-1}$	$1.1X10^{1}$	$1.1X10^{3}$	$3.0X10^{4}$
Te-131m (a)		$7.0X10^{-1}$	$1.9X10^{1}$	$5.0X10^{-1}$	$1.4X10^{1}$	$3.0X10^{4}$	$8.0X10^{5}$
Te-132 (a)		$5.0X10^{-1}$	$1.4X10^{1}$	$4.0X10^{-1}$	$1.1X10^{1}$	$3.1X10^{4}$	$3.0X10^{5}$
Th-227	Thorium (90)	$1.0X10^{1}$	$2.7X10^{2}$	$5.0X10^{-3}$	$1.4X10^{-1}$	$1.1X10^{3}$	$3.1X10^{4}$
Th-228 (a)		$5.0X10^{-1}$	$1.4X10^{1}$	$1.0X10^{-3}$	$2.7X10^{-2}$	$3.0X10^{1}$	$8.2X10^{2}$
Th-229		5.0	$1.4X10^{2}$	$5.0X10^{-4}$	$1.4X10^{-2}$	$7.9X10^{-3}$	$2.1X10^{-1}$
Th-230		$1.0X10^{1}$	$2.7X10^{2}$	$1.0X10^{-3}$	$2.7X10^{-2}$	$7.6X10^{-4}$	$2.1X10^{-2}$
Th-231		$4.0X10^{1}$	$1.1X10^{3}$	$2.0X10^{-2}$	$5.4X10^{-1}$	$2.0X10^{4}$	$5.3X10^{5}$
Th-232		Unlimited	Unlimited	Unlimited	Unlimited	$4.0X10^{-9}$	$1.1X10^{-7}$
Th-234 (a)		$3.0X10^{-1}$	8.1	$3.0X10^{-1}$	8.1	$8.6X10^{2}$	$2.3X10^{4}$
Th (natural)		Unlimited	Unlimited	Unlimited	Unlimited	$8.1X10^{-9}$	$2.2X10^{-7}$
Ti-44 (a)	Titanium (22)	$5.0X10^{-1}$	$1.4X10^{1}$	$4.0X10^{-1}$	$1.1X10^{1}$	6.4	$1.7X10^{2}$
Tl-200	Thallium (81)	$9.0X10^{-1}$	$2.4X10^{1}$	$9.0X10^{-1}$	$2.4X10^{1}$	$2.2X10^{4}$	$6.0X10^{5}$
Tl-201		$1.0X10^{1}$	$2.7X10^{2}$	4.0	$1.1X10^{2}$	$7.9X10^{3}$	$2.1X10^{5}$
Tl-202		2.0	$5.4X10^{1}$	2.0	$5.4X10^{1}$	$2.0X10^{3}$	$5.3X10^{4}$
Tl-204		$1.0X10^{1}$	$2.7X10^{2}$	$7.0X10^{-1}$	$1.9X10^{1}$	$1.7X10^{1}$	$4.6X10^{2}$
Tm-167	Thulium (69)	7.0	$1.9X10^{2}$	$8.0X10^{-1}$	$2.2X10^{1}$	$3.1X10^{3}$	$8.5X10^{4}$
Tm-170		3.0	$8.1X10^{1}$	$6.0X10^{-1}$	$1.6X10^{1}$	$2.2X10^{2}$	$6.0X10^{3}$
Tm-171		$4.0X10^{1}$	$1.1X10^{3}$	$4.0X10^{1}$	$1.1X10^{3}$	$4.0X10^{1}$	$1.1X10^{3}$
U-230 (fast lung absorption) (a)(d)	Uranium (92)	$4.0X10^{1}$	$1.1X10^{3}$	$1.0X10^{-1}$	2.7	$1.0X10^{3}$	$2.7X10^{4}$

Symbol of radionuclide	Element and atomic number	A_1 (TBq)	A_1(Ci)[b]	A_2 (TBq)	A_2(Ci)[b]	Specific activity (TBq/g)	(Ci/g)
U-230 (medium lung absorption) (a)(e)		$4.0X10^{1}$	$1.1X10^{3}$	$4.0X10^{-3}$	$1.1X10^{-1}$	$1.0X10^{3}$	$2.7X10^{4}$
U-230 (slow lung absorption) (a)(f)		$3.0X10^{1}$	$8.1X10^{2}$	$3.0X10^{-3}$	$8.1X10^{-2}$	$1.0X10^{3}$	$2.7X10^{4}$
U-232 (fast lung absorption) (d)		$4.0X10^{1}$	$1.1X10^{3}$	$1.0X10^{-2}$	$2.7X10^{-1}$	$8.3X10^{-1}$	$2.2X10^{1}$
U-232 (medium lung absorption) (e)		$4.0X10^{1}$	$1.1X10^{3}$	$7.0X10^{-3}$	$1.9X10^{-1}$	$8.3X10^{-1}$	$2.2X10^{1}$
U-232 (slow lung absorption) (f)		$1.0X10^{1}$	$2.7X10^{2}$	$1.0X10^{-3}$	$2.7X10^{-2}$	$8.3X10^{-1}$	$2.2X10^{1}$
U-233 (fast lung absorption) (d)		$4.0X10^{1}$	$1.1X10^{3}$	$9.0X10^{-2}$	2.4	$3.6X10^{-4}$	$9.7X10^{-3}$
U-233 (medium lung absorption) (e)		$4.0X10^{1}$	$1.1X10^{3}$	$2.0X10^{-2}$	$5.4X10^{-1}$	$3.6X10^{-4}$	$9.7X10^{-3}$
U-233 (slow lung absorption) (f)		$4.0X10^{1}$	$1.1X10^{3}$	$6.0X10^{-3}$	$1.6X10^{-1}$	$3.6X10^{-4}$	$9.7X10^{-3}$
U-234 (fast lung absorption) (d)		$4.0X10^{1}$	$1.1X10^{3}$	$9.0X10^{-2}$	2.4	$2.3X10^{-4}$	$6.2X10^{-3}$
U-234 (medium lung absorption) (e)		$4.0X10^{1}$	$1.1X10^{3}$	$2.0X10^{-2}$	$5.4X10^{-1}$	$2.3X10^{-4}$	$6.2X10^{-3}$
U-234 (slow lung absorption) (f)		$4.0X10^{1}$	$1.1X10^{3}$	$6.0X10^{-3}$	$1.6X10^{-1}$	$2.3X10^{-4}$	$6.2X10^{-3}$
U-235 (all lung absorption types) (a),(d),(e),(f)		Unlimited	Unlimited	Unlimited	Unlimited	$8.0X10^{-8}$	$2.2X10^{-6}$
U-236 (fast lung absorption) (d)		Unlimited	Unlimited	Unlimited	Unlimited	$2.4X10^{-6}$	$6.5X10^{-5}$
U-236 (medium lung absorption) (e)		$4.0X10^{1}$	$1.1X10^{3}$	$2.0X10^{-2}$	$5.4X10^{-1}$	$2.4X10^{-6}$	$6.5X10^{-5}$
U-236 (slow lung absorption) (f)		$4.0X10^{1}$	$1.1X10^{3}$	$6.0X10^{-3}$	$1.6X10^{-1}$	$2.4X10^{-6}$	$6.5X10^{-5}$
U-238 (all lung absorption types) (d),(e),(f)		Unlimited	Unlimited	Unlimited	Unlimited	$1.2X10^{-8}$	$3.4X10^{-7}$

Symbol of radionuclide	Element and atomic number	A_1 (TBq)	A_1(Ci)[b]	A_2 (TBq)	A_2(Ci)[b]	Specific activity (TBq/g)	(Ci/g)
U (natural)		Unlimited	Unlimited	Unlimited	Unlimited	$2.6X10^{-8}$	$7.1X10^{-7}$
U (enriched to 20% or less) (g)		Unlimited	Unlimited	Unlimited	Unlimited	See Table 6	See Table 6
U (dep)		Unlimited	Unlimited	Unlimited	Unlimited	See Table	See Table
V-48	Vanadium (23)	$4.0X10^{-1}$	$1.1X10^{1}$	$4.0X10^{-1}$	$1.1X10^{1}$	$6.3X10^{3}$	$1.7X10^{5}$
V-49		$4.0X10^{1}$	$1.1X10^{3}$	$4.0X10^{1}$	$1.1X10^{3}$	$3.0X10^{2}$	$8.1X10^{3}$
W-178 (a)	Tungsten (74)	9.0	$2.4X10^{2}$	5.0	$1.4X10^{2}$	$1.3X10^{3}$	$3.4X10^{4}$
W-181		$3.0X10^{1}$	$8.1X10^{2}$	$3.0X10^{1}$	$8.1X10^{2}$	$2.2X10^{2}$	$6.0X10^{3}$
W-185		$4.0X10^{1}$	$1.1X10^{3}$	$8.0X10^{-1}$	$2.2X10^{1}$	$3.5X10^{2}$	$9.4X10^{3}$
W-187		2.0	$5.4X10^{1}$	$6.0X10^{-1}$	$1.6X10^{1}$	$2.6X10^{4}$	$7.0X10^{5}$
W-188 (a)		$4.0X10^{-1}$	$1.1X10^{1}$	$3.0X10^{-1}$	8.1	$3.7X10^{2}$	$1.0X10^{4}$
Xe-122 (a)	Xenon (54)	$4.0X10^{-1}$	$1.1X10^{1}$	$4.0X10^{-1}$	$1.1X10^{1}$	$4.8X10^{4}$	$1.3X10^{6}$
Xe-123		2.0	$5.4X10^{1}$	$7.0X10^{-1}$	$1.9X10^{1}$	$4.4X10^{5}$	$1.2X10^{7}$
Xe-127		4.0	$1.1X10^{2}$	2.0	$5.4X10^{1}$	$1.0X10^{3}$	$2.8X10^{4}$
Xe-131m		$4.0X10^{1}$	$1.1X10^{3}$	$4.0X10^{1}$	$1.1X10^{3}$	$3.1X10^{3}$	$8.4X10^{4}$
Xe-133		$2.0X10^{1}$	$5.4X10^{2}$	$1.0X10^{1}$	$2.7X10^{2}$	$6.9X10^{3}$	$1.9X10^{5}$
Xe-135		3.0	$8.1X10^{1}$	2.0	$5.4X10^{1}$	$9.5X10^{4}$	$2.6X10^{6}$
Y-87 (a)	Yttrium (39)	1.0	$2.7X10^{1}$	1.0	$2.7X10^{1}$	$1.7X10^{4}$	$4.5X10^{5}$
Y-88		$4.0X10^{-1}$	$1.1X10^{1}$	$4.0X10^{-1}$	$1.1X10^{1}$	$5.2X10^{2}$	$1.4X10^{4}$
Y-90		$3.0X10^{-1}$	8.1	$3.0X10^{-1}$	8.1	$2.0X10^{4}$	$5.4X10^{5}$
Y-91		$6.0X10^{-1}$	$1.6X10^{1}$	$6.0X10^{-1}$	$1.6X10^{1}$	$9.1X10^{2}$	$2.5X10^{4}$
Y-91m		2.0	$5.4X10^{1}$	2.0	$5.4X10^{1}$	$1.5X10^{6}$	$4.2X10^{7}$
Y-92		$2.0X10^{-1}$	5.4	$2.0X10^{-1}$	5.4	$3.6X10^{5}$	$9.6X10^{6}$
Y-93		$3.0X10^{-1}$	8.1	$3.0X10^{-1}$	8.1	$1.2X10^{5}$	$3.3X10^{6}$
Yb-169	Ytterbium (70)	4.0	$1.1X10^{2}$	1.0	$2.7X10^{1}$	$8.9X10^{2}$	$2.4X10^{4}$
Yb-175		$3.0X10^{1}$	$8.1X10^{2}$	$9.0X10^{-1}$	$2.4X10^{1}$	$6.6X10^{3}$	$1.8X10^{5}$
Zn-65	Zinc (30)	2.0	$5.4X10^{1}$	2.0	$5.4X10^{1}$	$3.0X10^{2}$	$8.2X10^{3}$
Zn-69		3.0	$8.1X10^{1}$	$6.0X10^{-1}$	$1.6X10^{1}$	$1.8X10^{6}$	$4.9X10^{7}$
Zn-69m (a)		3.0	$8.1X10^{1}$	$6.0X10^{-1}$	$1.6X10^{1}$	$1.2X10^{5}$	$3.3X10^{6}$
Zr-88	Zirconium (40)	3.0	$8.1X10^{1}$	3.0	$8.1X10^{1}$	$6.6X10^{2}$	$1.8X10^{4}$
Zr-93		Unlimited	Unlimited	Unlimited	Unlimited	$9.3X10^{-5}$	$2.5X10^{-3}$
Zr-95 (a)		2.0	$5.4X10^{1}$	$8.0X10^{-1}$	$2.2X10^{1}$	$7.9X10^{2}$	$2.1X10^{4}$
Zr-97 (a)		$4.0X10^{-1}$	$1.1X10^{1}$	$4.0X10^{-1}$	$1.1X10^{1}$	$7.1X10^{4}$	$1.9X10^{6}$

[a] A_1 and/or A_2 values include contributions from daughter nuclides with half-lives less than 10 days.
[b] The values of A_1 and A_2 in Curies (Ci) are approximate and for information only; the regulatory standard units are Terabecquerels (TBq).
[c] The quantity may be determined from a measurement of the rate of decay or a measurement of the radiation level at a prescribed distance from the source.
[d] These values apply only to compounds of uranium that take the chemical form of UF_6, UO_2F_2 and $UO_2(NO_3)_2$ in both normal and accident conditions of transport.

[e] These values apply only to compounds of uranium that take the chemical form of UO_3, UF_4, UCl_4 and hexavalent compounds in both normal and accident conditions of transport.
[f] These values apply to all compounds of uranium other than those specified in notes (d) and (e) of this table.
[g] These values apply to unirradiated uranium only.
[h] A_1 = 0.1 TBq (2.7 Ci) and A_2 = 0.001 TBq (0.027 Ci) for Cf-252 for domestic use.
[i] A_2 = 0.74 TBq (20 Ci) for Mo-99 for domestic use.

TABLE 5 — GENERAL VALUES FOR A_1 AND A_2

Contents	A_1 (TBq)	A_1 (Ci)	A_2 (TBq)	A_2 (Ci)	Activity concentration for exempt material (Bq/g)	Activity concentration for exempt material (Ci/g)	Activity limits for exempt consignments (Bq)	Activity limits for exempt consignments (Ci)
Only beta or gamma emitting radionuclides are known to be present	1×10^{-1}	2.7×10^{0}	2×10^{-2}	5.4×10^{-1}	1×10^{1}	2.7×10^{-10}	1×10^{4}	2.7×10^{-7}
Only alpha emitting radionuclides are known to be present	2×10^{-1}	5.4×10^{0}	9×10^{-5}	2.4×10^{-3}	1×10^{-1}	2.7×10^{-12}	1×10^{3}	2.7×10^{-8}
No relevant data are available	1×10^{-3}	2.7×10^{-2}	9×10^{-5}	2.4×10^{-3}	1×10^{-1}	2.7×10^{-12}	1×10^{3}	2.7×10^{-8}

TABLE 6 — ACTIVITY-MASS RELATIONSHIPS FOR URANIUM

-

Uranium Enrichment[1] wt % U-235 present	Specific Activity TBq/g	Specific Activity Ci/g
0.45	1.8×10^{-8}	5.0×10^{-7}
0.72	2.6×10^{-8}	7.1×10^{-7}
1	2.8×10^{-8}	7.6×10^{-7}
1.5	3.7×10^{-8}	1.0×10^{-6}
5	1.0×10^{-7}	2.7×10^{-6}
10	1.8×10^{-7}	4.8×10^{-6}
20	3.7×10^{-7}	1.0×10^{-5}
35	7.4×10^{-7}	2.0×10^{-5}
50	9.3×10^{-7}	2.5×10^{-5}
90	2.2×10^{-6}	5.8×10^{-5}
93	2.6×10^{-6}	7.0×10^{-5}
95	3.4×10^{-6}	9.1×10^{-5}

[1] The figures for uranium include representative values for the activity of the uranium-234 that is concentrated during the enrichment process.

Table 7 — EXEMPT MATERIAL ACTIVITY CONCENTRATIONS AND EXEMPT CONSIGNMENT ACTIVITY LIMITS FOR RADIONUCLIDES

Symbol of radionuclide	Element and atomic number	Activity concentration for exempt material (Bq/g)	Activity concentration for exempt material (Ci/g)	Activity limit for exempt consignment (Bq)	Activity limit for exempt consignment (Ci)
Ac-225	Actinium (89)	$1.0X10^{1}$	$2.7X10^{-10}$	$1.0X10^{4}$	$2.7X10^{-7}$
Ac-227		$1.0X10^{-1}$	$2.7X10^{-12}$	$1.0X10^{3}$	$2.7X10^{-8}$
Ac-228		$1.0X10^{1}$	$2.7X10^{-10}$	$1.0X10^{6}$	$2.7X10^{-5}$
Ag-105	Silver (47)	$1.0X10^{2}$	$2.7X10^{-9}$	$1.0X10^{6}$	$2.7X10^{-5}$
Ag-108m (b)		$1.0X10^{1}$	$2.7X10^{-10}$	$1.0X10^{6}$	$2.7X10^{-5}$
Ag-110m		$1.0X10^{1}$	$2.7X10^{-10}$	$1.0X10^{6}$	$2.7X10^{-5}$
Ag-111		$1.0X10^{3}$	$2.7X10^{-8}$	$1.0X10^{6}$	$2.7X10^{-5}$
Al-26	Aluminum (13)	$1.0X10^{1}$	$2.7X10^{-10}$	$1.0X10^{5}$	$2.7X10^{-6}$
Am-241	Americium (95)	1.0	$2.7X10^{-11}$	$1.0X10^{4}$	$2.7X10^{-7}$
Am-242m (b)		1.0	$2.7X10^{-11}$	$1.0X10^{4}$	$2.7X10^{-7}$
Am-243 (b)		1.0	$2.7X10^{-11}$	$1.0X10^{3}$	$2.7X10^{-8}$
Ar-37	Argon (18)	$1.0X10^{6}$	$2.7X10^{-5}$	$1.0X10^{8}$	$2.7X10^{-3}$
Ar-39		$1.0X10^{7}$	$2.7X10^{-4}$	$1.0X10^{4}$	$2.7X10^{-7}$
Ar-41		$1.0X10^{2}$	$2.7X10^{-9}$	$1.0X10^{9}$	$2.7X10^{-2}$
As-72	Arsenic (33)	$1.0X10^{1}$	$2.7X10^{-10}$	$1.0X10^{5}$	$2.7X10^{-6}$
As-73		$1.0X10^{3}$	$2.7X10^{-8}$	$1.0X10^{7}$	$2.7X10^{-4}$
As-74		$1.0X10^{1}$	$2.7X10^{-10}$	$1.0X10^{6}$	$2.7X10^{-5}$
As-76		$1.0X10^{2}$	$2.7X10^{-9}$	$1.0X10^{5}$	$2.7X10^{-6}$
As-77		$1.0X10^{3}$	$2.7X10^{-8}$	$1.0X10^{6}$	$2.7X10^{-5}$
At-211	Astatine (85)	$1.0X10^{3}$	$2.7X10^{-8}$	$1.0X10^{7}$	$2.7X10^{-4}$
Au-193	Gold (79)	$1.0X10^{2}$	$2.7X10^{-9}$	$1.0X10^{7}$	$2.7X10^{-4}$
Au-194		$1.0X10^{1}$	$2.7X10^{-10}$	$1.0X10^{6}$	$2.7X10^{-5}$
Au-195		$1.0X10^{2}$	$2.7X10^{-9}$	$1.0X10^{7}$	$2.7X10^{-4}$
Au-198		$1.0X10^{2}$	$2.7X10^{-9}$	$1.0X10^{6}$	$2.7X10^{-5}$
Au-199		$1.0X10^{2}$	$2.7X10^{-9}$	$1.0X10^{6}$	$2.7X10^{-5}$
Ba-131	Barium (56)	$1.0X10^{2}$	$2.7X10^{-9}$	$1.0X10^{6}$	$2.7X10^{-5}$
Ba-133		$1.0X10^{2}$	$2.7X10^{-9}$	$1.0X10^{6}$	$2.7X10^{-5}$
Ba-133m		$1.0X10^{2}$	$2.7X10^{-9}$	$1.0X10^{6}$	$2.7X10^{-5}$
Ba-140 (b)		$1.0X10^{1}$	$2.7X10^{-10}$	$1.0X10^{5}$	$2.7X10^{-6}$
Be-7	Beryllium (4)	$1.0X10^{3}$	$2.7X10^{-8}$	$1.0X10^{7}$	$2.7X10^{-4}$
Be-10		$1.0X10^{4}$	$2.7X10^{-7}$	$1.0X10^{6}$	$2.7X10^{-5}$
Bi-205	Bismuth (83)	$1.0X10^{1}$	$2.7X10^{-10}$	$1.0X10^{6}$	$2.7X10^{-5}$
Bi-206		$1.0X10^{1}$	$2.7X10^{-10}$	$1.0X10^{5}$	$2.7X10^{-6}$
Bi-207		$1.0X10^{1}$	$2.7X10^{-10}$	$1.0X10^{6}$	$2.7X10^{-5}$
Bi-210		$1.0X10^{3}$	$2.7X10^{-8}$	$1.0X10^{6}$	$2.7X10^{-5}$

Symbol of radionuclide	Element and atomic number	Activity concentration for exempt material (Bq/g)	Activity concentration for exempt material (Ci/g)	Activity limit for exempt consignment (Bq)	Activity limit for exempt consignment (Ci)
Bi-210m		$1.0X10^{1}$	$2.7X10^{-10}$	$1.0X10^{5}$	$2.7X10^{-6}$
Bi-212 (b)		$1.0X10^{1}$	$2.7X10^{-10}$	$1.0X10^{5}$	$2.7X10^{-6}$
Bk-247	Berkelium (97)	1.0	$2.7X10^{-11}$	$1.0X10^{4}$	$2.7X10^{-7}$
Bk-249		$1.0X10^{3}$	$2.7X10^{-8}$	$1.0X10^{6}$	$2.7X10^{-5}$
Br-76	Bromine (35)	$1.0X10^{1}$	$2.7X10^{-10}$	$1.0X10^{5}$	$2.7X10^{-6}$
Br-77		$1.0X10^{2}$	$2.7X10^{-9}$	$1.0X10^{6}$	$2.7X10^{-5}$
Br-82		$1.0X10^{1}$	$2.7X10^{-10}$	$1.0X10^{6}$	$2.7X10^{-5}$
C-11	Carbon (6)	$1.0X10^{1}$	$2.7X10^{-10}$	$1.0X10^{6}$	$2.7X10^{-5}$
C-14		$1.0X10^{4}$	$2.7X10^{-7}$	$1.0X10^{7}$	$2.7X10^{-4}$
Ca-41	Calcium (20)	$1.0X10^{5}$	$2.7X10^{-6}$	$1.0X10^{7}$	$2.7X10^{-4}$
Ca-45		$1.0X10^{4}$	$2.7X10^{-7}$	$1.0X10^{7}$	$2.7X10^{-4}$
Ca-47		$1.0X10^{1}$	$2.7X10^{-10}$	$1.0X10^{6}$	$2.7X10^{-5}$
Cd-109	Cadmium (48)	$1.0X10^{4}$	$2.7X10^{-7}$	$1.0X10^{6}$	$2.7X10^{-5}$
Cd-113m		$1.0X10^{3}$	$2.7X10^{-8}$	$1.0X10^{6}$	$2.7X10^{-5}$
Cd-115		$1.0X10^{2}$	$2.7X10^{-9}$	$1.0X10^{6}$	$2.7X10^{-5}$
Cd-115m		$1.0X10^{3}$	$2.7X10^{-8}$	$1.0X10^{6}$	$2.7X10^{-5}$
Ce-139	Cerium (58)	$1.0X10^{2}$	$2.7X10^{-9}$	$1.0X10^{6}$	$2.7X10^{-5}$
Ce-141		$1.0X10^{2}$	$2.7X10^{-9}$	$1.0X10^{7}$	$2.7X10^{-4}$
Ce-143		$1.0X10^{2}$	$2.7X10^{-9}$	$1.0X10^{6}$	$2.7X10^{-5}$
Ce-144 (b)		$1.0X10^{2}$	$2.7X10^{-9}$	$1.0X10^{5}$	$2.7X10^{-6}$
Cf-248	Californium (98)	$1.0X10^{1}$	$2.7X10^{-10}$	$1.0X10^{4}$	$2.7X10^{-7}$
Cf-249		1.0	$2.7X10^{-11}$	$1.0X10^{3}$	$2.7X10^{-8}$
Cf-250		$1.0X10^{1}$	$2.7X10^{-10}$	$1.0X10^{4}$	$2.7X10^{-7}$
Cf-251		1.0	$2.7X10^{-11}$	$1.0X10^{3}$	$2.7X10^{-8}$
Cf-252		$1.0X10^{1}$	$2.7X10^{-10}$	$1.0X10^{4}$	$2.7X10^{-7}$
Cf-253		$1.0X10^{2}$	$2.7X10^{-9}$	$1.0X10^{5}$	$2.7X10^{-6}$
Cf-254		1.0	$2.7X10^{-11}$	$1.0X10^{3}$	$2.7X10^{-8}$
Cl-36	Chlorine (17)	$1.0X10^{4}$	$2.7X10^{-7}$	$1.0X10^{6}$	$2.7X10^{-5}$
Cl-38		$1.0X10^{1}$	$2.7X10^{-10}$	$1.0X10^{5}$	$2.7X10^{-6}$
Cm-240	Curium (96)	$1.0X10^{2}$	$2.7X10^{-9}$	$1.0X10^{5}$	$2.7X10^{-6}$
Cm-241		$1.0X10^{2}$	$2.7X10^{-9}$	$1.0X10^{6}$	$2.7X10^{-5}$
Cm-242		$1.0X10^{2}$	$2.7X10^{-9}$	$1.0X10^{5}$	$2.7X10^{-6}$
Cm-243		1.0	$2.7X10^{-11}$	$1.0X10^{4}$	$2.7X10^{-7}$
Cm-244		$1.0X10^{1}$	$2.7X10^{-10}$	$1.0X10^{4}$	$2.7X10^{-7}$
Cm-245		1.0	$2.7X10^{-11}$	$1.0X10^{3}$	$2.7X10^{-8}$
Cm-246		1.0	$2.7X10^{-11}$	$1.0X10^{3}$	$2.7X10^{-8}$
Cm-247		1.0	$2.7X10^{-11}$	$1.0X10^{4}$	$2.7X10^{-7}$

Symbol of radionuclide	Element and atomic number	Activity concentration for exempt material (Bq/g)	Activity concentration for exempt material (Ci/g)	Activity limit for exempt consignment (Bq)	Activity limit for exempt consignment (Ci)
Cm-248		1.0	$2.7X10^{-11}$	$1.0X10^{3}$	$2.7X10^{-8}$
Co-55	Cobalt (27)	$1.0X10^{1}$	$2.7X10^{-10}$	$1.0X10^{6}$	$2.7X10^{-5}$
Co-56		$1.0X10^{1}$	$2.7X10^{-10}$	$1.0X10^{5}$	$2.7X10^{-6}$
Co-57		$1.0X10^{2}$	$2.7X10^{-9}$	$1.0X10^{6}$	$2.7X10^{-5}$
Co-58		$1.0X10^{1}$	$2.7X10^{-10}$	$1.0X10^{6}$	$2.7X10^{-5}$
Co-58m		$1.0X10^{4}$	$2.7X10^{-7}$	$1.0X10^{7}$	$2.7X10^{-4}$
Co-60		$1.0X10^{1}$	$2.7X10^{-10}$	$1.0X10^{5}$	$2.7X10^{-6}$
Cr-51	Chromium (24)	$1.0X10^{3}$	$2.7X10^{-8}$	$1.0X10^{7}$	$2.7X10^{-4}$
Cs-129	Cesium (55)	$1.0X10^{2}$	$2.7X10^{-9}$	$1.0X10^{5}$	$2.7X10^{-6}$
Cs-131		$1.0X10^{3}$	$2.7X10^{-8}$	$1.0X10^{6}$	$2.7X10^{-5}$
Cs-132		$1.0X10^{1}$	$2.7X10^{-10}$	$1.0X10^{5}$	$2.7X10^{-6}$
Cs-134		$1.0X10^{1}$	$2.7X10^{-10}$	$1.0X10^{4}$	$2.7X10^{-7}$
Cs-134m		$1.0X10^{3}$	$2.7X10^{-8}$	$1.0X10^{5}$	$2.7X10^{-6}$
Cs-135		$1.0X10^{4}$	$2.7X10^{-7}$	$1.0X10^{7}$	$2.7X10^{-4}$
Cs-136		$1.0X10^{1}$	$2.7X10^{-10}$	$1.0X10^{5}$	$2.7X10^{-6}$
Cs-137 (b)		$1.0X10^{1}$	$2.7X10^{-10}$	$1.0X10^{4}$	$2.7X10^{-7}$
Cu-64	Copper (29)	$1.0X10^{2}$	$2.7X10^{-9}$	$1.0X10^{6}$	$2.7X10^{-5}$
Cu-67		$1.0X10^{2}$	$2.7X10^{-9}$	$1.0X10^{6}$	$2.7X10^{-5}$
Dy-159	Dysprosium (66)	$1.0X10^{3}$	$2.7X10^{-8}$	$1.0X10^{7}$	$2.7X10^{-4}$
Dy-165		$1.0X10^{3}$	$2.7X10^{-8}$	$1.0X10^{6}$	$2.7X10^{-5}$
Dy-166		$1.0X10^{3}$	$2.7X10^{-8}$	$1.0X10^{6}$	$2.7X10^{-5}$
Er-169	Erbium (68)	$1.0X10^{4}$	$2.7X10^{-7}$	$1.0X10^{7}$	$2.7X10^{-4}$
Er-171		$1.0X10^{2}$	$2.7X10^{-9}$	$1.0X10^{6}$	$2.7X10^{-5}$
Eu-147	Europium (63)	$1.0X10^{2}$	$2.7X10^{-9}$	$1.0X10^{6}$	$2.7X10^{-5}$
Eu-148		$1.0X10^{1}$	$2.7X10^{-10}$	$1.0X10^{6}$	$2.7X10^{-5}$
Eu-149		$1.0X10^{2}$	$2.7X10^{-9}$	$1.0X10^{7}$	$2.7X10^{-4}$
Eu-150 (short lived)		$1.0X10^{3}$	$2.7X10^{-8}$	$1.0X10^{6}$	$2.7X10^{-5}$
Eu-150 (long lived)		$1.0X10^{1}$	$2.7X10^{-10}$	$1.0X10^{6}$	$2.7X10^{-5}$
Eu-152		$1.0X10^{1}$	$2.7X10^{-10}$	$1.0X10^{6}$	$2.7X10^{-5}$
Eu-152m		$1.0X10^{2}$	$2.7X10^{-9}$	$1.0X10^{6}$	$2.7X10^{-5}$
Eu-154		$1.0X10^{1}$	$2.7X10^{-10}$	$1.0X10^{6}$	$2.7X10^{-5}$
Eu-155		$1.0X10^{2}$	$2.7X10^{-9}$	$1.0X10^{7}$	$2.7X10^{-4}$
Eu-156		$1.0X10^{1}$	$2.7X10^{-10}$	$1.0X10^{6}$	$2.7X10^{-5}$
F-18	Fluorine (9)	$1.0X10^{1}$	$2.7X10^{-10}$	$1.0X10^{6}$	$2.7X10^{-5}$
Fe-52	Iron (26)	$1.0X10^{1}$	$2.7X10^{-10}$	$1.0X10^{6}$	$2.7X10^{-5}$
Fe-55		$1.0X10^{4}$	$2.7X10^{-7}$	$1.0X10^{6}$	$2.7X10^{-5}$
Fe-59		$1.0X10^{1}$	$2.7X10^{-10}$	$1.0X10^{6}$	$2.7X10^{-5}$

Symbol of radionuclide	Element and atomic number	Activity concentration for exempt material (Bq/g)	Activity concentration for exempt material (Ci/g)	Activity limit for exempt consignment (Bq)	Activity limit for exempt consignment (Ci)
Fe-60		$1.0X10^{2}$	$2.7X10^{-9}$	$1.0X10^{5}$	$2.7X10^{-6}$
Ga-67	Gallium (31)	$1.0X10^{2}$	$2.7X10^{-9}$	$1.0X10^{6}$	$2.7X10^{-5}$
Ga-68		$1.0X10^{1}$	$2.7X10^{-10}$	$1.0X10^{5}$	$2.7X10^{-6}$
Ga-72		$1.0X10^{1}$	$2.7X10^{-10}$	$1.0X10^{5}$	$2.7X10^{-6}$
Gd-146	Gadolinium (64)	$1.0X10^{1}$	$2.7X10^{-10}$	$1.0X10^{6}$	$2.7X10^{-5}$
Gd-148		$1.0X10^{1}$	$2.7X10^{-10}$	$1.0X10^{4}$	$2.7X10^{-7}$
Gd-153		$1.0X10^{2}$	$2.7X10^{-9}$	$1.0X10^{7}$	$2.7X10^{-4}$
Gd-159		$1.0X10^{3}$	$2.7X10^{-8}$	$1.0X10^{6}$	$2.7X10^{-5}$
Ge-68	Germanium (32)	$1.0X10^{1}$	$2.7X10^{-10}$	$1.0X10^{5}$	$2.7X10^{-6}$
Ge-71		$1.0X10^{4}$	$2.7X10^{-7}$	$1.0X10^{8}$	$2.7X10^{-3}$
Ge-77		$1.0X10^{1}$	$2.7X10^{-10}$	$1.0X10^{5}$	$2.7X10^{-6}$
Hf-172	Hafnium (72)	$1.0X10^{1}$	$2.7X10^{-10}$	$1.0X10^{6}$	$2.7X10^{-5}$
Hf-175		$1.0X10^{2}$	$2.7X10^{-9}$	$1.0X10^{6}$	$2.7X10^{-5}$
Hf-181		$1.0X10^{1}$	$2.7X10^{-10}$	$1.0X10^{6}$	$2.7X10^{-5}$
Hf-182		$1.0X10^{2}$	$2.7X10^{-9}$	$1.0X10^{6}$	$2.7X10^{-5}$
Hg-194	Mercury (80)	$1.0X10^{1}$	$2.7X10^{-10}$	$1.0X10^{6}$	$2.7X10^{-5}$
Hg-195m		$1.0X10^{2}$	$2.7X10^{-9}$	$1.0X10^{6}$	$2.7X10^{-5}$
Hg-197		$1.0X10^{2}$	$2.7X10^{-9}$	$1.0X10^{7}$	$2.7X10^{-4}$
Hg-197m		$1.0X10^{2}$	$2.7X10^{-9}$	$1.0X10^{6}$	$2.7X10^{-5}$
Hg-203		$1.0X10^{2}$	$2.7X10^{-9}$	$1.0X10^{5}$	$2.7X10^{-6}$
Ho-166	Holmium (67)	$1.0X10^{3}$	$2.7X10^{-8}$	$1.0X10^{5}$	$2.7X10^{-6}$
Ho-166m		$1.0X10^{1}$	$2.7X10^{-10}$	$1.0X10^{6}$	$2.7X10^{-5}$
I-123	Iodine (53)	$1.0X10^{2}$	$2.7X10^{-9}$	$1.0X10^{7}$	$2.7X10^{-4}$
I-124		$1.0X10^{1}$	$2.7X10^{-10}$	$1.0X10^{6}$	$2.7X10^{-5}$
I-125		$1.0X10^{3}$	$2.7X10^{-8}$	$1.0X10^{6}$	$2.7X10^{-5}$
I-126		$1.0X10^{2}$	$2.7X10^{-9}$	$1.0X10^{6}$	$2.7X10^{-5}$
I-129		$1.0X10^{2}$	$2.7X10^{-9}$	$1.0X10^{5}$	$2.7X10^{-6}$
I-131		$1.0X10^{2}$	$2.7X10^{-9}$	$1.0X10^{6}$	$2.7X10^{-5}$
I-132		$1.0X10^{1}$	$2.7X10^{-10}$	$1.0X10^{5}$	$2.7X10^{-6}$
I-133		$1.0X10^{1}$	$2.7X10^{-10}$	$1.0X10^{6}$	$2.7X10^{-5}$
I-134		$1.0X10^{1}$	$2.7X10^{-10}$	$1.0X10^{5}$	$2.7X10^{-6}$
I-135		$1.0X10^{1}$	$2.7X10^{-10}$	$1.0X10^{6}$	$2.7X10^{-5}$
In-111	Indium (49)	$1.0X10^{2}$	$2.7X10^{-9}$	$1.0X10^{6}$	$2.7X10^{-5}$
In-113m		$1.0X10^{2}$	$2.7X10^{-9}$	$1.0X10^{6}$	$2.7X10^{-5}$
In-114m		$1.0X10^{2}$	$2.7X10^{-9}$	$1.0X10^{6}$	$2.7X10^{-5}$
In-115m		$1.0X10^{2}$	$2.7X10^{-9}$	$1.0X10^{6}$	$2.7X10^{-5}$
Ir-189	Iridium (77)	$1.0X10^{2}$	$2.7X10^{-9}$	$1.0X10^{7}$	$2.7X10^{-4}$

Symbol of radionuclide	Element and atomic number	Activity concentration for exempt material (Bq/g)	Activity concentration for exempt material (Ci/g)	Activity limit for exempt consignment (Bq)	Activity limit for exempt consignment (Ci)
Ir-190		$1.0X10^{1}$	$2.7X10^{-10}$	$1.0X10^{6}$	$2.7X10^{-5}$
Ir-192		$1.0X10^{1}$	$2.7X10^{-10}$	$1.0X10^{4}$	$2.7X10^{-7}$
Ir-194		$1.0X10^{2}$	$2.7X10^{-9}$	$1.0X10^{5}$	$2.7X10^{-6}$
K-40	Potassium (19)	$1.0X10^{2}$	$2.7X10^{-9}$	$1.0X10^{6}$	$2.7X10^{-5}$
K-42		$1.0X10^{2}$	$2.7X10^{-9}$	$1.0X10^{6}$	$2.7X10^{-5}$
K-43		$1.0X10^{1}$	$2.7X10^{-10}$	$1.0X10^{6}$	$2.7X10^{-5}$
Kr-81	Krypton (36)	$1.0X10^{4}$	$2.7X10^{-7}$	$1.0X10^{7}$	$2.7X10^{-4}$
Kr-85		$1.0X10^{5}$	$2.7X10^{-6}$	$1.0X10^{4}$	$2.7X10^{-7}$
Kr-85m		$1.0X10^{3}$	$2.7X10^{-8}$	$1.0X10^{10}$	$2.7X10^{-1}$
Kr-87		$1.0X10^{2}$	$2.7X10^{-9}$	$1.0X10^{9}$	$2.7X10^{-2}$
La-137	Lanthanum (57)	$1.0X10^{3}$	$2.7X10^{-8}$	$1.0X10^{7}$	$2.7X10^{-4}$
La-140		$1.0X10^{1}$	$2.7X10^{-10}$	$1.0X10^{5}$	$2.7X10^{-6}$
Lu-172	Lutetium (71)	$1.0X10^{1}$	$2.7X10^{-10}$	$1.0X10^{6}$	$2.7X10^{-5}$
Lu-173		$1.0X10^{2}$	$2.7X10^{-9}$	$1.0X10^{7}$	$2.7X10^{-4}$
Lu-174		$1.0X10^{2}$	$2.7X10^{-9}$	$1.0X10^{7}$	$2.7X10^{-4}$
Lu-174m		$1.0X10^{2}$	$2.7X10^{-9}$	$1.0X10^{7}$	$2.7X10^{-4}$
Lu-177		$1.0X10^{3}$	$2.7X10^{-8}$	$1.0X10^{7}$	$2.7X10^{-4}$
Mg-28	Magnesium (12)	$1.0X10^{1}$	$2.7X10^{-10}$	$1.0X10^{5}$	$2.7X10^{-6}$
Mn-52	Manganese (25)	$1.0X10^{1}$	$2.7X10^{-10}$	$1.0X10^{5}$	$2.7X10^{-6}$
Mn-53		$1.0X10^{4}$	$2.7X10^{-7}$	$1.0X10^{9}$	$2.7X10^{-2}$
Mn-54		$1.0X10^{1}$	$2.7X10^{-10}$	$1.0X10^{6}$	$2.7X10^{-5}$
Mn-56		$1.0X10^{1}$	$2.7X10^{-10}$	$1.0X10^{5}$	$2.7X10^{-6}$
Mo-93	Molybdenum (42)	$1.0X10^{3}$	$2.7X10^{-8}$	$1.0X10^{8}$	$2.7X10^{-3}$
Mo-99		$1.0X10^{2}$	$2.7X10^{-9}$	$1.0X10^{6}$	$2.7X10^{-5}$
N-13	Nitrogen (7)	$1.0X10^{2}$	$2.7X10^{-9}$	$1.0X10^{9}$	$2.7X10^{-2}$
Na-22	Sodium (11)	$1.0X10^{1}$	$2.7X10^{-10}$	$1.0X10^{6}$	$2.7X10^{-5}$
Na-24		$1.0X10^{1}$	$2.7X10^{-10}$	$1.0X10^{5}$	$2.7X10^{-6}$
Nb-93m	Niobium (41)	$1.0X10^{4}$	$2.7X10^{-7}$	$1.0X10^{7}$	$2.7X10^{-4}$
Nb-94		$1.0X10^{1}$	$2.7X10^{-10}$	$1.0X10^{6}$	$2.7X10^{-5}$
Nb-95		$1.0X10^{1}$	$2.7X10^{-10}$	$1.0X10^{6}$	$2.7X10^{-5}$
Nb-97		$1.0X10^{1}$	$2.7X10^{-10}$	$1.0X10^{6}$	$2.7X10^{-5}$
Nd-147	Neodymium (60)	$1.0X10^{2}$	$2.7X10^{-9}$	$1.0X10^{6}$	$2.7X10^{-5}$
Nd-149		$1.0X10^{2}$	$2.7X10^{-9}$	$1.0X10^{6}$	$2.7X10^{-5}$
Ni-59	Nickel (28)	$1.0X10^{4}$	$2.7X10^{-7}$	$1.0X10^{8}$	$2.7X10^{-3}$
Ni-63		$1.0X10^{5}$	$2.7X10^{-6}$	$1.0X10^{8}$	$2.7X10^{-3}$
Ni-65		$1.0X10^{1}$	$2.7X10^{-10}$	$1.0X10^{6}$	$2.7X10^{-5}$
Np-235	Neptunium (93)	$1.0X10^{3}$	$2.7X10^{-8}$	$1.0X10^{7}$	$2.7X10^{-4}$

Symbol of radionuclide	Element and atomic number	Activity concentration for exempt material (Bq/g)	Activity concentration for exempt material (Ci/g)	Activity limit for exempt consignment (Bq)	Activity limit for exempt consignment (Ci)
Np-236 (short-lived)		$1.0X10^{3}$	$2.7X10^{-8}$	$1.0X10^{7}$	$2.7X10^{-4}$
Np-236 (long-lived)		$1.0X10^{2}$	$2.7X10^{-9}$	$1.0X10^{5}$	$2.7X10^{-6}$
Np-237 (b)		1.0	$2.7X10^{-11}$	$1.0X10^{3}$	$2.7X10^{-8}$
Np-239		$1.0X10^{2}$	$2.7X10^{-9}$	$1.0X10^{7}$	$2.7X10^{-4}$
Os-185	Osmium (76)	$1.0X10^{1}$	$2.7X10^{-10}$	$1.0X10^{6}$	$2.7X10^{-5}$
Os-191		$1.0X10^{2}$	$2.7X10^{-9}$	$1.0X10^{7}$	$2.7X10^{-4}$
Os-191m		$1.0X10^{3}$	$2.7X10^{-8}$	$1.0X10^{7}$	$2.7X10^{-4}$
Os-193		$1.0X10^{2}$	$2.7X10^{-9}$	$1.0X10^{6}$	$2.7X10^{-5}$
Os-194		$1.0X10^{2}$	$2.7X10^{-9}$	$1.0X10^{5}$	$2.7X10^{-6}$
P-32	Phosphorus (15)	$1.0X10^{3}$	$2.7X10^{-8}$	$1.0X10^{5}$	$2.7X10^{-6}$
P-33		$1.0X10^{5}$	$2.7X10^{-6}$	$1.0X10^{8}$	$2.7X10^{-3}$
Pa-230	Protactinium (91)	$1.0X10^{1}$	$2.7X10^{-10}$	$1.0X10^{6}$	$2.7X10^{-5}$
Pa-231		1.0	$2.7X10^{-11}$	$1.0X10^{3}$	$2.7X10^{-8}$
Pa-233		$1.0X10^{2}$	$2.7X10^{-9}$	$1.0X10^{7}$	$2.7X10^{-4}$
Pb-201	Lead (82)	$1.0X10^{1}$	$2.7X10^{-10}$	$1.0X10^{6}$	$2.7X10^{-5}$
Pb-202		$1.0X10^{3}$	$2.7X10^{-8}$	$1.0X10^{6}$	$2.7X10^{-5}$
Pb-203		$1.0X10^{2}$	$2.7X10^{-9}$	$1.0X10^{6}$	$2.7X10^{-5}$
Pb-205		$1.0X10^{4}$	$2.7X10^{-7}$	$1.0X10^{7}$	$2.7X10^{-4}$
Pb-210 (b)		$1.0X10^{1}$	$2.7X10^{-10}$	$1.0X10^{4}$	$2.7X10^{-7}$
Pb-212 (b)		$1.0X10^{1}$	$2.7X10^{-10}$	$1.0X10^{5}$	$2.7X10^{-6}$
Pd-103	Palladium (46)	$1.0X10^{3}$	$2.7X10^{-8}$	$1.0X10^{8}$	$2.7X10^{-3}$
Pd-107		$1.0X10^{5}$	$2.7X10^{-6}$	$1.0X10^{8}$	$2.7X10^{-3}$
Pd-109		$1.0X10^{3}$	$2.7X10^{-8}$	$1.0X10^{6}$	$2.7X10^{-5}$
Pm-143	Promethium (61)	$1.0X10^{2}$	$2.7X10^{-9}$	$1.0X10^{6}$	$2.7X10^{-5}$
Pm-144		$1.0X10^{1}$	$2.7X10^{-10}$	$1.0X10^{6}$	$2.7X10^{-5}$
Pm-145		$1.0X10^{3}$	$2.7X10^{-8}$	$1.0X10^{7}$	$2.7X10^{-4}$
Pm-147		$1.0X10^{4}$	$2.7X10^{-7}$	$1.0X10^{7}$	$2.7X10^{-4}$
Pm-148m		$1.0X10^{1}$	$2.7X10^{-10}$	$1.0X10^{6}$	$2.7X10^{-5}$
Pm-149		$1.0X10^{3}$	$2.7X10^{-8}$	$1.0X10^{6}$	$2.7X10^{-5}$
Pm-151		$1.0X10^{2}$	$2.7X10^{-9}$	$1.0X10^{6}$	$2.7X10^{-5}$
Po-210	Polonium (84)	$1.0X10^{1}$	$2.7X10^{-10}$	$1.0X10^{4}$	$2.7X10^{-7}$
Pr-142	Praseodymium (59)	$1.0X10^{2}$	$2.7X10^{-9}$	$1.0X10^{5}$	$2.7X10^{-6}$
Pr-143		$1.0X10^{4}$	$2.7X10^{-7}$	$1.0X10^{6}$	$2.7X10^{-5}$
Pt-188	Platinum (78)	$1.0X10^{1}$	$2.7X10^{-10}$	$1.0X10^{6}$	$2.7X10^{-5}$
Pt-191		$1.0X10^{2}$	$2.7X10^{-9}$	$1.0X10^{6}$	$2.7X10^{-5}$
Pt-193		$1.0X10^{4}$	$2.7X10^{-7}$	$1.0X10^{7}$	$2.7X10^{-4}$
Pt-193m		$1.0X10^{3}$	$2.7X10^{-8}$	$1.0X10^{7}$	$2.7X10^{-4}$

Symbol of radionuclide	Element and atomic number	Activity concentration for exempt material (Bq/g)	Activity concentration for exempt material (Ci/g)	Activity limit for exempt consignment (Bq)	Activity limit for exempt consignment (Ci)
Pt-195m		$1.0X10^{2}$	$2.7X10^{-9}$	$1.0X10^{6}$	$2.7X10^{-5}$
Pt-197		$1.0X10^{3}$	$2.7X10^{-8}$	$1.0X10^{6}$	$2.7X10^{-5}$
Pt-197m		$1.0X10^{2}$	$2.7X10^{-9}$	$1.0X10^{6}$	$2.7X10^{-5}$
Pu-236	Plutonium (94)	$1.0X10^{1}$	$2.7X10^{-10}$	$1.0X10^{4}$	$2.7X10^{-7}$
Pu-237		$1.0X10^{3}$	$2.7X10^{-8}$	$1.0X10^{7}$	$2.7X10^{-4}$
Pu-238		1.0	$2.7X10^{-11}$	$1.0X10^{4}$	$2.7X10^{-7}$
Pu-239		1.0	$2.7X10^{-11}$	$1.0X10^{4}$	$2.7X10^{-7}$
Pu-240		1.0	$2.7X10^{-11}$	$1.0X10^{3}$	$2.7X10^{-8}$
Pu-241		$1.0X10^{2}$	$2.7X10^{-9}$	$1.0X10^{5}$	$2.7X10^{-6}$
Pu-242		1.0	$2.7X10^{-11}$	$1.0X10^{4}$	$2.7X10^{-7}$
Pu-244		1.0	$2.7X10^{-11}$	$1.0X10^{4}$	$2.7X10^{-7}$
Ra-223 (b)	Radium (88)	$1.0X10^{2}$	$2.7X10^{-9}$	$1.0X10^{5}$	$2.7X10^{-6}$
Ra-224 (b)		$1.0X10^{1}$	$2.7X10^{-10}$	$1.0X10^{5}$	$2.7X10^{-6}$
Ra-225		$1.0X10^{2}$	$2.7X10^{-9}$	$1.0X10^{5}$	$2.7X10^{-6}$
Ra-226 (b)		$1.0X10^{1}$	$2.7X10^{-10}$	$1.0X10^{4}$	$2.7X10^{-7}$
Ra-228 (b)		$1.0X10^{1}$	$2.7X10^{-10}$	$1.0X10^{5}$	$2.7X10^{-6}$
Rb-81	Rubidium (37)	$1.0X10^{1}$	$2.7X10^{-10}$	$1.0X10^{6}$	$2.7X10^{-5}$
Rb-83		$1.0X10^{2}$	$2.7X10^{-9}$	$1.0X10^{6}$	$2.7X10^{-5}$
Rb-84		$1.0X10^{1}$	$2.7X10^{-10}$	$1.0X10^{6}$	$2.7X10^{-5}$
Rb-86		$1.0X10^{2}$	$2.7X10^{-9}$	$1.0X10^{5}$	$2.7X10^{-6}$
Rb-87		$1.0X10^{4}$	$2.7X10^{-7}$	$1.0X10^{7}$	$2.7X10^{-4}$
Rb(nat)		$1.0X10^{4}$	$2.7X10^{-7}$	$1.0X10^{7}$	$2.7X10^{-4}$
Re-184	Rhenium (75)	$1.0X10^{1}$	$2.7X10^{-10}$	$1.0X10^{6}$	$2.7X10^{-5}$
Re-184m		$1.0X10^{2}$	$2.7X10^{-9}$	$1.0X10^{6}$	$2.7X10^{-5}$
Re-186		$1.0X10^{3}$	$2.7X10^{-8}$	$1.0X10^{6}$	$2.7X10^{-5}$
Re-187		$1.0X10^{6}$	$2.7X10^{-5}$	$1.0X10^{9}$	$2.7X10^{-2}$
Re-188		$1.0X10^{2}$	$2.7X10^{-9}$	$1.0X10^{5}$	$2.7X10^{-6}$
Re-189		$1.0X10^{2}$	$2.7X10^{-9}$	$1.0X10^{6}$	$2.7X10^{-5}$
Re(nat)		$1.0X10^{6}$	$2.7X10^{-5}$	$1.0X10^{9}$	$2.7X10^{-2}$
Rh-99	Rhodium (45)	$1.0X10^{1}$	$2.7X10^{-10}$	$1.0X10^{6}$	$2.7X10^{-5}$
Rh-101		$1.0X10^{2}$	$2.7X10^{-9}$	$1.0X10^{7}$	$2.7X10^{-4}$
Rh-102		$1.0X10^{1}$	$2.7X10^{-10}$	$1.0X10^{6}$	$2.7X10^{-5}$
Rh-102m		$1.0X10^{2}$	$2.7X10^{-9}$	$1.0X10^{6}$	$2.7X10^{-5}$
Rh-103m		$1.0X10^{4}$	$2.7X10^{-7}$	$1.0X10^{8}$	$2.7X10^{-3}$
Rh-105		$1.0X10^{2}$	$2.7X10^{-9}$	$1.0X10^{7}$	$2.7X10^{-4}$
Rn-222 (b)	Radon (86)	$1.0X10^{1}$	$2.7X10^{-10}$	$1.0X10^{8}$	$2.7X10^{-3}$
Ru-97	Ruthenium (44)	$1.0X10^{2}$	$2.7X10^{-9}$	$1.0X10^{7}$	$2.7X10^{-4}$

Symbol of radionuclide	Element and atomic number	Activity concentration for exempt material (Bq/g)	Activity concentration for exempt material (Ci/g)	Activity limit for exempt consignment (Bq)	Activity limit for exempt consignment (Ci)
Ru-103		$1.0X10^{2}$	$2.7X10^{-9}$	$1.0X10^{6}$	$2.7X10^{-5}$
Ru-105		$1.0X10^{1}$	$2.7X10^{-10}$	$1.0X10^{6}$	$2.7X10^{-5}$
Ru-106 (b)		$1.0X10^{2}$	$2.7X10^{-9}$	$1.0X10^{5}$	$2.7X10^{-6}$
S-35	Sulphur (16)	$1.0X10^{5}$	$2.7X10^{-6}$	$1.0X10^{8}$	$2.7X10^{-3}$
Sb-122	Antimony (51)	$1.0X10^{2}$	$2.7X10^{-9}$	$1.0X10^{4}$	$2.7X10^{-7}$
Sb-124		$1.0X10^{1}$	$2.7X10^{-10}$	$1.0X10^{6}$	$2.7X10^{-5}$
Sb-125		$1.0X10^{2}$	$2.7X10^{-9}$	$1.0X10^{6}$	$2.7X10^{-5}$
Sb-126		$1.0X10^{1}$	$2.7X10^{-10}$	$1.0X10^{5}$	$2.7X10^{-6}$
Sc-44	Scandium (21)	$1.0X10^{1}$	$2.7X10^{-10}$	$1.0X10^{5}$	$2.7X10^{-6}$
Sc-46		$1.0X10^{1}$	$2.7X10^{-10}$	$1.0X10^{6}$	$2.7X10^{-5}$
Sc-47		$1.0X10^{2}$	$2.7X10^{-9}$	$1.0X10^{6}$	$2.7X10^{-5}$
Sc-48		$1.0X10^{1}$	$2.7X10^{-10}$	$1.0X10^{5}$	$2.7X10^{-6}$
Se-75	Selenium (34)	$1.0X10^{2}$	$2.7X10^{-9}$	$1.0X10^{6}$	$2.7X10^{-5}$
Se-79		$1.0X10^{4}$	$2.7X10^{-7}$	$1.0X10^{7}$	$2.7X10^{-4}$
Si-31	Silicon (14)	$1.0X10^{3}$	$2.7X10^{-8}$	$1.0X10^{6}$	$2.7X10^{-5}$
Si-32		$1.0X10^{3}$	$2.7X10^{-8}$	$1.0X10^{6}$	$2.7X10^{-5}$
Sm-145	Samarium (62)	$1.0X10^{2}$	$2.7X10^{-9}$	$1.0X10^{7}$	$2.7X10^{-4}$
Sm-147		$1.0X10^{1}$	$2.7X10^{-10}$	$1.0X10^{4}$	$2.7X10^{-7}$
Sm-151		$1.0X10^{4}$	$2.7X10^{-7}$	$1.0X10^{8}$	$2.7X10^{-3}$
Sm-153		$1.0X10^{2}$	$2.7X10^{-9}$	$1.0X10^{6}$	$2.7X10^{-5}$
Sn-113	Tin (50)	$1.0X10^{3}$	$2.7X10^{-8}$	$1.0X10^{7}$	$2.7X10^{-4}$
Sn-117m		$1.0X10^{2}$	$2.7X10^{-9}$	$1.0X10^{6}$	$2.7X10^{-5}$
Sn-119m		$1.0X10^{3}$	$2.7X10^{-8}$	$1.0X10^{7}$	$2.7X10^{-4}$
Sn-121m		$1.0X10^{3}$	$2.7X10^{-8}$	$1.0X10^{7}$	$2.7X10^{-4}$
Sn-123		$1.0X10^{3}$	$2.7X10^{-8}$	$1.0X10^{6}$	$2.7X10^{-5}$
Sn-125		$1.0X10^{2}$	$2.7X10^{-9}$	$1.0X10^{5}$	$2.7X10^{-6}$
Sn-126		$1.0X10^{1}$	$2.7X10^{-10}$	$1.0X10^{5}$	$2.7X10^{-6}$
Sr-82	Strontium (38)	$1.0X10^{1}$	$2.7X10^{-10}$	$1.0X10^{5}$	$2.7X10^{-6}$
Sr-85		$1.0X10^{2}$	$2.7X10^{-9}$	$1.0X10^{6}$	$2.7X10^{-5}$
Sr-85m		$1.0X10^{2}$	$2.7X10^{-9}$	$1.0X10^{7}$	$2.7X10^{-4}$
Sr-87m		$1.0X10^{2}$	$2.7X10^{-9}$	$1.0X10^{6}$	$2.7X10^{-5}$
Sr-89		$1.0X10^{3}$	$2.7X10^{-8}$	$1.0X10^{6}$	$2.7X10^{-5}$
Sr-90 (b)		$1.0X10^{2}$	$2.7X10^{-9}$	$1.0X10^{4}$	$2.7X10^{-7}$
Sr-91		$1.0X10^{1}$	$2.7X10^{-10}$	$1.0X10^{5}$	$2.7X10^{-6}$
Sr-92		$1.0X10^{1}$	$2.7X10^{-10}$	$1.0X10^{6}$	$2.7X10^{-5}$
T (H-3)	Tritium (1)	$1.0X10^{6}$	$2.7X10^{-5}$	$1.0X10^{9}$	$2.7X10^{-2}$
Ta-178 (long-lived)	Tantalum (73)	$1.0X10^{1}$	$2.7X10^{-10}$	$1.0X10^{6}$	$2.7X10^{-5}$

Symbol of radionuclide	Element and atomic number	Activity concentration for exempt material (Bq/g)	Activity concentration for exempt material (Ci/g)	Activity limit for exempt consignment (Bq)	Activity limit for exempt consignment (Ci)
Ta-179		$1.0X10^{3}$	$2.7X10^{-8}$	$1.0X10^{7}$	$2.7X10^{-4}$
Ta-182		$1.0X10^{1}$	$2.7X10^{-10}$	$1.0X10^{4}$	$2.7X10^{-7}$
Tb-157	Terbium (65)	$1.0X10^{4}$	$2.7X10^{-7}$	$1.0X10^{7}$	$2.7X10^{-4}$
Tb-158		$1.0X10^{1}$	$2.7X10^{-10}$	$1.0X10^{6}$	$2.7X10^{-5}$
Tb-160		$1.0X10^{1}$	$2.7X10^{-10}$	$1.0X10^{6}$	$2.7X10^{-5}$
Tc-95m	Technetium (43)	$1.0X10^{1}$	$2.7X10^{-10}$	$1.0X10^{6}$	$2.7X10^{-5}$
Tc-96		$1.0X10^{1}$	$2.7X10^{-10}$	$1.0X10^{6}$	$2.7X10^{-5}$
Tc-96m		$1.0X10^{3}$	$2.7X10^{-8}$	$1.0X10^{7}$	$2.7X10^{-4}$
Tc-97		$1.0X10^{3}$	$2.7X10^{-8}$	$1.0X10^{8}$	$2.7X10^{-3}$
Tc-97m		$1.0X10^{3}$	$2.7X10^{-8}$	$1.0X10^{7}$	$2.7X10^{-4}$
Tc-98		$1.0X10^{1}$	$2.7X10^{-10}$	$1.0X10^{6}$	$2.7X10^{-5}$
Tc-99		$1.0X10^{4}$	$2.7X10^{-7}$	$1.0X10^{7}$	$2.7X10^{-4}$
Tc-99m		$1.0X10^{2}$	$2.7X10^{-9}$	$1.0X10^{7}$	$2.7X10^{-4}$
Te-121	Tellurium (52)	$1.0X10^{1}$	$2.7X10^{-10}$	$1.0X10^{6}$	$2.7X10^{-5}$
Te-121m		$1.0X10^{2}$	$2.7X10^{-9}$	$1.0X10^{5}$	$2.7X10^{-6}$
Te-123m		$1.0X10^{2}$	$2.7X10^{-9}$	$1.0X10^{7}$	$2.7X10^{-4}$
Te-125m		$1.0X10^{3}$	$2.7X10^{-8}$	$1.0X10^{7}$	$2.7X10^{-4}$
Te-127		$1.0X10^{3}$	$2.7X10^{-8}$	$1.0X10^{6}$	$2.7X10^{-5}$
Te-127m		$1.0X10^{3}$	$2.7X10^{-8}$	$1.0X10^{7}$	$2.7X10^{-4}$
Te-129		$1.0X10^{2}$	$2.7X10^{-9}$	$1.0X10^{6}$	$2.7X10^{-5}$
Te-129m		$1.0X10^{3}$	$2.7X10^{-8}$	$1.0X10^{6}$	$2.7X10^{-5}$
Te-131m		$1.0X10^{1}$	$2.7X10^{-10}$	$1.0X10^{6}$	$2.7X10^{-5}$
Te-132		$1.0X10^{2}$	$2.7X10^{-9}$	$1.0X10^{7}$	$2.7X10^{-4}$
Th-227	Thorium (90)	$1.0X10^{1}$	$2.7X10^{-10}$	$1.0X10^{4}$	$2.7X10^{-7}$
Th-228 (b)		1.0	$2.7X10^{-11}$	$1.0X10^{4}$	$2.7X10^{-7}$
Th-229 (b)		1.0	$2.7X10^{-11}$	$1.0X10^{3}$	$2.7X10^{-8}$
Th-230		1.0	$2.7X10^{-11}$	$1.0X10^{4}$	$2.7X10^{-7}$
Th-231		$1.0X10^{3}$	$2.7X10^{-8}$	$1.0X10^{7}$	$2.7X10^{-4}$
Th-232		$1.0X10^{1}$	$2.7X10^{-10}$	$1.0X10^{4}$	$2.7X10^{-7}$
Th-234 (b)		$1.0X10^{3}$	$2.7X10^{-8}$	$1.0X10^{5}$	$2.7X10^{-6}$
Th (nat) (b)		1.0	$2.7X10^{-11}$	$1.0X10^{3}$	$2.7X10^{-8}$
Ti-44	Titanium (22)	$1.0X10^{1}$	$2.7X10^{-10}$	$1.0X10^{5}$	$2.7X10^{-6}$
Tl-200	Thallium (81)	$1.0X10^{1}$	$2.7X10^{-10}$	$1.0X10^{6}$	$2.7X10^{-5}$
Tl-201		$1.0X10^{2}$	$2.7X10^{-9}$	$1.0X10^{6}$	$2.7X10^{-5}$
Tl-202		$1.0X10^{2}$	$2.7X10^{-9}$	$1.0X10^{6}$	$2.7X10^{-5}$
Tl-204		$1.0X10^{4}$	$2.7X10^{-7}$	$1.0X10^{4}$	$2.7X10^{-7}$
Tm-167	Thulium (69)	$1.0X10^{2}$	$2.7X10^{-9}$	$1.0X10^{6}$	$2.7X10^{-5}$

Symbol of radionuclide	Element and atomic number	Activity concentration for exempt material (Bq/g)	Activity concentration for exempt material (Ci/g)	Activity limit for exempt consignment (Bq)	Activity limit for exempt consignment (Ci)
Tm-170		$1.0X10^{3}$	$2.7X10^{-8}$	$1.0X10^{6}$	$2.7X10^{-5}$
Tm-171		$1.0X10^{4}$	$2.7X10^{-7}$	$1.0X10^{8}$	$2.7X10^{-3}$
U-230 (fast lung absorption) (b),(d)	Uranium (92)	$1.0X10^{1}$	$2.7X10^{-10}$	$1.0X10^{5}$	$2.7X10^{-6}$
U-230 (medium lung absorption) (e)		$1.0X10^{1}$	$2.7X10^{-10}$	$1.0X10^{4}$	$2.7X10^{-7}$
U-230 (slow lung absorption) (f)		$1.0X10^{1}$	$2.7X10^{-10}$	$1.0X10^{4}$	$2.7X10^{-7}$
U-232 (fast lung absorption) (b),(d)		1.0	$2.7X10^{-11}$	$1.0X10^{3}$	$2.7X10^{-8}$
U-232 (medium lung absorption) (e)		$1.0X10^{1}$	$2.7X10^{-10}$	$1.0X10^{4}$	$2.7X10^{-7}$
U-232 (slow lung absorption) (f)		$1.0X10^{1}$	$2.7X10^{-10}$	$1.0X10^{4}$	$2.7X10^{-7}$
U-233 (fast lung absorption) (d)		$1.0X10^{1}$	$2.7X10^{-10}$	$1.0X10^{4}$	$2.7X10^{-7}$
U-233 (medium lung absorption) (e)		$1.0X10^{2}$	$2.7X10^{-9}$	$1.0X10^{5}$	$2.7X10^{-6}$
U-233 (slow lung absorption) (f)		$1.0X10^{1}$	$2.7X10^{-10}$	$1.0X10^{5}$	$2.7X10^{-6}$
U-234 (fast lung absorption) (d)		$1.0X10^{1}$	$2.7X10^{-10}$	$1.0X10^{4}$	$2.7X10^{-7}$
U-234 (medium lung absorption) (e)		$1.0X10^{2}$	$2.7X10^{-9}$	$1.0X10^{5}$	$2.7X10^{-6}$
U-234 (slow lung absorption) (f)		$1.0X10^{1}$	$2.7X10^{-10}$	$1.0X10^{5}$	$2.7X10^{-6}$
U-235 (all lung absorption types) (b),(d),(e),(f)		$1.0X10^{1}$	$2.7X10^{-10}$	$1.0X10^{4}$	$2.7X10^{-7}$
U-236 (fast lung absorption) (d)		$1.0X10^{1}$	$2.7X10^{-10}$	$1.0X10^{4}$	$2.7X10^{-7}$
U-236 (medium lung absorption) (e)		$1.0X10^{2}$	$2.7X10^{-9}$	$1.0X10^{5}$	$2.7X10^{-6}$
U-236 (slow lung absorption) (f)		$1.0X10^{1}$	$2.7X10^{-10}$	$1.0X10^{4}$	$2.7X10^{-7}$
U-238 (all lung absorption types) (b),(d),(e),(f)		$1.0X10^{1}$	$2.7X10^{-10}$	$1.0X10^{4}$	$2.7X10^{-7}$
U (natural) (b)		1.0	$2.7X10^{-11}$	$1.0X10^{3}$	$2.7X10^{-8}$
U (enriched to 20% or less) (g)		1.0	$2.7X10^{-11}$	$1.0X10^{3}$	$2.7X10^{-8}$
U (dep)		1.0	$2.7X10^{-11}$	$1.0X10^{3}$	$2.7X10^{-8}$
V-48	Vanadium (23)	$1.0X10^{1}$	$2.7X10^{-10}$	$1.0X10^{5}$	$2.7X10^{-6}$

Symbol of radionuclide	Element and atomic number	Activity concentration for exempt material (Bq/g)	Activity concentration for exempt material (Ci/g)	Activity limit for exempt consignment (Bq)	Activity limit for exempt consignment (Ci)
V-49		$1.0X10^{4}$	$2.7X10^{-7}$	$1.0X10^{7}$	$2.7X10^{-4}$
W-178	Tungsten (74)	$1.0X10^{1}$	$2.7X10^{-10}$	$1.0X10^{6}$	$2.7X10^{-5}$
W-181		$1.0X10^{3}$	$2.7X10^{-8}$	$1.0X10^{7}$	$2.7X10^{-4}$
W-185		$1.0X10^{4}$	$2.7X10^{-7}$	$1.0X10^{7}$	$2.7X10^{-4}$
W-187		$1.0X10^{2}$	$2.7X10^{-9}$	$1.0X10^{6}$	$2.7X10^{-5}$
W-188		$1.0X10^{2}$	$2.7X10^{-9}$	$1.0X10^{5}$	$2.7X10^{-6}$
Xe-122	Xenon (54)	$1.0X10^{2}$	$2.7X10^{-9}$	$1.0X10^{9}$	$2.7X10^{-2}$
Xe-123		$1.0X10^{2}$	$2.7X10^{-9}$	$1.0X10^{9}$	$2.7X10^{-2}$
Xe-127		$1.0X10^{3}$	$2.7X10^{-8}$	$1.0X10^{5}$	$2.7X10^{-6}$
Xe-131m		$1.0X10^{4}$	$2.7X10^{-7}$	$1.0X10^{4}$	$2.7X10^{-7}$
Xe-133		$1.0X10^{3}$	$2.7X10^{-8}$	$1.0X10^{4}$	$2.7X10^{-7}$
Xe-135		$1.0X10^{3}$	$2.7X10^{-8}$	$1.0X10^{10}$	$2.7X10^{-1}$
Y-87	Yttrium (39)	$1.0X10^{1}$	$2.7X10^{-10}$	$1.0X10^{6}$	$2.7X10^{-5}$
Y-88		$1.0X10^{1}$	$2.7X10^{-10}$	$1.0X10^{6}$	$2.7X10^{-5}$
Y-90		$1.0X10^{3}$	$2.7X10^{-8}$	$1.0X10^{5}$	$2.7X10^{-6}$
Y-91		$1.0X10^{3}$	$2.7X10^{-8}$	$1.0X10^{6}$	$2.7X10^{-5}$
Y-91m		$1.0X10^{2}$	$2.7X10^{-9}$	$1.0X10^{6}$	$2.7X10^{-5}$
Y-92		$1.0X10^{2}$	$2.7X10^{-9}$	$1.0X10^{5}$	$2.7X10^{-6}$
Y-93		$1.0X10^{2}$	$2.7X10^{-9}$	$1.0X10^{5}$	$2.7X10^{-6}$
Yb-169	Ytterbium (70)	$1.0X10^{2}$	$2.7X10^{-9}$	$1.0X10^{7}$	$2.7X10^{-4}$
Yb-175		$1.0X10^{3}$	$2.7X10^{-8}$	$1.0X10^{7}$	$2.7X10^{-4}$
Zn-65	Zinc (30)	$1.0X10^{1}$	$2.7X10^{-10}$	$1.0X10^{6}$	$2.7X10^{-5}$
Zn-69		$1.0X10^{4}$	$2.7X10^{-7}$	$1.0X10^{6}$	$2.7X10^{-5}$
Zn-69m		$1.0X10^{2}$	$2.7X10^{-9}$	$1.0X10^{6}$	$2.7X10^{-5}$
Zr-88	Zirconium (40)	$1.0X10^{2}$	$2.7X10^{-9}$	$1.0X10^{6}$	$2.7X10^{-5}$
Zr-93 (b)		$1.0X10^{3}$	$2.7X10^{-8}$	$1.0X10^{7}$	$2.7X10^{-4}$
Zr-95		$1.0X10^{1}$	$2.7X10^{-10}$	$1.0X10^{6}$	$2.7X10^{-5}$
Zr-97 (b)		$1.0X10^{1}$	$2.7X10^{-10}$	$1.0X10^{5}$	$2.7X10^{-6}$

[a] [Reserved]
[b] Parent nuclides and their progeny included in secular equilibrium are listed in the following:

Sr-90	Y-90
Zr-93	Nb-93m
Zr-97	Nb-97
Ru-106	Rh-106
Cs-137	Ba-137m
Ce-134	La-134

Ce-144	Pr-144
Ba-140	La-140
Bi-212	Tl-208 (0.36), Po-212 (0.64)
Pb-210	Bi-210, Po-210
Pb-212	Bi-212, Tl-208 (0.36), Po-212 (0.64)
Rn-220	Po-216
Rn-222	Po-218, Pb-214, Bi-214, Po-214
Ra-223	Rn-219, Po-215, Pb-211, Bi-211, Tl-207
Ra-224	Rn-220, Po-216, Pb-212, Bi-212, Tl-208(0.36), Po-212 (0.64)
Ra-226	Rn-222, Po-218, Pb-214, Bi-214, Po-214, Pb-210, Bi-210, Po-210
Ra-228	Ac-228
Th-226	Ra-222, Rn-218, Po-214
Th-228	Ra-224, Rn-220, Po-216, Pb-212, Bi-212, Tl-208 (0.36), Po-212 (0.64)
Th-229	Ra-225, Ac-225, Fr-221, At-217, Bi-213, Po-213, Pb-209
Th-nat	Ra-228, Ac-228, Th-228, Ra-224, Rn-220, Po-216, Pb-212, Bi-212, Tl-208 (0.36), Po-212 (0.64)
Th-234	Pa-234m
U-230	Th-226, Ra-222, Rn-218, Po-214
U-232	Th-228, Ra-224, Rn-220, Po-216, Pb-212, Bi-212, Tl-208 (0.36), Po-212 (0.64)
U-235	Th-231
U-238	Th-234, Pa-234m
U-nat	Th-234, Pa-234m, U-234, Th-230, Ra-226, Rn-222, Po-218, Pb-214, Bi-214, Po-214, Pb-210, Bi-210, Po-210
U-240	Np-240m
Np-237	Pa-233
Am-242m	Am-242
Am-243	Np-239

[c] [Reserved]
[d] These values apply only to compounds of uranium that take the chemical form of UF_6, UO_2F_2 and $UO_2(NO_3)_2$ in both normal and accident conditions of transport.
[e] These values apply only to compounds of uranium that take the chemical form of UO_3, UF_4, UCl_4 and hexavalent compounds in both normal and accident conditions of transport.
[f] These values apply to all compounds of uranium other than those specified in notes (d) and (e) of this table.
[g] These values apply to unirradiated uranium only.

Authority O.C.G.A. Secs. 31-13-1 et seq., Ga. L. 1964, pp. 499, 507, 566-575, as amended (Georgia Radiation Control Act).
History. Original Rule entitled “Transportation of Radioactive Material” adopted. F. May 2, 1991; eff. May 22, 1991. **Amended:** F. Feb. 24, 1994; eff. Mar. 16, 1994. **Amended:** F. Oct. 4, 1994; eff. Oct. 24, 1994. **Amended:** F. Apr. 16, 1997; eff. May 6, 1997. **Amended:** F. Mar. 29, 2002; eff. Apr. 18, 2002. **Amended:** F. Oct. 17, 2008; eff. Nov. 6, 2008.

391-3-17-.07 Notices, Instructions, and Reports To Workers; Inspections. Amended.

(1) **Purpose and Scope.** This Rule, 391-3-17-.07, establishes requirements for notices, instructions, and reports by licensees to individuals engaged in activities under a license and options available to such individuals in connection with Department inspections of licensees to ascertain compliance with the provisions of the Act and Regulations, Orders, and licenses issued thereunder regarding radiological working conditions. The Regulations in this Rule apply to all persons who receive, possess, use, own, or transfer sources of radiation licensed by the Department pursuant to Rules 391-3-17-.02, .04, .05, .08, and .09.

(2) **Posting of Notices to Workers.**

(a) Each licensee shall post current copies of the following documents:

1. This Rule and Rule 391-3-17-.03 of this Chapter;

2. The license, license conditions and documents incorporated into the license by reference and amendments thereto;

3. The operating procedures applicable to activities under the license; and

4. Any notice of violation involving radiological working conditions, proposed imposition of civil penalty, or Order issued pursuant to this Chapter, and any response from the licensee.

(b) If posting of a document specified in (2)(a)1., 2., or 3. of this Rule is not practicable, the licensee may post a notice which describes the document and states where it may be examined.

(c) Department's form "Notice to Employees" shall be posted by each licensee.

(d) Department documents posted pursuant to (2)(a)4. of this Rule shall be posted within 5 working days after receipt of the documents from the Department; the licensee's response, if any, shall be posted within five working days after dispatch from the licensee. Such documents shall remain posted for a minimum of five working days or until action correcting the violation has been completed, whichever is later.

(e) Documents, notices, or forms posted pursuant to (2) of this Rule shall appear in a sufficient number of places to permit individuals engaged in work under the license to observe them on the way to or from any particular work location to which the document applies, shall be conspicuous and shall be replaced if defaced or altered.

(3) **Instructions to Workers.**

(a) All individuals who in the course of employment are likely to receive in a year an occupational dose in excess of 100 mrem (1 mSv) shall be:

1. Kept informed of the storage, transfer, or use of sources of radiation in the licensee's facility;

2. Instructed in the health protection problems associated with exposure to radiation or radioactive material to the individual and potential offspring, in precautions or procedures to minimize exposure, and in the purposes and functions of protective devices employed;

3. Instructed in, and instructed and required to observe, to the extent within the workers' control, the applicable provisions of this Chapter and the license for the protection of personnel from exposures to radiation or radioactive material;

4. Instructed of their responsibility to report promptly to the licensee any condition which may constitute, lead to, or cause a violation of the Act, this Chapter, and the license or unnecessary exposure to radiation or radioactive material;

5. Instructed in the appropriate response to warnings made in the event of any unusual occurrence or malfunction that may involve exposure to radiation or radioactive material; and

6. Advised as to the radiation exposure reports which workers shall be furnished pursuant to (4) of this Rule.

(b) In determining those individuals subject to the requirements of (3)(a) above, licensees must take into consideration assigned activities during normal and abnormal situations involving exposure to radiation or radioactive material which can reasonably be expected to occur during the life of the facility. The extent of these instructions shall be commensurate with potential radiological health protection problems present in the workplace.

(4) **Notifications and Reports to Individuals.**

(a) Radiation exposure data for an individual and the results of any measurements, analyses, and calculations of radioactive material deposited or retained in the body of an individual, when required by Rule 391-3-17-.03(8)(b) of this Chapter, shall be reported to the individual as specified in (4) of this Rule. The information reported shall include data and results obtained pursuant to this Chapter, Orders, or license conditions, as shown in records maintained by the licensee pursuant to this Chapter. Each notification and report shall:

1. Be in writing;

2. Include appropriate identifying data such as the name of the licensee, the name of the individual, and the individual's identification number, preferably social security number;

3. Include the individual's exposure information; and

4. Contain the following statement: "This report is furnished to you under the provisions of Rule 391-3-17-.07. You should preserve this report for further reference."

(b) Each licensee shall furnish to each worker annually a written report of the worker's dose as shown in records maintained by the licensee pursuant to Rule 391-3-17-.03(14)(g) of this Chapter. The licensee shall provide an annual report to each individual monitored under .03(8)(b) of the dose received in that monitoring year if:

1. The individual’s occupational dose exceeds 1 mSv (100 mrem) TEDE or 1 mSv (100 mrem) to any individual organ or tissue; or

2. The individual requests his or her annual dose report.

(c) Each licensee shall furnish a written report of a worker's exposure to sources of radiation at the request of the worker formerly engaged in activities controlled by the licensee. The report shall include the dose record for each year the worker was required to be monitored pursuant to Rule 391-3-17-.03(8)(b). Such report shall be furnished within 30 days from the date of the request, or within 30 days after the dose of the individual has been determined by the licensee, whichever is later. The report shall cover the period of time that the worker's activities involved exposure to sources of radiation and shall include the dates and locations of work under the license in which the worker participated during this period.

(d) When a licensee is required pursuant to Rule 391-3-17-.03(15)(b), (c), and (d) of this Chapter to report to the Department any exposure of an individual to radiation or radioactive material, the licensee shall also provide the individual a report on his or her exposure data included in the report to the Department. Such reports shall be transmitted at a time not later than the transmittal to the Department.

(e) At the request of a worker who is terminating employment with the licensee in work involving exposure to radiation or radioactive material, during the current year, each licensee shall provide at termination to each such worker, or to the worker's designee, a written report regarding the radiation dose received by that worker from operations of the licensee during the current year or fraction thereof. If the most recent individual monitoring results are not available at that time, a written estimate of the dose shall be provided together with a clear indication that this is an estimate.

(5) **Presence of Representatives of Licensees and Workers During Inspection.**

(a) Each licensee shall afford to the Department at all reasonable times opportunity to inspect materials, activities, facilities, premises, and records pursuant to this Chapter.

(b) During an inspection, Department inspectors may consult privately with workers as specified in (6) of this Rule. The licensee may accompany Department inspectors during other phases of an inspection.

(c) If, at the time of inspection, an individual has been authorized by the workers to represent them during Department inspections, the licensee shall notify the inspectors of such authorization and shall give the workers' representative an opportunity to accompany the inspectors during the inspection of physical working conditions.

(d) Each workers' representative shall be routinely engaged in work under control of the licensee and shall have received instructions as specified in (3) of this Rule.

(e) Different representatives of the licensee and workers may accompany the inspectors during different phases of an inspection if there is no resulting interference with the conduct of the inspection. However, only one workers' representative at a time may accompany the inspectors.

(f) With the approval of the licensee and the workers' representative, an individual who is not routinely engaged in work under control of the licensee, for example, a consultant to the licensee or to the workers' representative, shall be afforded the opportunity to accompany Department inspectors during the inspection of physical working conditions.

(g) Notwithstanding the other provisions of (5) of this Rule, Department inspectors are authorized to refuse to permit accompaniment by any individual who deliberately interferes with a fair and orderly inspection. With regard to areas containing information classified by an agency of the U.S. Government in the interest of national security, an individual who accompanies an inspector may have access to such information only if authorized to do so. With regard to any area containing proprietary information, the workers' representative for that area shall be an individual previously authorized by the licensee to enter that area.

(6) **Consultation with Workers During Inspections.**

(a) Department inspectors may consult privately with workers concerning matters of occupational radiation protection and other matters related to applicable provisions of this Chapter and the license to the extent the inspectors deem necessary for the conduct of an effective and thorough inspection.

(b) During the course of an inspection, any worker may bring privately to the attention of the inspectors, either orally or in writing, any past or present condition which the worker has reason to believe may have contributed to or caused any violation of the Act, this Chapter, or license conditions, or any unnecessary exposure of an individual to sources of radiation under the licensee's control. Any such notice in writing shall comply with the requirements of (7)(a) of this Rule.

(c) The provisions of (6)(b) of this Rule shall not be interpreted as authorization to disregard instructions pursuant to (3) of this Rule.

(7) **Requests by Workers for Inspections**

(a) Any worker or representative of workers believing that a violation of the Act, this Chapter, or license conditions exists or has occurred in work under a license with regard to radiological working conditions in which the worker is engaged may request an inspection by giving notice of the alleged violation to the Department's Radioactive Materials Program. Any such notice shall be in writing, shall set forth the specific grounds for the notice, and shall be signed by the worker or representative of the workers. A copy shall be provided to the licensee by the Department no later than at the time of inspection except that, upon the request of the worker giving such notice, such worker's name and the name of individuals referred to therein shall not appear in such copy or on any record published, released, or made available by the Department, except for good cause shown.

(b) If, upon receipt of such notice, the Department determines that the complaint meets the requirements set forth in (7)(a) of this Rule, and that there are reasonable grounds to believe that the alleged violation exists or has occurred, an inspection shall be made as soon as practicable to determine if such alleged violation exists or has occurred. Inspections pursuant to (7) of this Rule need not be limited to matters referred to in the complaint.

(c) No licensee or contractor or subcontractor of a licensee shall discharge or in any manner discriminate against any worker because such worker has filed any complaint or instituted or caused to be instituted any proceeding under this Chapter or has testified or is about to testify in any such proceeding or because of the exercise by such worker on behalf of such worker or others of any option afforded by this Rule.

(8) **Inspections Not Warranted; Informal Review**

(a) If the Department's Radioactive Materials Program determines, with respect to a complaint under (7) of this Rule, that an inspection is not warranted because there are no reasonable grounds to believe that a violation exists or has occurred, the Radioactive Materials Program shall notify the complainant in writing of such determination. Such determination shall be without prejudice to the filing of a new complaint meeting the requirements of (7)(a) of this Rule. The complainant may obtain review of such determination by submitting a written statement of position with the Director of the Environmental Protection Division. The Department will provide the licensee with a copy of such statement by certified mail, excluding, at the request of the complainant, the name of the complainant. The licensee may submit an opposing written statement of position to the Director of the Environmental Protection Division who will provide the complainant with a copy of such statement by certified mail.

(b) Upon the request of the complainant, the Director of the Environmental Protection Division may hold an informal conference in which the complainant and the licensee may orally present their views. An informal conference may also be held at the request of the licensee, but disclosure of the identity of the complainant will be made only following receipt of written authorization from the complainant. After considering all written and oral views presented, the Director of the Environmental Protection Division shall affirm, modify, or reverse the determination of the Manager of Radioactive Materials Program, and furnish the complainant and the licensee a written notification of the decision and the reason for it.

Authority: O.C.G.A. §§ 31-13-1 et seq. **History.** Original Rule entitled “Notices, Instructions and Reports to Workers Inspections” adopted. F. May 2, 1991; eff. May 22, 1991. **Amended:** F. Feb. 24, 1994; eff. Mar. 16, 1994. **Amended:** F. Oct 4, 1994; eff. Oct. 24, 1994. **Amended:** F. Apr. 16, 1997; eff. May 6, 1997. **Amended:** F. Mar. 29, 2002; eff. Apr. 18, 2002. **Amended:** F. Jan. 8, 2014; eff. Jan. 28, 2014.

391-3-17-.08 Regulation and Licensing of Naturally-Occurring Radioactive Materials (Norm).

(1) **Purpose.** This Rule, 391-3-17-.08, establishes radiation protection standards for the possession, use, transfer, and disposal of naturally-occurring radioactive materials (NORM) not subject to regulation under the Atomic Energy Act of 1954, as amended. All numbered and lettered references within this Rule refer to parts of this Rule, unless stated otherwise.

(2) **Scope.**

(a) This Rule applies to any person who engages in the extraction, mining, storage, beneficiating, processing, use, transfer, or disposal of NORM in such a manner as to alter the chemical properties or physical state of the NORM or its potential exposure pathways to humans.

(b) This Rule addresses the introduction of NORM into products in which neither the NORM nor the radiation emitted from the NORM is considered to be beneficial to the products. The manufacture and distribution of products containing NORM in which the NORM and/or its associated radiation(s) is considered to be a beneficial attribute are licensed under the provisions of Rule .02 of this Chapter.

(c) This Rule also addresses waste management and disposal standards.

(3) **Definitions.** As used in this Rule, the following definitions apply:

(a) "Beneficial attribute" or "Beneficial to the product" means that the radioactivity of the product is necessary to the use of the product.

(b) "Beneficiating" means the processing of materials for the purpose of altering the chemical or physical properties to improve the quality, purity, or assay grade.

(c) "General environment" means the total terrestrial, atmospheric, and aquatic environments outside sites within which any activity, operation, or process authorized by a general or specific license issued under this Rule is performed.

(d) "Naturally-occurring radioactive material" (NORM) means any nuclide which is radioactive in its natural physical state (i.e., not man-made), but does not include byproduct, source, or special nuclear material.

(e) "Product" means something produced, made, manufactured, refined, or beneficiated.

(f) "Recycling" means a process by which materials that have served their intended use are collected, separated, or processed and returned to use in the form of raw materials in the production of new products. Recycling shall not include the use of a material in a manner that constitutes disposal in accordance with Rule .03(12).

(g) "Technologically-enhanced" means the chemical properties or physical state of natural sources of radiation have been altered or the potential exposure pathways of natural sources of radiation to humans have been altered.

(h) "Working Level" (WL) means any combination of short-lived radon decay products in one

liter of air that will result in the ultimate emission of alpha particles with a total energy of 130 billion electron volts (2.1 x 10^{-8}J).

(4) **Exemptions.**

(a) Persons who receive, possess, use, process, store, transfer, commercially distribute, or dispose of NORM are exempt from the requirements of this Chapter if the materials contain or are contaminated by concentrations of:

1. Either:

(i) 30 picocuries (1.11 Bq) per gram or less of technologically- enhanced radium-226 or radium-228 in soil, averaged over any 100 square meters and averaged over the first 15 centimeters of soil below the surface, provided that the radon emanation rate is less than 20 pCi (.74 Bq) per square meter per second, or

(ii) 30 pCi (1.11 Bq) per gram or less of technologically- enhanced radium-226 or radium-228 in media other than soil, provided that the radon emanation rate is less than 20 pCi (.74 Bq) per square meter per second;

2. Either:

(i) 5 pCi (.185 Bq) per gram or less of technologically- enhanced radium-226 or radium-228 in soil, averaged over any 100 square meters and averaged over the first 15 centimeters of soil below the surface, in which the radon emanation rate is equal to or greater than 20 pCi (.74 Bq) per square meter per second, or

(ii) 5 pCi (.185 Bq) per gram or less of technologically- enhanced radium-226 or radium-228 in media other than soil, in which the radon emanation rate is equal to or greater than 20 pCi (.74 Bq) per square meter per second; or

3. Either:

(i) 150 pCi (5.55 Bq) or less per gram of any other NORM radionuclide in soil, averaged over any 100 square meters and averaged over the first 15 centimeters of soil below the surface, provided that these concentrations are not exceeded at any time, or

(ii) 150 pCi (5.55 Bq) or less per gram of any other NORM radionuclide in media other than soil, provided that these concentrations are not exceeded at any time.

(b) Persons who receive products or materials containing NORM distributed in accordance with a specific license issued by the Department pursuant to (12)(c) or an equivalent license issued by another Licensing State are exempt from this Chapter.

(c) The manufacturing, commercial distribution, use, and disposal of the following products/materials are exempt from the requirements of this Chapter:

1. Potassium and potassium compounds which have not been isotopically enriched in the radionuclide K-40;

2. Brazil nuts; and

3. Byproducts from fossil fuel combustion (bottom ash, fly ash, and flue-gas emission control byproducts);

4. Materials used for building and highway construction, industrial processes, sand blasting, metal casings, or other material containing NORM, in which the radionuclide content has not been concentrated to levels higher than found in its natural state.

(d) The wholesale and retail distribution (including custom blending), possession, and use of the following products/materials are exempt from the requirements of this Chapter:

1. Phosphate and potash fertilizer;

2. Phosphogypsum for agricultural uses; and

3. Materials used for building and highway construction, industrial processes, sand blasting, metal casings, or other material containing NORM, in which the radionuclide content has not been concentrated to levels higher than found in its natural state.

(e) The possession, storage, transportation, commercial distribution, and use of natural gas and natural gas products and crude oil and crude oil products as a fuel are exempt from the requirements of this Chapter. The distribution of natural gas and crude oil and the manufacturing and distribution of natural gas and crude oil products are exempt from the specific license requirements of this Rule but are subject to the general license requirements in (7), (8), and (9).

(f) Materials in the recycling process, including scale or residue not otherwise exempted, and other equipment containing NORM are exempt from the requirements of this Rule if the maximum radiation exposure level does not exceed 50 microroentgens per hour including the background radiation level at any accessible point.

(g) Possession of produced waters from crude oil and natural gas production is exempt from the requirements of this Rule if the produced waters are reinjected in a well approved by the Department or if the produced waters are discharged under the authority of the Department.

(5) **Radiation Survey Instruments.**

(a) Radiation survey instruments used to determine exemptions pursuant to (4)(f) and radiation survey instruments used to make surveys in accordance with (7) shall be able to measure from 1 microroentgen per hour through at least 500 microroentgens per hour.

(b) Radiation survey instruments used to make surveys required by this Rule shall be calibrated, appropriate, and operable.

(c) Each radiation survey instrument shall be calibrated:

1. By a person licensed by the Department, another Agreement State or Licensing State, or by the U.S. Nuclear Regulatory Commission to perform such service;

2. At energies appropriate for the licensee's use;

3 At intervals not to exceed 12 months, and after each instrument servicing other than battery replacement; and

4. To demonstrate an accuracy within plus or minus 20 percent using a reference source provided by a person authorized pursuant to (5)(c)1.

(d) Records of these calibrations shall be maintained for Department inspection for 5 years after the calibration date.

(6) **Effective Date.** The provisions and requirements of this Rule shall take effect upon March 26, 1994, and shall apply to all facilities or sites owned or controlled by a person on that date. Products distributed and disposals made prior to that date are not subject to the provisions of this Rule.

(7) **General License.**

(a) A general license is hereby issued to mine, extract, receive, possess, own, use, store, transfer, process, and dispose of NORM not exempted in (4) without regard to quantity. This general license does not authorize the manufacturing or commercial distribution of products containing NORM in concentrations greater than those specified in (4) nor the disposal of wastes from other persons.

(b) Facilities and equipment contaminated with NORM in excess of the levels set forth in the Appendix of this Rule shall not be released for unrestricted use. The decontamination of equipment and facilities shall be performed only by persons specifically licensed by the Department or another Licensing State to conduct such work. Each general licensee shall establish written procedures for the evaluation (or screening) of equipment, components, and facilities prior to release for unrestricted use to ensure that the levels in this Appendix are not exceeded.

(c) No person shall transfer land for unrestricted use where the concentration of radium-226 or radium-228 in soil averaged over any 100 square meters exceeds the background level by more than:

1. 5 pCi/g (185 Bq/kg), averaged over the first 15 cm of soil below the surface; and

2. 15 pCi/g (555 Bq/kg), averaged over 15 cm thick layers of soil more than 15 cm below the surface.

(d) The handling or processing by a general licensee of NORM-contaminated materials not otherwise exempted from these Rules for the purpose of recycling is authorized by the Department if the radiation level 18 inches from the NORM-contaminated material does not exceed 2 millirem per hour.

(e) Equipment contaminated with NORM in excess of the levels set forth in the Appendix of this Rule may be released for maintenance and/or overhaul provided the recipient is specifically licensed to perform the activity on contaminated equipment.

(f) The decontamination of equipment, facilities, and land, as described in (10)(b), shall only be performed by persons specifically licensed by the Department or another Licensing State to

conduct such work.

(g) Transfer of NORM

1. The transfer of NORM not exempt from this Chapter from one general licensee to another general licensee may be authorized by the Department if:

(i) The equipment and facilities contaminated with NORM are to be used by the recipient for the same purpose or at the same time,

(ii) The transfer of control or ownership of land contaminated with NORM includes an annotation in the deed records to indicate the presence of NORM,

(iii) The materials being transferred are ores or raw materials for processing or refinement, or

(iv) The material being transferred is in the recycling process.

2. Transfers made under (7)(g)1. do not relieve the general licensee who makes the transfer from the responsibilities of assessing the extent of NORM contamination or material present, evaluating the hazards of the NORM, informing the general licensee receiving the NORM of these assessments and evaluations, and maintaining records required by this Chapter.

(8) **Protection of Workers and the General Population During Operations.** Each person subject to a general license in (7) or to a specific license shall conduct operations in compliance with the standards for radiation protection set forth in Rules .03 and .07 of this Chapter, except for disposal, which shall be governed by (9).

(9) **Disposal and Transfer of Waste for Disposal.**

(a) Each person subject to the general license in (7) or a specific license shall manage and ispose of wastes containing NORM:

1. In accordance with the applicable requirements of the U.S. Environmental Protection Agency for disposal of such wastes;

2. In a manner equivalent to the requirements for uranium and thorium byproduct materials in 40 CFR 192;

3. By transfer of the wastes for disposal to a land disposal facility licensed by the U.S. Nuclear Regulatory Commission, an Agreement State, or a Licensing State; or

4. In accordance with alternate methods authorized by the Department upon application or upon the Department's initiative.

(b) Records of disposal, including manifests, shall be maintained pursuant to the provisions of Rule .03 of this Chapter.

(c) Transfers of waste containing NORM for disposal shall be made only to a person specifically authorized to receive such waste.

(10) **Specific Licenses.**

(a) Unless otherwise exempted under the provisions of (4) or licensed under the provisions of Rule .02 of this Chapter, the manufacturing and commercial distribution of any material or product containing NORM shall be specifically licensed pursuant to the requirements of this Rule or pursuant to equivalent regulations of another Licensing State.

(b) Persons conducting the following activities involving equipment or facilities contaminated with NORM in excess of the levels set forth in the Appendix of this Rule or land contaminated in excess of the limits set forth in (7)(c) shall be specifically licensed pursuant to the requirements of this Rule:

1. Decontamination of equipment, facilities, and land; or

2. Disposal or storage of the resulting waste.

(11) **Filing Application for Specific Licenses.**

(a) Applications for specific licenses shall be filed in a manner and on a form prescribed by the Department.

(b) The Department may at any time after the filing of the original application, and before the expiration of the license, require further statements in order to enable the Department to determine whether the application should be granted or denied or whether a license should be modified or revoked.

(c) Each application shall be signed by the applicant or licensee or a person duly authorized to act for and on behalf of the licensee.

(d) An application for a specific license may include a request for a license authorizing one or more activities.

(e) In an application, the applicant may incorporate by reference information contained in previous applications, statements, or reports filed with the Department provided such references are clear and specific by page and paragraph.

(f) Applications and documents submitted to the Department may be made available for public inspection pursuant to the open records act, O.C.G.A. Section 50-18-70, et seq., except that the Department may withhold any document or part thereof from public inspection if disclosure of its contents is not required by law.

(12) **Requirements for the Issuance of Specific Licenses.**

(a) An application for a specific license will be approved if the Department determines that:

1. The applicant is qualified by reason of training and experience to use the NORM in question for the purpose requested in accordance with these Rules in such a manner as to minimize danger to public health and safety, the environment, or property;

2. The applicant's proposed equipment, facilities, and procedures are adequate to minimize danger to public health and safety, the environment, and property;

3. The issuance of the license will not be inimical to the health and safety of the public;

4. The applicant satisfied any applicable special requirement in this Rule;

5. The applicant has met the financial surety requirements of (21); and

6. The applicant has appointed a qualified Radiation Safety Officer (RSO). The applicant, through the RSO, shall ensure that Radiation Safety activities are being performed in accordance with approved procedures and regulatory requirements in the daily operation of the applicant's program.

(i) The Radiation Safety Officer shall:

(I) Investigate overexposures, accidents, spills, losses, thefts, unauthorized receipts, uses, transfers, and disposals, and other deviations from approved radiation safety practices. The RSO shall have the authority to assume control and implement corrective actions, including shut down of operations when emergency or unsafe conditions exist.

(II) Have a thorough knowledge of the licensee's management policies and administrative procedures.

(III) Implement policies and procedures for:

I. Keeping an inventory record of radioactive material;

II. Using radioactive material safely and in accordance with the ALARA philosophy;

III. Taking emergency action if control of radioactive material is lost;

IV. Performing periodic radiation surveys;

V. Performing checks and calibrations of survey instruments and other safety equipment;

VI. Disposing of radioactive material;

VII. Training personnel who work in or frequent areas where radioactive material is used or stored; and

VIII. Keeping a copy of all records and reports required by the Regulations, a copy of this Chapter, a copy of each licensing request, the license and its amendments, and the written policy and procedures required by the Regulations.

(ii) The RSO's qualifications shall be submitted to the Department and shall include:

(I) Possession of a high school diploma or a certificate of high school equivalency based on the GED test;

II) Completion of the training and testing requirements of the activities for which the license

application is submitted; and

(III) Training and experience necessary to supervise the Radiation Safety aspects of the licensed activity.

(b) An application for a specific license to decontaminate equipment, land, or facilities contaminated with NORM in excess of the levels set forth in (4), (7)(c), or the Appendix of this Rule, as applicable, and to dispose of the resulting waste will be approved if:

1. The applicant satisfies the general requirements specified in (12)(a); and

2. The applicant has adequately addressed the following items in the application:

(i) Procedures and equipment for monitoring and protection of workers;

(ii) An evaluation of the radiation levels and concentrations of contamination expected during normal operations;

(iii) Operating and emergency procedures, including procedures for waste reduction and quality assurance of items released for unrestricted use; and

(iv) Method of disposing of the NORM removed from contaminated equipment, facilities, and/or land.

(c) An application for a specific license to manufacture and/or distribute products or materials containing NORM to persons exempted from this Chapter pursuant to (4)(b) will be approved if:

1. The applicant satisfied the general requirements specified in (12)(a);

2. The NORM is not contained in any food, beverage, cosmetic, drug, or other commodity designed for ingestion or inhalation by, or application to, a human being without approval by the U.S. Food and Drug Administration; and

3. The applicant submits sufficient information relating to the design, manufacture, prototype testing, quality control procedures, labeling or marking, and conditions of handling, storage, use, and disposal of the NORM material or product to demonstrate that the material or product will meet the safety criteria set forth in (13). The information shall include:

(i) A description of the material or product and its intended use or uses;

(ii) The type, quantity, and concentration of NORM in each material or product;

(iii) The chemical and physical form of the NORM in the material or product, and changes in chemical and physical form that may occur during the useful life of the material or product;

(iv) An analysis of the solubility in water and body fluids of the NORM in the material or product;

(v) The details of manufacture and design of the material or Rule product relating to containment and shielding of the NORM and other safety features under normal and severe conditions of handling, storage, use, reuse, and disposal of the material or product;

(vi) The type and degree of access of human beings to the material or product during normal handling, use, and disposal;

(vii) The total quantity of NORM expected to be distributed annually in the material or product;

(viii) The expected useful life of the material or product;

(ix) The proposed method of labeling or marking each unit of the material or product with identification of the manufacturer and/or initial transferor of the product and the radionuclide(s) and quantity of NORM in the material or product;

(x) The procedures for prototype testing of the material or product to demonstrate the effectiveness of the containment, shielding, and other safety features under both normal and severe conditions of handling, storage, use, reuse, and disposal;

(xi) The results of the prototype testing of the material or product, including any change in the form of the NORM contained in it, the extent to which the NORM may be released to the environment, any change in radiation levels, and any other changes in safety features;

(xii) The estimated external radiation doses and dose commitments relevant to the safety criteria in (13) and the basis for such estimates;

(xiii) A determination that the probabilities with respect to doses referred to in (13) meet the safety criteria;

(xiv) The quality control procedures to be followed in the production of production lots of the material or product, and the quality control standards the material or product will be required to meet; and

(xv) Any additional information, including experimental studies and tests, required by the Department to facilitate a determination of the radiation safety of the material or product.

(d) Notwithstanding the provisions of (13)(b), the Department may deny an application for a specific license if the end uses of the product are frivolous or cannot be reasonably foreseen.

(13) **Safety Criteria for Specific Licenses.**

An applicant for a specific license under (12)(c) shall demonstrate that the product is designed and will be manufactured so that:

(a) In normal use, handling, storage, and disposal, the dose to any individual likely to be exposed to radiation from the material or product will not exceed the limits set forth in Rule .03 of this Chapter.

(b) In normal use, disposal, handling, and storage, it is unlikely that the radon released from the material or product will result in an increase in the average radon concentration in air of more than 0.4 picocurie (.0148 Bq) per liter.

(c) It is unlikely that there will be a significant reduction in the effectiveness of the containment,

shielding, or other safety features of the material or product from wear and abuse likely to occur in normal handling and use of the material or product during its useful life.

(14) **Issuance of Specific Licenses.**

(a) Upon a determination that an application meets the requirements of the Act and Rules of the Department, the Department will issue a specific license authorizing the proposed activity in such form and containing such conditions and limitations as it deems appropriate or necessary.

(b) The Department may incorporate in any license at the time of issuance, or thereafter by amendment, such additional requirements and conditions with respect to the licensee's receipt, possession, use, and transfer of NORM subject to this Rule as it deems appropriate or necessary in order to:

1. Minimize danger to public health and safety, to property, and to the environment;

2. Require such reports, require the keeping of such records, and to provide for such inspections of activities under the license as may be appropriate or necessary; and

3. Prevent loss or theft of NORM subject to this Rule.

(15) **Conditions of Specific Licenses Issued Under (12).**

(a) General Terms and Conditions

1. Each license issued pursuant to this Rule shall be subject to all the provisions of the Act, now or hereafter in effect, and to all Rules, Regulations, and Orders of the Director.

2. No license issued or granted under this Rule and no right to possess or utilize NORM granted by any license issued pursuant to this Rule shall be transferred, assigned, or in any manner disposed of, either voluntarily or involuntarily, directly or indirectly, through transfer of control of any license to any person unless the Department shall, after securing full information, find that the transfer is in accordance with the provisions of the Act, and shall give its consent in writing.

3. Each person licensed by the Department pursuant to this Rule shall confine use and possession of the NORM licensed to the locations and purposes authorized in the license.

4. Each person licensed by the Department pursuant to this Rule is subject to the license provisions of (8) and (9).

5. Notification

(i) Each licensee shall notify the Department in writing, immediately following the filing of a voluntary or involuntary petition for bankruptcy under the Chapters of Title 11 (Bankruptcy) of the United States Code (11 U.S.C.) by or against:

(I) A licensee;

(II) An entity [as that term is defined in 11 U.S.C. 101 (14)] controlling a licensee or listing the license or licensee as property of the estate; or

(III) An affiliate [as that term is defined in 11 U.S.C. 101 (2)] of the licensee.

(ii) This notification must indicate:

(I) The bankruptcy court in which the petition for bankruptcy was filed; and

(II) The date of the filing of the petition.

(b) Quality Control, Labeling, and Reports of Transfer. Each person listed under (12)(c) shall:

1. Carry out adequate control procedures in the manufacture of the material or product to assure that each production lot meets the quality control standards approved by the Department;

2. Label or mark each unit so that the manufacturer, processor, producer, or initial transferor of the material or product and the NORM in the material or product can be identified; and

3. Maintain records identifying, by name and address, each person to whom NORM is transferred for use under (4)(b) or the equivalent regulations of another Licensing State, and stating the kinds, quantities, and uses of the NORM transferred. An annual summary report stating the total quantity of each radionuclide transferred under the specific license shall be filed with the Department. Each report shall cover the year ending December 31, and shall be filed within 30 days thereafter. If no transfers of NORM have been made pursuant to (13)(c) during the reporting period, the report shall so indicate.

(16) **Expiration and Termination of Specific Licenses.**

(a) Except as provided in (17)(b) and (16)(d)6., each specific license shall expire at the end of the specified day in the month and year stated therein.

(b) Each licensee shall notify the Department immediately, in writing, and request termination of the license when the licensee decides to terminate all activities involving NORM authorized under the specific license or when the licensee decides to terminate a licensed location. This notification and request for termination of the license must include the reports and information specified in (16)(d)4. The licensee is subject to the provisions of (16)(d) and (16)(e), as applicable.

(c) No less than 30 days before the expiration date specified in a specific license, the licensee shall either:

1. Submit an application for license renewal under (17), or

2. Notify the Department in writing, under (16)(b), if the licensee decides to discontinue all activities involving NORM.

(d) If the licensee terminates a licensed location, or if a licensee does not submit an application for license renewal under (17), the licensee shall on or before the expiration date specified in the specific license:

1. Terminate use of NORM;

2. Remove NORM contamination to the extent practicable;

3. Properly dispose of the NORM; and

4. Submit a report of the disposal of NORM and radiation survey(s) to confirm the absence of NORM or to establish the levels of residual NORM contamination. The licensee shall, as appropriate:

(i) Report levels of radiation in units of microrads (µGy) per hour of beta and gamma radiation at one centimeter and gamma radiation at one meter from surfaces and report levels of radioactivity in units of disintegrations per minute (or microcuries or becquerels) per 100 square centimeters removable and fixed on surfaces, microcuries (becquerels) per milliliter in water, and picocuries per gram (Bq/kg) in contaminated solids such as soils or concrete; and

(ii) Specify the instrument(s) used and certify that each instrument is properly calibrated and tested.

5. If no radioactivity attributable to activities conducted under the license is detected, the licensee shall submit a certification that no detectable NORM contamination was found. If the Department determines that the information submitted under (16)(d)2. and (16)(d)4. is adequate and surveys confirm the findings, the Department will notify the licensee in writing that the license is terminated.

6. If detectable levels of residual NORM attributable to activities conducted under the license are found, the specific license continues in effect beyond the expiration date, if necessary, with respect to possession of residual NORM until the Department notifies the licensee in writing that the license is terminated. During this time, the licensee is subject to the provisions of (16)(e). In addition to the information submitted under (16)(d)4., the licensee shall submit a plan, if appropriate, for decontaminating the location(s) and disposing of the residual NORM.

(e) Each licensee who possesses residual NORM under (16)(d)6., following the expiration date specified in the specific license, shall:

1. Be limited to actions involving NORM related to preparing the location(s) for release for unrestricted use; and

2. Continue to control entry to restricted areas until the location(s) is (are) suitable for release for unrestricted use and the Department notifies the licensee in writing that the license is terminated.

(17) **Renewal of Specific Licenses.**

(a) Applications for renewal of specific licenses shall be filed in accordance with (11).

(b) In any case in which a licensee, not less than 30 days prior to the expiration of an existing specific license, has filed an application in proper form for renewal or for a new specific license authorizing the same activities, such existing license shall not expire until final action by the Department.

(18) **Amendment of Specific Licenses at Request of Licensee.** Applications for amendment of a license shall be filed in accordance with (11) and shall specify the respects in which the licensee desires the license to be amended and the grounds for such amendment.

(19) **Department Action on Applications to Renew and Amend Specific Licenses.** In considering an application by a licensee to renew or amend the specific license, the Department will apply the criteria set forth in (12).

(20) **Reciprocal Recognition of Licenses.**

Subject to this Chapter, any person who holds a specific license from a Licensing State, and issued by the agency having jurisdiction where the licensee maintains an office for directing the licensed activity and at which radiation safety records are normally maintained, is hereby granted a general license to conduct the activities authorized in such licensing document within this State for a period not in excess of 180 days in any calendar year provided that:

(a) The licensing document does not limit the activity authorized by such document to specified installations or locations;

(b) The out-of-state licensee notifies the Department in writing at least 3 days prior to engaging in such activity. Such notification shall indicate the location, period, and type of proposed possession and use within the State, and shall be accompanied by a copy of the pertinent licensing document. If, for a specific case, the 3-day period would impose an undue hardship on the out-of-state licensee, the licensee may, upon application to the Department, obtain permission to proceed sooner. The Department may waive the requirement for filing additional written notifications during the remainder of the calendar year following the receipt of the initial notification from a person engaging in activities under the general license provided in (20)(a);

(c) The out-of-state licensee complies with all applicable Regulations of the Department and with all the terms and conditions of the licensing document, except any such terms and conditions which may be inconsistent with applicable Regulations of the Department;

(d) The out-of-state licensee supplies such other information as the Department may request; and

(e) The out-of-state licensee shall not transfer or dispose of NORM possessed or used under the general license provided in (20)(a) except by transfer to a person:

1. Specifically licensed by the Department or by another Licensing State to receive such NORM; or

2. Exempt from the requirements for a license for such NORM under (4).

(21) **Financial Surety Arrangements for Specific Licenses.**

(a) Each licensee or applicant for a specific license under (12) shall post with the Department financial surety, or security, according to the requirements of Rule .02(8)(g), of this Chapter to ensure the protection of the public health and safety, property, and the environment in the event of abandonment, default, or other inability or unwillingness of the licensee to meet the requirements of the Act and this Chapter. Financial surety arrangements shall:

1. Consist of surety bonds, cash deposits, certificates of deposit, government securities,

irrevocable letters or lines of credit, or any combination of these.

2. Be in an amount sufficient to meet the applicant's or licensee's obligations under the Act and this Chapter and shall be based upon Department-approved cost estimates.

3. Be established prior to issuance of the specific license or the commencement of operations to assure that sufficient funds will be available to carry out the decontamination and decommissioning of the facility.

4. Be continuous for the duration of the license and for a period coincident with the applicant/licensee's responsibility under the Act and this Chapter.

5. Be available in Georgia subject to judicial process and execution in the event required for the purposes set forth.

6. Be established within 90 days of April 1, 1994, for licenses in effect on that date.

(b) No later than 90 days after the licensee notifies the Department that decontamination and decommissioning have been completed, the Department shall determine if these have been conducted in accordance with this Chapter and the conditions of the specific license. If the Department finds that the requirements have been met, the Director of the Radioactive Materials Program shall direct the return or release of the licensee's security in full plus any accumulated interest. If the Department finds that the requirements have not been met, the Department will notify the licensee in writing of the steps necessary for compliance.

(22) **Modification and Revocation of Licenses.**

(a) The terms and conditions of all licenses shall be subject to amendment, revision, or modification or the license may be suspended or revoked by reason of amendments to the Act, by reason of rules or Regulations promulgated by the Board, and Orders issued by the Director.

(b) Any license may be revoked, suspended, or modified, in whole or in part, for any material false statement in the application or any material false statement of fact required under provisions of the Act or this Chapter, or because of conditions revealed by such application or statement of fact or any report, record, or inspection or other means which would warrant the Department to refuse to grant a license on an original application, or for violation of, or failure to observe, any of the terms and conditions of the Act, of the license, or of any Rule, Regulation, or Order of the Director.

(c) Except in cases of willfulness or those in which the public health, interest, or safety requires otherwise, no license shall be modified, suspended, or revoked unless, prior to the institution of proceedings therefor, facts or conduct which may warrant such action shall have been called to the attention of the licensee in writing and the licensee shall have been accorded an opportunity to demonstrate or achieve compliance with all lawful requirements.

APPENDIX

ACCEPTABLE SURFACE CONTAMINATION LEVELS FOR NORM

NUCLIDE[a]	AVERAGE[bcf]	MAXIMUM[bdf]	REMOVABLE[bcef]
U-nat, U-235, and associated products (including Po-210), except Ra-226, Th-230, Ac-227, and Pa-231	5,000 dpm alpha/100 cm^2	15,000 dpm alpha/100 cm^2	11,000 dpm alpha/ 100 cm^2
Transuranics, Ra-226, Ra-228, Th-230, Th-228 Pa-231, Ac-227	100 dpm/100 cm^2	300 dpm/100 cm^2	20 dpm/100 cm^2
Beta-/gamma-emitters (nuclides with decay modes other than alpha emission or spontaneous fission, including Pb-210), except others noted above.	5,000 dpm beta, gamma/100 cm^2	15,000 dpm beta, gamma/100 cm^2	1,000 dpm beta, gamma/100 cm^2

[a] Surfaces contaminated with alpha- and beta-emitting naturally-occurring radionuclides may be surveyed with a detector that responds to both types of radiation. The same method may be employed when evaluating wipe samples for removable contamination.

[b] As used in this table, dpm (disintegrations per minute) means the rate of emission by naturally-occurring radioactive material as determined by correcting the counts per minute observed by an appropriate detector for background, efficiency, and geometric factors associated with the instrumentation using a ratemeter or scaler and detector appropriate for the type and energy of emissions being monitored. The detector shall be capable of responding to alpha, beta, and/or gamma radiation.

[c] Measurements of average contamination level should not be averaged over more than one square meter. For objects of less surface area, the average should be derived for each object.

[d] The maximum contamination level applies to an area of not more than 100 cm^2 .

[e] The amount of removable radioactive material per 100 cm^2 of surface area should be determined by wiping that area with dry filter or soft absorbent paper, applying moderate pressure, and assessing the amount of radioactive material on the wipe with an appropriate instrument of known efficiency. When removable contamination on objects of less surface area is determined, the pertinent levels should be reduced proportionally and the entire surface should be wiped.

[f] All surveys and efficiency determinations shall be made with the detector's active surface no greater than 1 centimeter from the surface being surveyed, wipe being analyzed, or source being used. A scaler must be used when evaluating wipe samples and count times must be sufficient to detect 10 percent of the applicable limit with 95 percent confidence that the activity would be

detected.

[g] Notwithstanding the levels in the table above, equipment containing NORM shall not exceed a maximum radiation exposure level of 50 microroentgens per hour, including the background radiation level at any accessible point.

Authority O.C.G.A Sec. 31-13-1 et seq. **History.** Original Rule entitled "Administratoin" adopted. F. May 2, 1991; eff. May 22, 1991. **Repealed:** New Rule entitled "Regulation and Licensing of Naturally-Occuring Radioactive Materials (NORM)" adopted. F. Feb. 24, 1994; eff. Mar. 16, 1994. **Amended:** F. Oct. 4, 1994; eff. Oct. 24, 1994. **Amended:** F. Mar. 29, 2002; eff. Apr. 18, 2002.

391-3-17-.09 Licensing and Radiation Safety Requirements for Irradiators.

(1) **Purpose and scope.**

(a) This Rule, 391-3-17-.09, contains requirements for the issuance of a license authorizing the use of sealed sources containing radioactive materials in irradiators used to irradiate objects or materials using gamma radiation. This Rule also contains radiation safety requirements for operating irradiators. The requirements of this Rule are in addition to other requirements of this Chapter. In particular, the provisions of Rules 391-3-17-.02, .03, and .07 apply to applications and licenses subject to this Rule. Nothing in this Rule relieves the licensee from complying with other applicable Federal, State, and local regulations governing the siting, zoning, land use, and building code requirements for industrial facilities.

(b) The Regulations in this Rule apply to panoramic irradiators that have either dry or wet storage of the radioactive sealed sources and to underwater irradiators in which both the source and the product being irradiated are under water. Irradiators whose dose rates exceed 500 rads (5 Grays) per hour at one meter from the radioactive sealed sources in air or in water, as applicable for the irradiator type, are covered by this Rule.

(c) This Rule does not apply to self-contained dry-source-storage irradiators (those in which both the source and the areas subject to irradiation are contained within a device and are not accessible by personnel), medical radiology or teletherapy, radiography (the irradiation of materials for nondestructive testing purposes), gauging, or open-field (agricultural) irradiations.

(d) Any sealed source licensed pursuant to this Rule shall have a solubility equal to or less than the solubility of cobalt-60 metal in water.

(2) **Definitions.**

(a) "Annually" means once every 12 calendar months or no later than the last day of the same calendar month of the following year.

(b) "Doubly encapsulated sealed source" means a sealed source in which the radioactive material is sealed within a capsule and that capsule is sealed within another capsule.

(c) "Irradiator" means a facility that uses radioactive sealed sources for the irradiation of objects or materials.

(d) "Irradiator operator" means an individual who has successfully completed the training and testing described in (5)(a) of this Rule and is authorized by the terms of the license to operate the irradiator without a supervisor present.

(e) "Large irradiator" means an irradiator where radiation dose rates exceeding 500 rads (5 Grays) per hour exist at one meter from the sealed radioactive sources in air or in water, as applicable for the irradiator type, but does not include irradiators in which both the sealed source and the area subject to irradiation are contained within a device and are not accessible to personnel.

(f) "Panoramic dry-source-storage irradiator" means an irradiator in which the irradiations occur in air in areas potentially accessible to personnel and in which the sources are stored in shields made of solid materials. The term includes beam-type dry-source-storage irradiators in which only a narrow beam of radiation is produced for performing irradiations.

(g) "Panoramic irradiator" means an irradiator in which the irradiations are done in air in areas potentially accessible to personnel. The term includes beam-type irradiators.

(h) "Panoramic wet-source-storage irradiator" means an irradiator in which the irradiations occur in air in areas potentially accessible to personnel and in which the sources are stored under water in a storage pool.

(i) "Pool irradiator" means any irradiator at which the sources are stored or used in a pool of water including panoramic wet-sourcestorage irradiators and underwater irradiators.

(j) "Product conveyor system" means a system for moving the product to be irradiated to, from, and within the area where irradiation takes place.

(k) "Radiation room" means a shielded room in which irradiations take place. Underwater irradiators do not have radiation rooms.

(l) "Radiation Safety Officer" means an individual with responsibility for the overall Radiation Safety Program at the facility.

(m) "Sealed source" means any byproduct material that is used as a source of radiation and is encased in a capsule designed to prevent leakage or escape of the byproduct material.

(n) "Seismic area" means any area where the probability of a horizontal acceleration in rock of more than 0.3 times the acceleration of gravity in 250 years is greater than ten percent, as designated by the U.S. Geological Survey.

(o) "Solubility of one liquid or solid in another" means the mass of a substance contained in the solution which is in equilibrium with an excess of the substance.

(p) "Underwater irradiator" means an irradiator in which the sources always remain shielded under water and humans do not have access to the sealed sources or the space subject to irradiation without entering the pool.

(3) **Specific Licensing Requirements.**

(a) Application for a specific license.

1. A person, as defined in Rule 391-3-17-.01 may file an application for a specific license authorizing the use of sealed sources in large irradiators in accordance with Rule .02 of this Chapter.

2. A separate license is required for each large irradiator, radiation room, or underwater irradiator.

(b) Specific licenses for large irradiators. The Department will approve an application for a specific license for the use of licensed material in an irradiator if the applicant meets the requirements contained in this section.

1. The applicant shall satisfy the general requirements specified in

Rule 391-3-17-.02 and the requirements contained in this Rule.

2. The applicant shall describe its training for irradiator operators that shall include, at a minimum, the following:

(i) A minimum of 40 hours of classroom training;

(ii) A minimum of 160 hours of on-the-job training;

(iii) Safety reviews;

(iv) The means the applicant will use to test each operator's understanding of and ability to comply with the Department's Regulations and licensing requirements and the irradiator operating and emergency procedures; and

(v) Minimum training and experience of personnel who may provide training.

3. The applicant shall submit an outline or summary of the written operating and emergency procedures listed in this Rule that describes the radiation safety aspects of the procedures.

4. The application shall describe the organizational structure for managing the irradiator, specifically the radiation safety responsibilities or authorities. In particular, the application must specify who, within the management structure, has the authority to stop unsafe operations. The applicant shall also describe the training and experience required for the position of Radiation Safety Officer.

5. The application must include a description of the access control system required by (4)(b) of this Rule, the radiation monitors required by (4)(e) of this Rule, the method of detecting leaking sources required by (5)(e) of this Rule including the sensitivity of the method, and a diagram of the facility that shows the locations of all required interlocks and radiation monitors.

6. The applicant shall provide assurance that any radioactive source not used in the irradiation process shall be removed from the irradiator pool and disposed of or returned to the manufacturer.

7. If the applicant intends to perform leak testing of dry-sourcestorage sealed sources, the applicant shall establish procedures for leak testing and submit a description of these procedures to the Department for approval. The procedures must include the following:

(i) Instruments to be used;

(ii) Methods of performing the analysis; and

(iii) Pertinent experience of the individual who analyzes the samples.

8. If licensee personnel are to load or unload sources, the applicant shall describe the qualifications and training of the personnel and the procedures to be used. If the applicant intends to contract for source loading or unloading at his facility, the loading or unloading must

be done by an organization specifically licensed by the Department, an Agreement State, or the U.S. Nuclear Regulatory Commission to load or unload irradiator sources.

9. The applicant shall perform the following operational tests to ensure proper functioning of all equipment and safety devices before the irradiator is loaded with sources:

(i) Interlock and radiation safety systems;

(ii) Pool integrity and plumbing;

(iii) Source rack mechanical positioning system;

(iv) Source rack movement and position sensing systems;

(v) Source rack electrical control system;

(vi) Uninterruptible electrical power supply for radiation monitoring warning systems;

(vii) Fire protection system;

(viii) Emergency systems for returning a stuck source rack into the pool;

(ix) Systems used for transferring sources to and from transport vehicles; and

(x) Product conveyor system.

10. The applicant shall describe the operational inspection and maintenance program, including the frequency of the checks required by (5)(f) of this Rule.

11. The roof plug opening or removable shielding providing access for the loading and removal of sources shall be large enough to accommodate the largest applicable transportation cask.

(c) The applicant shall not begin construction of a new irradiator facility prior to the issuance of a license by the Department. As used in this section, the term "construction" includes the construction of any portion of the permanent irradiator structure on the site but does not include: engineering and design work, purchase of site, site surveys or soil testing, site preparation, site excavation, and other similar tasks. Any activities undertaken prior to the issuance of license with respect to the requirements of this Chapter shall be at the risk of the applicant and have no bearing on the issuance of a license in accordance with this Chapter.

(d) Applications for exemptions.

1. The Department may, upon application of any interested person or upon its own initiative, grant any exemptions from the requirements in this Rule that it determines are authorized by law and will not endanger public health, safety, or property.

2. Any application for a license or for an amendment of a license authorizing use of a teletherapy-type unit for irradiation of materials or objects may include proposed alternatives for the requirements of this Rule. The Department will approve the proposed alternatives if the

applicant provides adequate rationale for the proposed alternatives and demonstrates that they are likely to provide an adequate level of safety for workers and the public.

(e) Request for written statements.

1. After the filing of the original application, the Department may request further information necessary to enable the Department to determine whether the application should be granted or denied.

2. Each license is issued with the condition that the licensee will, at any time before expiration of the license, upon the Department's request, submit written statements or other sufficient information to enable the Department to determine whether the license should be modified, suspended, or revoked.

(4) **Design and Performance Requirements for Irradiators.**

(a) Performance criteria for sealed sources.

1. Requirements. Sealed sources installed after January 1, 1994:

(i) Must have a certificate of registration issued under 10 CFR 32.210;

(ii) Must be doubly incapsulated;

(iii) Must use radioactive material that is as nondispersible as practical and that is as insoluble as practical if the source is used in a wet-source-storage or wet-source-change irradiator;

(iv) Must be encapsulated in a material resistant to general corrosion and to localized corrosion, such as 316L stainless steel or other material with equivalent resistance if the sources are for use in irradiator pools; and

(v) In prototype testing of the sealed source, must have been leak tested and found leak-free after each of the following tests:

2. Temperature. The test source must be held at 40°C for 20 minutes, 600°C for 1 hour, and then be subjected to a thermal shock test with a temperature drop from 600°C to 20°C within 15 seconds.

3. Pressure. The test source must be twice subjected for at least 5 minutes to an external pressure (absolute) of 2 million newtons per square meter.

4. Impact. A 2-kilogram steel weight, 2.5 centimeters in diameter, must be dropped from height of 1 meter onto the test source.

5. Vibration. The test source must be subjected 3 times for 10 minutes each to vibrations sweeping from 25 hertz to 500 hertz with a peak amplitude of 5 times the acceleration of gravity. In addition, each test source must be vibrated for 30 minutes at each resonant frequency found.

6. Puncture. A 50-gram weight and pin, 0.3 centimeter pin diameter, must be dropped from a

height of 1 meter onto the test source.

7. Bend. If the length of the source is more than 15 times larger than the minimum cross-sectional dimension, the test source must be subjected to a force of 2000 newtons at its center equidistant from two support cylinders, the distance between which is 10 times the minimum cross-sectional dimension of the source.

(b) Access control.

1. Each entrance to a radiation room at a panoramic irradiator must have a door or other physical barrier to prevent inadvertent entry of personnel if the sources are not in the shielded position. Product conveyor systems may serve as barriers as long as they are reliable and consistently function as a barrier. It must not be possible to move the sources out of their shielded position if the door or barrier is open. Opening the door or barrier while the sources are exposed must cause the sources to return promptly to their shielded position. The personnel entrance door or barrier must have a lock that is operated by the same key used to move the sources. The doors and barriers must not prevent any individual in the radiation room from leaving.

2. Each entrance to a radiation room at a panoramic irradiator must have an independent backup access control to detect personnel entry while the sources are exposed. Detection of entry while the sources are exposed must cause the sources to return to their full shielded position and must also activate a visible and audible alarm to make the individual entering the room aware of the hazard. The alarm must also alert at least one other individual who is onsite of the entry. That individual shall be trained in how to respond to the alarm and prepared to promptly render or summon assistance.

3. A radiation monitor must be provided to detect the presence of high radiation levels in the radiation room of a panoramic irradiator before personnel entry. The monitor must be integrated with personnel access door locks to prevent room access when radiation levels are high. Attempted personnel entry while the monitor measures high radiation levels must activate the alarm described in (4)(b)2. of this Rule. The monitor may be located in the entrance (normally referred to as the maze) but not in the direct radiation beam.

4. Before the sources move from their shielded position in a panoramic irradiator, the source control must automatically activate con- spicuous visible and audible alarms to alert people in the radiation room that the sources will be moved from their shielded position. The alarms must give individuals enough time to leave the room before the sources leave the shielded position.

5. Each radiation room at a panoramic irradiator must have a clearly visible and readily accessible control that would allow an individual in the room to make the sources return to their fully shielded position.

6. Each radiation room of a panoramic irradiator must contain a control that prevents the sources from moving from the shielded position unless the control has been activated and the door or barrier to the radiation room has been closed with a present time after activation of the control.

7. Each entrance to the radiation room of a panoramic irradiator and each entrance to the area within the personnel access barrier of an underwater irradiator must have a sign bearing the

radiation symbol and the words, "Caution (or danger) radioactive material." Panoramic irradiators must also have a sign stating "Very High radiation area," but the sign may be removed, covered, or otherwise made inoperable when the sources are fully shielded.

8. If the radiation room of a panoramic irradiator has roof plugs or other movable shielding, it must not be possible to operate the irradiator unless the shielding is in its proper location. This requirement may be met by interlocks that prevent operation if the shield is not placed properly or by an operating procedure requiring inspection including documentation of inspection, of shielding before operation.

9. Panoramic irradiators shall not operate if the requirements in (4)(b) of this Rule are not met.

10. Underwater irradiators must have a personnel access barrier around the pool, which must be locked to prevent access when the irradiator is not attended. Only operators and facility management may have access to keys to the personnel access barrier. There must be an intrusion alarm to detect unauthorized entry when the personnel access barrier is locked. Activation of the intrusion alarm must alert an individual (not necessarily onsite) who is prepared to respond or summon assistance.

(c) Shielding.

1. The radiation dose rate in areas that are normally occupied during operation of a panoramic irradiator may not exceed 2 millirems (0.02 millisievert) per hour at any location 30 centimeters or more from the wall of the room when the sources are exposed. The dose rate must be averaged over an area not to exceed 100 square centimeters having no linear dimension greater than 20 cm. Areas where the radiation dose rate exceeds 2 millirems (0.02 millisievert) per hour must be locked, roped off, or posted and not entered without written approval or in the physical presence of the Radiation Safety Officer.

2. The radiation dose at 30 centimeters over the edge of the pool of a pool irradiator may not exceed 2 millirems (0.02 millisievert) per hour when the sources are in the fully shielded position.

3. The radiation dose rate at 1 meter from the shield of a drysource- storage panoramic irradiator when the source is shielded may not exceed 2 millirems (0.02 millisievert) per hour and at 5 centimeters from the shield must not exceed 20 millirems (0.02 millisievert) per hour.

(d) Fire protection.

1. The radiation room at a panoramic irradiator must have heat and smoke detectors. The detectors must activate an audible alarm. The alarm must be capable of alerting a person who is prepared to summon assistance promptly. The sources must automatically become fully shielded if a fire is detected.

2. The radiation room at a panoramic irradiator must be equipped with a fire extinguishing system capable of extinguishing a fire without the entry of personnel into the room. The system for the radiation room must have a shut-off valve to control flooding into unrestricted areas.

(e) Radiation monitors.

1. Irradiators with automatic product conveyor systems must have a radiation monitor with an audible alarm located to detect loose radioactive sources that are carried toward the product exit. If the monitor detects a source, an alarm must sound and product conveyors must stop automatically. The alarm must be capable of alerting an individual in the facility who is prepared to summon assistance. Underwater irradiators in which the product moves within an enclosed stationary tube are exempt from the requirements of this paragraph.

2. For pool irradiators, the licensee shall provide a means to detect radioactive contamination in pool water each day the irradiator operates. The means may be either an on-line radiation monitor on the pool water purification system or an analysis of pool water. If the licensee uses an on-line radiation monitor, the detection of above normal background radiation levels must activate the alarm. The alarm set-point must be set as low as practical, but high enough to avoid false alarms. If a false alarm due to background radiation occurs, the alarm set-point must be increased. Activation of the alarm must automatically cause the water purification system to shut off. However, the licensee may reset the alarm set-point to a higher level if necessary to operate the pool purification system to clean up contamination in the pool as specifically provided in written emergency procedures.

3. Underwater irradiators that are not in a shielded radiation room must have a radiation monitor over the pool to detect abnormal radiation levels. The monitor must have an audible alarm and a visible indicator at entrances to the personnel access barrier around the pool. The audible alarm may have a manual shut-off. The alarm must be capable of alerting an individual who is prepared to respond promptly.

(f) Control of source movement.

1. The mechanism that moves the sources of a panoramic irradiator must require a key to actuate. Actuation of the mechanism must cause an audible signal to indicate that the sources are leaving the shielded position. Only one key may be in use at any time, and only operators or facility management may possess it. The key must be attached to a portable radiation survey meter by a chain or cable. The lock for source control must be designed so that the key may not be removed if the sources are in an unshielded position. The door to the radiation room must require the same key.

2. The console of a panoramic irradiator must have a source position indicator that indicates when the sources are in the fully shielded position, when they are in transit, and when the sources are exposed.

3. The control console of a panoramic irradiator must have an emergency control that promptly returns the sources to the shielded position.

4. Each control for a panoramic irradiator must be clearly marked as to its function.

(g) Irradiator pools.

1. For licenses initially issued after January 1, 1994, irradiator pools must either:

(i) Have a water-tight stainless steel liner or a liner metallurgically compatible with other components in the pool; or

(ii) Be constructed so that there is a low likelihood of substantial leakage and have a surface designed to facilitate decontamination. In either case, the licensee shall have a method to safely store the sources during repairs of the pool.

2. For licenses initially issued after January 1, 1994, irradiator pools must have no outlets more than 0.5 meter below the normal low water level that could allow water to drain out of the pool. Pipes that have intakes more than 0.5 meter below the normal low water level and that could act as siphons must have siphon breakers to prevent the siphoning of pool water.

3. A means must be provided to replenish water losses from the pool.

4. A visible indicator must be provided in a clearly visible location to indicate the pool water level is below the normal low water level or above the normal high water level.

5. Irradiator pools must be equipped with a purification system designed to be capable of maintaining the water during normal operation at a conductivity of 20 micromhos per centimeter or less and with a clarity so that the sources can be seen clearly.

6. A physical barrier, such as a railing or cover, must be used around or over irradiator pools during normal operation to prevent personnel from accidentally falling into the pool. The barrier may be removed during maintenance, inspection, and service operations.

7. If long-handled tools or poles are used in irradiator pools, the radiation dose rate on the handling areas of the tools may not exceed 2 millirems (0.02 millisievert) per hour.

(h) Source rack protection.

If the product to be irradiated moves on a product conveyor system, the source rack and the mechanism that moves the rack must be protected by a barrier or guides to prevent products and product carriers from hitting or touching the rack or mechanism.

(i) Power failures.

1. If electrical power at a panoramic irradiator is lost for longer than 10 seconds, the sources must automatically return to the shielded position.

2. The lock on the door of the radiation room of a panoramic irradiator shall not be deactivated by a power failure.

3. During a power failure, the area of any irradiator where sources are located may be entered only when using an operable and calibrated radiation survey meter.

(j) Design requirements.

Irradiators whose construction begins after January 1, 1994, must meet the design requirements of this section.

1. Shielding. For panoramic irradiators, the licensee shall design shielding walls to meet generally accepted building code requirements for reinforced concrete and design the walls, wall penetrations, and entranceways to meet the radiation shielding requirements of (4)(c) of

this Rule. If the irradiator will use more than 5 million Curies (1.85 x 1017 becquerels) of activity, the licensee shall evaluate the effects of heating of the shielding walls by the irradiator sources.

2. Foundations. For panoramic irradiators, the licensee shall design the foundation, with consideration given to soil characteristics, to ensure that it is adequate to support the weight of the facility shield walls.

3. Pool integrity. For pool irradiators, the licensee shall design the pool to assure that it is leak resistant, that it is strong enough to bear the weight of the pool water and shipping casks, that a dropped cask would not fall on sealed sources, that all outlets or pipes meet the requirements of (4)(c)2. of this Rule, and that metal components are metallurgically compatible with other components in the pool.

4. Water handling system. For pool irradiators, the licensee shall verify that the design of the water purification system is adequate to meet the requirements of (4)(g) of this Rule. The system must be designed so that water leading from the system does not drain to unrestricted areas without being monitored.

5. Radiation monitors. For all irradiators, the licensee shall evaluate the location and sensitivity of the monitor to detect sources carried by the product conveyor system as required by (4)(e)1. of this Rule. The licensee shall verify that the product conveyor is designed to stop before a source on the product conveyor would cause a radiation overexposure to any person. For pool irradiators, if the licensee uses radiation monitors to detect contamination under (5)(e)2. of this Rule, the licensee shall verify that the design of radiation monitoring systems to detect pool contamination includes sensitive detectors located close to where contamination is likely to concentrate.

6. Source rack. For pool irradiators, the licensee shall verify that there are no crevices on the source or between the source and source holder that would promote corrosion on a critical area of the source. For panoramic irradiators, the licensee shall determine that source rack drops due to loss of power will not damage the source rack and that source rack drops due to failure of cables (or alternate means of support) will not cause loss of integrity of sealed sources. For panoramic irradiators, the licensee shall review the design of the mechanism that moves the sources to assure that the likelihood of a stuck source is low and that, if the rack sticks, a means exists to free it with minimal risk to personnel.

7. Access control. For panoramic irradiators, the licensee shall verify from the design and logic diagram that the access control system will meet the requirements of (4)(b) of this Rule.

8. Fire protection. For panoramic irradiators, the licensee shall verify that the number, location, and spacing of the smoke and heat detectors are appropriate to detect fires and that the detectors are protected from mechanical and radiation damage. The licensee shall verify that the design of the fire extinguishing system provides the necessary discharge patterns, densities, and flow characteristics for complete coverage of the radiation room and that the system is protected from mechanical and radiation damage.

9. Source return. For panoramic irradiators, the licensee shall verify that the source rack will automatically return to the fully shielded position if offsite power is lost for more than 10 seconds.

10. Seismic. For panoramic irradiators to be built in seismic areas, the licensee shall design the reinforced concrete radiation shields to retain their integrity in the event of an earthquake by designing to the seismic requirements of an appropriate source such as American Concrete Institute Standard ACI 318-89, "Building Code Requirements for Reinforced Concrete," Chapter 21, "Special Provisions for Seismic Design," or local building codes, if current.

11. Wiring. For panoramic irradiators, the licensee shall verify that electrical wiring and electrical equipment in the radiation room are selected to minimize failures due to prolonged exposure to radiation.

12. Product carriers. For irradiators utilizing product carriers, the basic design of the carrier shall prevent the carrier from opening or coming into contact with the source rack or protective barrier. The basic design shall be submitted to the Department for approval.

13. Floor penetrations. All floor penetrations, including expansion joints, floor joints, and drains, shall not allow the uncontrolled release of water, which has not been analyzed for its radioactive content, from the radiation room.

14. Lift mechanisms. The lift mechanisms for the source rack and source transport cask must be designed for working and breaking strength to safely lift a source transport cask and sources into and out of the irradiator pool.

15. Ventilation. All radiation rooms in a panoramic irradiator shall be maintained under negative pressure. Any exhaust from radiation rooms shall be through a high-efficiency nuclear air cleaning system. This system shall consist of standard roughing and absolute (HEPA) filters that have been tested in line in accordance with and has met the requirements of ANSI N510.

(K) Construction monitoring and acceptance testing.

The requirements of (4)(k) of this Rule must be met for irradiators whose construction begins after January 1, 1994. Additionally, the requirements for shielding, (4)(k)1., foundations, (4)(k)2., pool integrity, (4)(k)3., and wiring, (4)(k)11. of this Rule must be certified by a registered professional engineer. The requirements must be met prior to loading sources.

1. Shielding. For panoramic irradiators, the licensee shall monitor the construction of the shielding to verify that its construction meets design specifications and generally accepted building code requirements for reinforced concrete.

2. Foundations. For panoramic irradiators, the licensee shall monitor the construction of the foundations to verify that their construction meets design specifications.

3. Pool integrity. For pool irradiators, the licensee shall verify that the pool meets design specifications and shall test the integrity of the pool. The licensee shall verify that outlets and pipes meet the requirements of (4)(f)2. of this Rule.

4. Water handling system. For pool irradiators, the licensee shall verify that the water purification system, the conductivity meter, and the water level indicators operate properly.

5. Radiation monitors. For all irradiators, the licensee shall verify the proper operation of the monitor to detect sources carried on the product conveyor system and the related alarms and interlocks required by (4)(e)1. of this Rule. For pool irradiators, the licensee shall verify the proper operation of the radiation monitors and the related alarm, if used, to meet (4)(e)2. of this Rule. For underwater irradiators, the licensee shall verify the proper operation of the over-the-pool monitor, alarms, and interlocks required by (4)(e)2. of this Rule.

6. Source racks. For panoramic irradiators, the licensee shall test the movement of the source racks for proper operation prior to source loading; testing must include source rack lowering due to simulated loss of power. For all irradiators with product conveyor systems, the licensee shall observe and test the operation of the conveyor system to assure that the requirements in (4)(h) of this Rule are met for protection of the source rack and the mechanism that moves the rack; testing must include tests of any limit switches and interlocks used to protect the source rack and mechanism that moves the rack from moving product carriers.

7. Access control. For panoramic irradiators, the licensee shall test the completed access control system to assure that it functions as designed and that all alarms, controls, and interlocks work properly.

8. Fire protection. For panoramic irradiators, the licensee shall test the ability of the heat and smoke detectors to detect a fire, to activate alarms, and to cause the source rack to automatically become fully shielded. The licensee shall test the operability of the fire extinguishing system.

9. Source return. For panoramic irradiators, the licensee shall demonstrate that the source racks can be returned to their fully shielded positions without offsite power.

10. Computer systems. For panoramic irradiators that use a computer system to control the access control system, the licensee shall verify that the access control system will operate properly if offsite power is lost and shall verify that the computer has security features that prevent an irradiator operator from commanding the computer to override the access control system when it is required to be operable.

11. Wiring. For panoramic irradiators, the licensee shall verify that the electrical wiring and electrical equipment that were installed meet the design specifications.

(5) **Operation of Irradiators.**

(a) Training.

1. Before an individual is permitted to operate an irradiator without a supervisor present, the individual must be instructed in the following:

(i) The fundamentals of radiation protection applied to irradiators (including the differences between external radiation and radioactive contamination, units of radiation dose, Department's dose limits, why large radiation doses must be avoided, how shielding and access controls prevent large doses, how an irradiator is designed to prevent contamination, the proper use of survey meters and personnel dosimeters, other radiation safety features of an irradiator, and the basic function of the irradiator);

(ii) The requirements of this Rule and Rule 391-3-17-.07 that are applicable to the irradiator;

(iii) The operation of the irradiator;

(iv) Those operating and emergency procedures listed in (5)(b) of this Rule that the individual is responsible for performing; and

(v) Case histories of accidents or problems involving irradiators.

2. Before an individual is permitted to operate an irradiator without a supervisor present, the individual shall pass a written test on the instruction received, consisting primarily of questions based on the licensee's operating and emergency procedures that the individual is responsible for performing and other operations necessary to safely operate the irradiator without supervision.

3. Before an individual is permitted to operate an irradiator without a supervisor present, the individual must have received on-the-job training or simulator training in the use of the irradiator as described in the license application. The individual shall also demonstrate the ability to perform those portions of the operating and emergency procedures that he or she is to perform.

4. The licensee shall conduct safety reviews for irradiator operators at least annually. The licensee shall give each operator a brief written test on the information. Each safety review must include, to the extent appropriate, each of the following:

(i) Changes in operating and emergency procedures since the last review, if any;

(ii) Changes in Regulations and license conditions since the last review, if any;

(iii) Reports on recent accidents, mistakes, or problems that have occurred at irradiators, if any;

(iv) Relevant results of inspections of operator safety performance;

(v) Relevant results of the facility's inspection and maintenance checks; and

(vi) A drill to practice an emergency or abnormal event procedure.

5. The licensee shall evaluate the safety performance of each irradiator operator at least annually to ensure that the Regulations, license conditions, and operating and emergency procedures are followed. The licensee shall discuss the results of the evaluation with the operator and shall instruct the operator on how to correct any mistakes or deficiencies observed.

6. Individuals who will be permitted unescorted access to the radiation room of the irradiator or the area around the pool of an underwater irradiator, but who have not received the training required for operators and the Radiation Safety Officer, shall be instructed and tested in any precautions they should take to avoid radiation exposure, and procedures or parts of procedures listed in (5)8. of this Rule that they are expected to perform or comply with, and their

proper response to alarms required in this Rule. Tests may be oral.

7. Individual who must be prepared to respond to alarms required by (4)(b)2., (4)(b)10., (4)(d)1., (4)(e)1., and (5)(e)2. of this Rule shall be trained and tested on how to respond. Each individual shall be retested at least once a year. Tests may be oral.

(b) Operating and emergency procedures.

1. The licensee shall have and follow written operating procedures for the following:

(i) Operation of the irradiator, including entering and leaving the radiation room;

(ii) Use of personnel dosimeters;

(iii) Surveying the shielding of panoramic irradiators;

(iv) Monitoring pool water for contamination while the water is in the pool and before release of pool water to unrestricted areas;

(v) Leak testing of sources;

(vi) Inspection and maintenance checks required by (5)(f) of this Rule;

(vii) Loading, unloading, and repositioning sources, if the operations will be performed by the licensee; and

(viii) Inspection of movable shielding required by (4)(b)8. of this Rule, if applicable.

2. The licensee shall have and follow emergency or abnormal event procedures, appropriate to the irradiator type, for the following:

(i) Source stuck in the unshielded position;

(ii) Personnel overexposures;

(iii) A radiation alarm from the product exit portal monitor or pool monitor;

(iv) Detection of leaking sources, pool contamination, or alarm cause by contamination of pool water;

(v) A low or high water level indicator, an abnormal water loss, or leakage from the source storage pool;

(vi) A prolonged loss of electrical power;

(vii) A fire alarm or explosion in the radiation room;

(viii) An alarm indicating unauthorized entry into the radiation room, area around the pool, or another alarm area;

(ix) Natural phenomena, including an earthquake, tornado, flooding, or other phenomena as appropriate for the geographical location of the facility; and

(x) The jamming of the automatic conveyor system.

3. The licensee may revise operating and emergency procedures without Department approval only if all of the following conditions are met:

(i) The revisions do not reduce the safety of the facility,

(ii) The revisions are consistent with the outline or summary of procedures submitted with the license application,

(iii) The revisions have been reviewed and approved by the Radiation Safety Officer, and

(iv) The users or operators are instructed and tested on the revised procedures before they are put into use.

(c) Personnel monitoring.

1. Irradiator operators shall wear a personnel monitoring device while operating a panoramic irradiator or while in the area around the pool of an underwater irradiator. The personnel monitoring device processor must be accredited by the National Voluntary Laboratory Accreditation Program for high energy photons in the normal and accident dose ranges. Each personnel monitoring device must be assigned to and worn only by one individual. Personnel monitoring devices must be processed at least quarterly.

2. Other individuals who enter the radiation room of a panoramic irradiator shall wear a dosimeter, which may be a pocket dosimeter. For groups of visitors, only two people who enter the radiation room are required to wear dosimeters. If pocket dosimeters are use to meet the requirements of this paragraph, a check of their response to radiation must be done at least annually. Acceptable dosimeters must read within plus or minus 30 percent of the true radiation dose.

(d) Radiation surveys.

1. A radiation survey of the area outside the shielding of the radiation room of a panoramic irradiator must be conducted with the sources in the exposed position before the facility starts to operate. A radiation survey of the area above the pool of pool irradiators must be conducted after the sources are loaded but before the facility starts to operate. Additional radiation surveys of the shielding must be performed at intervals not to exceed 3 years and before resuming operations after addition of new sources or any modification to the radiation room shielding or structure that might increase dose rate.

2. If the radiation levels specified in (4)(c) of this Rule are exceeded, the facility must be modified to comply with the requirements of (4)(c) of this Rule.

3. Portable radiation survey meters must be calibrated at least annually to an accuracy of ±20 percent of the gamma energy of the sources in use. The calibration must be done at two points

on each scale or, for digital instruments, at one point per decade over the range that will be used. Portable radiation survey meters must be of a type that does not saturate and read zero at high radiation dose rates.

4. Water from the irradiator pool, other potentially contaminated liquids, and sediments from pool vacuuming must be monitored for radioactive contamination before release to unrestricted areas. Radioactive concentrations must not exceed those specified in 10 CFR Part 20, Table 2, Column 2 or Table 3 of Appendix B, "Annual Limits on Intake (ALIs) and Derived Air Concentrations (DACs) of Radionuclides for Occupational Exposure; Effluent Concentrations; Concentrations for Release to Sewerage".

5. Before releasing resins for unrestricted use, they must be monitored before release in an area with a background level of less than 0.5 millirem (0.005 millisievert) per hour. The resins may be released only if the survey does not detect radiation levels above background radiation levels. The survey meter used must be capable of detecting radiation levels of 0.5 millirem (0.005 millisievert) per hour.

(e) Detection of leaking sources.

1. Each dry-source-storage sealed source must be tested for leakage at intervals not to exceed six months using a leak test kit or method approved by the Department, an Agreement State, or the U.S. Nuclear Regulatory Commission. In the absence of a certificate from a transferor that a test has been made within the six months before the transfer, the sealed source may not be used until tested. The test must be capable of detecting the presence of 0.005 microcurie (200 becquerels) of radioactive material and must be performed by a person approved by the Department, an Agreement State, or the U.S. Nuclear Regulatory Commission to perform the test.

2. For pool irradiators, sources may not be put into the pool unless the licensee tests the sources for leaks or has a certificate from a transferor that a leak test has been done within the six months before the transfer. Water from the pool must be checked for contamination each day the irradiator operates. The check may be done either by using a radiation monitor on a pool water circulating system or by analysis of a sample of pool water. If a check for contamination is done by analysis of a sample of pool water, the results of the analysis must be available within 24 hours. If the licensee uses a radiation monitor on a pool water circulating system, the detection of above normal radiation levels must activate an alarm. The alarm set-point must be set as low as practical, but high enough to avoid false alarms. The licensee may reset the alarm set-point to a higher level if necessary to operate the pool water purification system to clean up contamination in the pool if specifically provided for in written emergency procedures.

3. If a leaking source is detected, the licensee shall arrange to remove the leaking source from service and have it decontaminated, repaired, or disposed of by the Department, Agreement State, of U.S. Nuclear Regulatory Commission licensee that is authorized to perform these functions. The licensee shall promptly check its personnel, equipment, facilities, and irradiated product for radioactive contamination. No product may be shipped until the product has been checked and found free of contamination. If a product has been shipped that may have been inadvertently contaminated, the licensee shall arrange to locate and survey that product for contamination. If any personnel are found to be contaminated, decontamination must be performed promptly. If contaminated equipment, facilities, or products are found, the licensee

shall arrange to have them decontaminated or disposed of by a Department, U.S. Nuclear Regulatory Commission, or Agreement State licensee that is authorized to perform these functions. If a pool is contaminated, the licensee shall arrange to clean the pool until the contamination levels do not exceed the appropriate concentration in Table 2, Column 2, Appendix B to 20.1001 to 20.2401 of 10 CFR 20.

(f) Inspection and maintenance.

1. The licensee shall perform inspection and maintenance checks that include, as a minimum, each of the following at the frequency specified in the license or license application:

(i) Operability of each aspect of the access control system required by (4)(b) of this Rule.

(ii) Functioning of the source position indicator required by (4)(f) of this Rule.

(iii) Operability of the radiation monitor for radioactive contamination in pool water required by (5)(e)2. of this Rule using a radiation check source, if applicable.

(iv) Operability of the over-the-pool radiation monitor at underwater irradiators as required by (4)(e)3. of this Rule.

(v) Operability of the product exit monitor required by (4)(e)1. of this Rule.

(vi) Operability of the emergency source return control required by (4)(e)3. of this Rule.

(vii) Leak-tightness of systems through which pool water circulates (visual inspection).

(viii) Operability of the heat and smoke detectors and extinguisher system required by (4)(d) of this Rule (but without turning extinguishers on).

(ix) Operability of the means of pool water replenishment required by (4)(g)3. of this Rule.

(x) Operability of the indicators of high and low pool water levels required by (4)(g)4. of this Rule.

(xi) Operability of the intrusion alarm required by (4)(b)10. of this Rule, if applicable.

(xii) Functioning and wear of the system, mechanism, and cables used to raise and lower sources.

(xiii) Condition of the barrier to prevent products from hitting the sources or source mechanism as required by (4)(h) of this Rule.

(xiv) Amount of water added to the pool to determine if the pool is leaking.

(xv) Electrical wiring on required safety systems for radiation damage.

(xvi) Pool water conductivity measurements and analysis as required by (5)(g)2. of this Rule.

2. Malfunctions and defects found during inspection and maintenance checks must be repaired without undue delay.

(g) Pool water purity.

1. The pool water purification system must be run sufficiently to maintain the conductivity of the pool water below 20 micromhos per centimeter under normal circumstances. If pool water conductivity rises above 20 micromhos per centimeter, the licensee shall take prompt actions to lower the pool water conductivity, and shall take corrective actions to prevent future recurrences.

2. The licensee shall measure the pool water conductivity frequently enough, but not less than weekly, to assure that the conductivity remains below 20 micromhos per centimeter. Conductivity meters must be calibrated at least annually.

(h) Attendance during operation.

1. Both an irradiator operator and at least one other individual, who is trained on how to respond and prepared to promptly render or summon assistance if the access control alarm sounds, shall be present onsite:

(i) Whenever the irradiator is operated using an automatic product conveyor system; and

(ii) Whenever the product is moved into or out of the radiation room when the irradiator is operated in a batch mode.

2. At a panoramic irradiator at which static irradiations (no movement of the product) are occurring, a person who has received the training on how to respond to alarms described in (5)(a)7. of this Rule must be onsite.

3. At an underwater irradiator, an irradiator operator must be present at the facility whenever the product is moved into or out of the pool. Individuals who move the product into or out of the pool of an underwater irradiator need not be qualified as irradiator operators; however, they must have received the training described in (5)(a)6. and 7. of this Rule. Static irradiations may be performed without a person present at the facility.

4. Irradiator operators shall not be on duty more than 12 hours in any 24-hour period without at least 8 hours uninterrupted rest, unless an emergency exists and prior authorization has been given by the Department.

(i) Entering and leaving the radiation room.

1. Upon first entering the radiation room of a panoramic irradiator after an irradiation, the irradiator operator shall use a survey meter to determine that the source has returned to its fully shielded position. The operator shall check the functioning of the survey meter with a radiation check source while entering the radiation room. The survey meter must be of a type that does not saturate and read zero at high radiation dose rates.

2. Before exiting from and locking the door to the radiation room of a panoramic irradiator prior

to a planned irradiation, the irradiator operator shall:

(i) Visually inspect the entire radiation room to verify that no one else is in it; and

(ii) Activate a control in the radiation room that permits the sources to be moved from the shielded position only if the door to the radiation room is locked within a preset time after setting the control.

3. During a power failure, the area around the pool of an underwater irradiator may not be entered without using an operable and calibrated radiation survey meter unless the over-the-pool monitor required by (4)(e)3. of this Rule is operating with backup power.

(j) Irradiation of explosive or flammable materials.

1. Irradiation of explosive material is prohibited unless the licensee has received prior written authorization from the Department. Authorization will not be granted unless the licensee can demonstrate that detonation of the explosive would not rupture the sealed sources, injure personnel, damage safety systems, or cause radiation overexposures of personnel.

2. Irradiation of more than small quantities of flammable material (flash point below 140°F) is prohibited in panoramic irradiators unless the licensee has received prior written authorization from the Department. Authorization will not be granted unless the licensee can demonstrate that a fire in the radiation room could be controlled without damage to sealed sources or safety systems and without radiation overexposures of personnel.

(6) **Records.**

(a) Records and retention periods.

The licensee shall maintain the following records at the irradiator for the periods specified:

1. A copy of the license, license conditions, documents incorporated into a license by reference, and amendments thereto until superseded by new documents or until the Department terminates the license for documents not superseded.

2. Records of each individual's training, tests, and safety reviews provided to meet the requirements of (5)(a)1,. 2., 3., 4., 5., and 7. of this Rule for 3 years after the evaluation.

3. Records of the annual evaluations of the safety performance of irradiator operators required by (5)(a)5. of this Rule for 3 years after the evaluation.

4. A copy of the current operating and emergency procedures required by (5)(b) of this Rule until superseded or the Department terminates the license. Records of the Radiation Safety Officer's review and approval of changes in procedures as required by (5)(b)3.iii of this Rule are to be retained for 3 years from the date of the change.

5. Personnel monitoring results required by (5)(c) of this Rule shall be retained until the Department terminates each pertinent license requiring the record. Upon termination of the license, the licensee shall permanently store records on Department Form, "Occupational Radiation Exposure History", or equivalent, or shall make provisions with the Department for

transfer to the Department.

6. Records of radiation surveys required by (5)(d) of this Rule for three years from the date of the survey.

7. Records of radiation survey meter calibrations required by (5)(d) of this Rule and pool water conductivity meter calibrations required by (5)(g)2. of this Rule until three years from the date of calibration.

8. Records of the results of leak tests required by (5)(e)1. of this Rule and the results of contamination checks required by (5)(e)2. of this Rule for three years from the date of each test.

9. Records of inspection and maintenance checks required by (5)(f) of this Rule for three years.

10. Records of major malfunctions, significant defects, operating difficulties or irregularities, and major operating problems that involve required radiation safety equipment for three years after repairs are completed.

11. Records of the receipt, transfer, and disposal of all licensed sealed sources for three years after the transfer or disposal of the sealed source.

12. Records of the design checks required by (4)(j) of this Rule and the construction control checks as required by (4)(k) of this Rule until the license in terminated. The records must be signed and dated. The title or qualification of the person signing must be included.

13. Records related to decommissioning of the irradiator as required by Rule 391-3-17-.02(8)(g)7.

(b) Reports.

1. In addition to the reporting requirements in other Rules of this Chapter, the licensee shall report the following events if not reported under other Rules of this Chapter:

(i) Source stuck in an unshielded position.

(ii) Any fire or explosion in a radiation room.

(iii) Damage to the source racks.

(iv) Failure of the cable or drive mechanism used to move the source racks.

(v) Inoperability of the access control system.

(vi) Detection of a radiation source by the product exit monitor.

(vii) Detection of radioactive contamination attributable to licensed radioactive material.

(viii) Structural damage to the pool liner or walls.

(ix) Abnormal water loss or leakage from the source storage pool.

(x) Pool water conductivity exceeding 100 micromhos (100 µS) per centimeter.

2. The report must include a telephone report within 24 hours and a written report within 30 days as described in Rule 391-3-17-.03(14)(b).

Authority O.C.G.A. Sec. 31-13-1 et seq. **History.** Original Rule entitled " Enforcement" adopted. F. May 2, 1991; eff. May 22, 1991. **Repealed:** New Rule entitled " Licensing and Radiation Safety Requirements for Irradiators" adopted F. Feb. 24,1994; eff. Mar. 16, 1994. **Amended:** F. Oct 4, 1994; eff. Oct. 24, 1994. **Amended:** F. Mar. 29, 2002; eff. Apr. 18, 2002.

391-3-17-.10 Administration. Amended

(1) Scope. The provisions of this Rule, 391-3-17-.10, shall apply to the administrative procedures required by this Chapter.

(2) Administration.

(a) Administrative Examination of Applications. Applications for the issuance of a license, amendment of a license at the request of the holder, and renewal of a license will be given a docket or other identifying number for administrative examination. The applicant may be required to submit additional information and may be requested to confer informally regarding the application. The Department will give to others such notice of the filing of applications as is required under the applicable provisions of this Chapter and such additional notices as it deems appropriate.

(b) Effect of Timely Renewal Application. In the case of an application for renewal, if the licensee has made application for the renewal of an existing license at least 30 days prior to its expiration date, the license shall not be deemed to have expired until such application shall have been determined.

(c) Filing of Papers. Unless otherwise specified, papers required to be filed with the Department shall be filed with the Environmental Protection Division, Radioactive Materials Program, 4244 International Parkway, Suite 120 Atlanta, Georgia 30354. Papers required to be filed with the Department shall be deemed filed upon actual receipt with the Department at the location specified. Unless otherwise specified, the filing, when by mail, shall upon actual receipt be deemed complete as of the date of deposit in the mail. Papers may be filed at the Department's offices in Atlanta, Georgia.

(d) Payment of Fees. All licensees shall remit annual fees, in accordance with Table 1, the Radioactive Materials License Fee Schedule. Licensees shall be invoiced for annual fees. Such fees shall be due and payable thirty (30) days after the invoice date. Fees for applications for licenses shall accompany the request. Licensees with fees which are delinquent shall not have any request for amendment or renewal of their licenses, except in the interest of public health and safety, honored by the Department until such fees are paid in full or a payment plan has been accepted by the Department.

Table 1
Radioactive Materials License Fee Schedule

License Category	Fee Category	**New License Application Fee**	**Annual Fee, Nominal**	**Annual Fee, Small Entity [See subparagraph (e)]**	**Annual Fee, Lower Tier [See subparagraph (f)]**
Medical Teletherapy	A.1.a	$3,256.00	$6,623.00	$2,026.50	$1,212.75
Stereotactic Radiosurgery (i.e., Gamma Knife)	A.1.b	$3,256.00	$6,623.00	$2,026.50	$1,212.75
Broad Medical	A.10	$3,145.00	$17,057.00	$4,550.00	$3,736.25
Eye Applicators	A.11	$999.00	$3,182.00	$1,982.75	$1,169.00
Source Material	A.12	$1,998.00	$4,588.00	$435.75	$435.75
Depleted Uranium	A.12	$222.00	$666.00	$266.00	$266.00
Institutional Medical-Mult. Use (Including HDR)	A.2.a	$999.00	$3,182.00	$3,150.00	$2,336.25
Institutional Medical-Mult. Use	A.2.b	$999.00	$3,182.00	$1,982.75	$1,169.00
Institutional Medical-Mult. Use (diagnostic only)	A.2.c	$999.00	$3,182.00	$1,750.00	$936.25
Institutional Medical-Single Use (therapy only)	A.3	$999.00	$3,182.00	$1,982.75	$1,169.00
Private Practice (Therapy-HDR)	A.4.a	$999.00	$3,182.00	$3,150.00	$2,336.25
Private Practice (Limited Therapy)	A.4.b	$999.00	$3,182.00	$1,982.75	$1,169.00
Private Practice (Diagnostic Only)	A.4.c	$999.00	$3,182.00	$1,837.50	$1,023.75
Private Practice (Veterinary)	A.4.d	$555.00	$1,813.00	$1,750.00	$936.25
In-Vitro Specific Licenses	A.5	$555.00	$1,813.00	$1,470.00	$831.25
In-Vitro General Licenses	A.6	$0.00	$100.00	$100.00	$100.00
Bone Mineral Analyzers	A.7	$999.00	$3,182.00	$1,750.00	$936.25
Nuclear Pharmacy	A.8.a.1	$2,405.00	$6,253.00	$3,990.00	$3,176.25
Medical Manufacturer for Distribution	A.8.a.2	$2,405.00	$6,253.00	$2,357.25	$1,543.50
Medical Distribution or Redistribution Only (sealed	A.8.b.1	$1,885.72	$3,717.19	$1,692.25	$878.50
Medical Distribution or Redistribution Only (GL)	A.8.b.2	$407.00	$1,184.00	$1,184.00	$691.25
Mobile Nuclear Medicine	A.9.a	$999.00	$3,182.00	$2,275.00	$1,461.25
Mobile HDR	A.9.b	$999.00	$3,182.00	$2,275.00	$1,461.25
Special Nuclear Material (sealed sources in devices)	B.1.a	$481.00	$1,332.00	$1,036.00	$572.25

License Category	Fee Category	**New License Application Fee**	**Annual Fee, Nominal**	**Annual Fee, Small Entity [See subparagraph (e)]**	**Annual Fee, Lower Tier [See subparagraph (f)]**
Special Nuclear Material (power sources in devices)	B.1.b	$925.00	$2,701.00	$990.50	$526.75
Special Nuclear Material (other)	B.2	$925.00	$2,701.00	$1,895.25	$1,081.50
Pacemaker, Byproduct or SNM -- Medical Inst	B.3	$999.00	$3,182.00	$1,895.25	$1,081.50
Industrial Mfg. for Distribution	C.1	$1,628.00	$4,588.00	$2,437.75	$1,624.00
Installed Gauges	C.10.a	$555.00	$1,813.00	$1,470.00	$831.25
Gas Chromatograph, etc.	C.10.b	$555.00	$1,813.00	$1,400.00	$761.25
Portable Moisture Density Gauges, Pb analyzers,etc.	C.11	$555.00	$1,813.00	$1,750.00	$1,111.25
Calibration Sources	C.12.a	$555.00	$1,813.00	$1,750.00	$1,111.25
Calibration Sources (Radium)	C.12.b	$555.00	$1,813.00	$1,349.25	$710.50
Decontamination Services	C.13.a	$2,368.00	$5,513.00	$2,100.00	$1,461.25
Industrial (other) (NORM)(Gauge Service)	C.13.b	$2,368.00	$5,513.00	$1,750.00	$1,111.25
Contaminted Equipment	C.14	$555.00	$1,813.00	$1,349.25	$710.50
In-house Industrial Radiography	C.2	$1,480.00	$9,583.00	$3,780.00	$2,966.25
Multiple Job-Site Industrial Radiography	C.3	$1,480.00	$9,583.00	$3,780.00	$2,966.25
Gamma Irradiators (Self-Shielded)	C.4.a	$1,184.00	$3,367.00	$1,135.75	$672.00
Gamma Irradiators (<10K Ci)	C.4.b.1	$2,368.00	$5,735.00	$1,750.00	$936.25
Gamma Irradiators (>10K<100K Ci)	C.4.b.2	$22,644.00	$52,133.00	$4,462.50	$3,648.75
Gamma Irradiators (>100K<1M Ci)	C.4.b.3	$22,644.00	$52,133.00	$8,050.00	$7,236.25
Gamma Irradiators (>1M Ci)	C.4.b.4	$22,644.00	$52,133.00	$17,675.00	$16,861.25
Broad Scope Distribution, Specific (Type A)	C.5.a.1	$4,736.00	$16,095.00	$5,215.00	$4,401.25
Broad Scope Distribution, Specific (Type B)	C.5.a.2	$4,736.00	$16,095.00	$2,765.00	$1,951.25
Broad Scope Distribution, Specific (Type C)	C.5.a.3	$4,736.00	$16,095.00	$2,275.00	$1,461.25
GL Distribution (source and / or device evaluation)	C.5.b	$740.00	$1,776.00	$1,655.50	$841.75
GL Distribution (no source and /or device evaluation)	C.5.c	$407.00	$1,184.00	$1,184.00	$967.75
Possession Incident to NRC Exempt Distribution	C.6.c	$555.00	$1,813.00	$1,739.50	$925.75
Well Logging /Tracers	C.7.a	$1,221.00	$3,774.00	$2,217.25	$1,403.50
Field Flooding Studies	C.7.b	$857.15	$2,933.85	$1,750.00	$1,111.25
Nuclear Laundries	C.8	$8,066.00	$17,057.00	$2,590.00	$1,776.25
Industrial Research & Development	C.9	$1,295.00	$3,219.00	$1,902.25	$1,088.50
Broad Scope (Academic) (Type A & B)	D.1.a	$1,998.00	$5,439.00	$2,563.75	$1,750.00
Broad Scope (Academic) (Type C)	D.1.b	$1,998.00	$5,439.00	$2,075.50	$1,261.75
Broad Scope (Industrial R&D) (Type A)	D.2.a	$1,998.00	$5,439.00	$2,563.75	$1,750.00
Broad Scope (Industrial R&D) (Type B)	D.2.b	$1,998.00	$5,439.00	$2,292.50	$1,478.75
Broad Scope (Industrial R&D) (Type C)	D.2.c	$1,998.00	$5,439.00	$2,075.50	$1,261.75

Broad Scope (Medical Manufacturer for Distribution) (R&D)	D.3	$2,405.00	$5,735.00	$2,765.00	$1,951.25
Civil Defense (Emergency Management)	E.1	$925.00	$3,330.00	$1,256.50	$617.75
Civil Defense (Emergency Response)	E.2	$925.00	$3,330.00	$1,188.25	$549.50
Teletherapy Service Co.	F	$2,368.00	$5,513.00	$1,902.25	$1,088.50
Consultants(Leak Testing Service)	G	$555.00	$1,813.00	$1,349.25	$411.25
G L Devices (except tritium safety signs)	GL	$0.00	$100.00	$100.00	$100.00
Academic (Non-Broad)	I	$1,295.00	$3,219.00	$1,400.00	$761.25
Device Evaluation	J.1	$4,595.40	$5,350.20	$1,050.00	$236.25
Source Evaluation	J.2	$1,709.40	$2,319.90	$875.00	$236.25
Radioactive Waste Disposal-Burial	L.1	$154,286.53	$155,200.77	$39,550.00	$38,736.25
Radioactive Waste Disposal-Incineration	L.2	$154,286.53	$155,200.77	$39,550.00	$38,736.25
Radioactive Waste, Processing & Repackaging	L.3.a	$3,108.00	$11,840.00	$5,390.00	$4,576.25
Radioactive Waste, Prepackaged	L.3.b	$1,813.00	$5,513.00	$3,552.50	$2,738.75
Reciprocity	K.	appropriate nominal annual fee			

(e) **Small Entity**

The size standards for Georgia small entities are as follows:

1. A small business is a business with annual receipts of $3.5 million or less except private practice physicians for which the standard is annual receipts of $1 million or less.

2. A small organization is a not-for-profit organization which is independently owned and operated and has annual receipts of $3.5 million or less.

3. Small governmental jurisdictions are governments of cities, counties, towns, school districts, or special districts with a population of less than 50,000.

4. A small educational institution is one that is (1) supported by a qualifying small governmental jurisdiction, or (2) one that is not state or publicly supported and has 500 employees or less.

(f) **Small Entity Lower Tier**

Small businesses and not-for-profit organizations with annual receipts of less than $250,000 and small governmental jurisdictions with populations of less than 20,000 qualify for the lower tier small entity fee.

(3) Penalties.

(a) Any person who engages in any of the following conduct shall be guilty of a misdemeanor as found in O.C.G.A. Section 31-13-13: 1. Hindering, obstructing, or otherwise interfering with any representative of the Department in the discharge of his official duties in making inspections or impounding radioactive materials as provided in Code Section 31-13-5 and 31-13-11 respectively; or 2. Violating the provisions of Code Section 31-13-7 (permits for disposal of radioactive waste; bonding of permittees), or any Rule or Regulation promulgated thereunder; or 3. Violating the provisions of Code Section 31-13-12 (Prohibited Uses of Sources of Radiation).

(b) Any person who submits any false statements or writings, concealment of facts, and fraudulent documents in matters within the jurisdiction of the Department shall be guilty of a felony as found in O.C.G.A. Section 16-10-20:

1. A person who knowingly and willfully falsifies, conceals, or covers up by any trick, scheme, or device a material fact; makes a false, fictitious, or fraudulent statement or representation; or makes or uses any false writing or document, knowing the same to contain any false, fictitious, or fraudulent statement or entry, in any matter within the jurisdiction of the Department shall, upon conviction thereof, be punished by a fine of not more than $1,000.00 or by imprisonment for not less than one nor more than five years, or both.

(c) Any person who:

1. Violates any licensing provision of this 31-13-1, et. seq., or any Rule, Regulation, or Order issued under 31-13-1, et. seq., or any term, condition, or limitation of any license issued under this Chapter; or

2. Commits any violation for which a license may be revoked under rules or regulations issued pursuant to this 31-13-1, et. seq., may be subject to a civil penalty, to be imposed by the Department, not to exceed $10,000.00. If any violation is a continuing one, each day of such violation shall constitute a separate violation for the purpose of computing the applicable civil penalty.

3. If a violation is found to exist during an inspection or visit and is then found to exist on a subsequent inspection or visit, there shall arise a rebuttable presumption that the violation continued throughout the period of time between the initial inspection or visit and the subsequent inspection or visit.

(d) Whenever the Department proposes to subject a person to the imposition of a civil penalty, it shall notify such person in writing:

1. Setting forth the date, facts, and nature of each act or omission with which the person is charged.

2. Specifically identifying the particular provision or provisions of the Code section, Rule, Regulation, Order, or license condition involved in the violation; and

3. Advising of each penalty which the Department proposes to impose and its amount.

(e) Such written notice shall be sent by registered or certified mail by the Department to the last known address of such person. The person so notified shall be granted an opportunity to show in writing, within ten days from receipt of such notice, why such penalty should not be imposed. The notice shall also advise such person that upon failure to pay the civil penalty subsequently determined by the Department, if any, the penalty may be collected by civil action.

(f) Upon receipt of a written response from the person so notified, alleging that a penalty should not be imposed, the Department shall consider the response and make a final decision on the appropriateness and amount of the penalty. The Department may, at its discretion, conduct an onsite inspection in order to make a final decision. In making this decision, the Department may, as deemed appropriate by the Department, consider such factors as: errors concerning the

amount or nature of the penalty, corrective action taken by the licensee, and approved disposal of radioactive material by the licensee.

(g) The Department shall inform the licensee of its final decision by registered or certified mail to the last known address of the licensee. Within 10 days of receipt of the Department's final determination concerning the civil penalty, the licensee may request an administrative hearing pursuant to the Georgia Administrative Procedure Act, O.C.G.A. 50-13-1, et. seq.

Authority: O.C.G.A Section 31-13-1 et seq., as amended. **History.** Rule entitled "Administration" adopted. F. Feb. 24, 1994; eff. Mar. 16, 1994. **Amended:** F. Oct. 4, 1994; eff. Oct. 24, 1994. **Amended:** F. Apr. 16, 1997; eff. May 6, 1997. **Amended:** F. Mar. 29, 2002; eff. Apr. 18, 2002. **Amended:** F. Aug. 16, 2013; eff. Sept 5, 2013.

391-3-17-.11 Enforcement.

A person who fails to comply with O.C.G.A. Section 31-13-1, *et seq*., or Chapter 391-3-17, shall be subject to revocation of this license and/or other sanctions provided by law. The enforcement and administration of this Chapter shall be as prescribed in O.C.G.A. 31-13-1, *et seq*., Georgia Radiation Control Act; O.C.G.A. 31-5-1, *et seq*., Administration and Enforcement; and O.C.G.A. Section 50-13-1, *et seq*., Administrative Procedure Act.

Authority Ga. L. 1964, pp. 499, 507, 566-575, as amended (Georgia Control Act). **History.** Rule entitled "Enforcement" renumbered, originally numbered 391-3-17-.09 F. Feb. 24, 1994; eff. Mar. 16, 1994.

391-3-17-.12 Licenses and Radiation Safety Requirements for Well Logging

(a) Except as set forth in (b) and (c) below, this subchapter incorporates by reference 10 CFR Part 39.

(b) The following provisions of 10 CFR Part 39 are not incorporated by reference. If there is a cross reference to a Federal citation specifically entirely excluded from incorporation, then the cross referenced citation is not incorporated by virtue of the cross reference:

1. 10 CFR 39.8, Information collection requirements: OMB approval

(c) The following provisions of 10 CFR Part 39 are incorporated by reference with the specified changes:

1. "Commission," “Nuclear Regulatory Commission,” “NRC,” and “U.S. Nuclear Regulatory Commission,” as used in the provisions of Part 39 of the Code of Federal Regulations that are incorporated by reference, means the Department, except when specifically noted in this subchapter.

2. 10 CFR 39.1(a), delete “20,” and add “and Rule 391-3-17-.03” after “of this chapter”;

3. 10 CFR 39.11, replace “Form NRC 313, “Application for Material License.” with “forms available from the Department” and replace “appropriate NRC Regional Office listed in appendix D of part 20 of this chapter” with “Department”;

4. 10 CFR 39.15(a)(5)(iii)(B), replace “§ 20.1901(a)” with “Rule 391-3-17-.03”;

5. 10 CFR 39.31(a)(1), replace “§ 20.1901(a)” with “Rule 391-3-17-.03”;

6. 10 CFR 39.31(a)(2), replace “§ 20.1901(a)” with “Rule 391-3-17-.03”;

7. 10 CFR 39.33(a), replace “part 20 of this chapter” with “Rule 391-3-17-.03”;

8. 10 CFR 39.35(d)(2), replace “appropriate NRC Regional Office listed in appendix D of part 20 of this chapter” with “Department”;

9. 10 CFR 39.61(a)(2)(i), delete “20,” and add “and Rule 391-3-17-.03” after “of this chapter”;

10. 10 CFR 39.61(b)(1), delete “parts 19 and 20 of this chapter” and add “Rules 391-3-17-.03 and .07”;

11. 10 CFR 39.63(h), replace “§ 20.1906 of this chapter” with “Rule 391-3-17-.03”;

12. 10 CFR 39.71(b), replace “§ 20.1003 of this chapter” with “Rule 391-3-17-.03”;

13. 10 CFR 39.73(a), replace “19, 20, and 39” with “Rules 391-3-17-.03, .07 and .12”;

14. 10 CFR 39.75(d), replace § 71.5” with “Rule 391-3-17-.06”;

15. 10 CFR 39.75(e), add “, or NRC” after “Agreement State”;

16. 10 CFR 39.77(a), replace “NRC Regional Office by telephone” with “Department by telephone number as per subparagraph 391-3-17-.01(13)(a) of this chapter”; and

17. 10 CFR 39.77(b), replace “20.2201-20.2202, 20.2203 and 30.50” with “Rule 391-3-17-.03.”

(d) Reports that are to be submitted to the Department pursuant to this subchapter shall be submitted to the address in Rule 391-3-17-.01(13).

Authority: O.C.G.A. Section 31-13-1 et seq., as amended.

NOTICE TO EMPLOYEES

STANDARDS FOR PROTECTION AGAINST RADIATION

YOUR EMPLOYER'S RESPONSIBILITY

Your Employer is required to:

1. Apply the Rules of this Chapter (391-3-17) and the conditions of the Employer's Radioactive Materials license to all work under the license.
2. Post or otherwise make available to you a copy of the Georgia Department of Natural Resources rules entitled, "Radioactive Materials", licenses, and operating procedures which apply to work you are engaged in, and explain the provisions to you.
3. Post any Notices of Violation and Orders involving radiological working conditions.

YOUR RESPONSIBILITY AS A WORKER

You should familiarize yourself with those provisions of the Georgia Department of Natural Resources rules entitled, "Radioactive Materials," and the operating procedures that apply to the work you are engaged in. You should observe these provisions for your own protection and the protection of your co-workers.

WHAT IS COVERED BY THESE REGULATIONS?

1. Limits on exposure to radiation and radioactive materials in controlled and uncontrolled areas;
2. Measures to be taken after accidental exposure;
3. Personnel monitoring, surveys, and equipment;
4. Caution signs, labels, and safety interlock equipment;
5. Exposure records and reports;
6. Options for workers regarding inspections; and
7. Related matters.

INQUIRIES

Inquiries dealing with these matters can be sent to:
Georgia Department of Natural Resources
Radioactive Materials Program
4244 International Parkway, Suite 120
Atlanta, Georgia 30354
(404) 362-2675

REPORTS ON YOUR RADIATION EXPOSURE HISTORY

1. The Georgia Department of Natural Resources rules entitled, "Radioactive Materials," require that your Employer give you a written report if you receive any exposure in excess of any applicable limit, as set forth in Chapter 391-3-17 or in the Employer's Radioactive Materials license. The basic limits for exposure to employees are set forth in Rule 391-3-17-.03 (5) (a), (b), (c), (d), (e), (f), (g), and (h). These paragraphs specify limits on exposure to radiation and exposure to concentrations of radioactive materials in air and water.
2. If you work where personnel monitoring is required, and if you request information on your radiation exposure:
   a. Your Employer must advise you annually of your exposure to radiation; and
   b. Your Employer must furnish you a complete personnel exposure record, detailing any overexposures to radiation; and
   c. Your Employer must give you a written report, upon termination of your employment, of your radiation exposure.

INSPECTIONS

All activities under the Employer's Radioactive Materials license are subject to inspection by representatives of the Georgia Department of Natural Resources. In addition, any worker, or representative of workers, who believes that there is a violation of the State law, Rules or the Employer's Radioactive Materials license with regard to radiological working conditions in which the worker is engaged, may request an inspection by sending a notice of alleged violation to Georgia Department of Natural Resources. The request must set forth the specific grounds for the notice and must be signed by the worker or by the representative of the workers. During inspections, agency inspectors may confer privately with workers, and any worker may bring to the attention of the inspectors any past or present condition which is believed contributed to or caused any violation as described above.

POSTING REQUIREMENT

Copies of this notice must be posted in a sufficient number of places in every establishment where employees are employed in activities licensed pursuant to Georgia Department of Natural Resources' Rule 391-3-17-.02. This posting permits employees working in or frequenting any portion of a controlled area to observe a copy on the way to or from their place of employment.

LEGAL AUTHORITY: Official Code of Georgia Annotated (O.C.G.A.) § 31-13

Revised: September 2013

AVISO A EMPLEADOS

NORMAS PARA LA PROTECCION CONTRA LA RADIACION

RESPONSABILIDADES DE SU EMPLEADOR

Su empleador está obligado a:

1. Aplicar las regulaciones del Capítulo (391-3-17) y las condiciones de su Licencia de Materiales Radioactivos a todo trabajo relacionado con ésta.
2. Anunciar o darle a usted una copia de la Regla del Departamento de Recursos Naturales titulada "Materiales Radioactivos", licencias y procedimientos operativos que aplican al trabajo que usted estará realizando, además de explicarle a usted sus estipulaciones.
3. Anunciar cualquier Notificación de Violación u Orden relacionada con condiciones de trabajo radiológico.

SU RESPONSABILIDAD COMO TRABAJADOR

Usted debe familiarizarse con las estipulaciones de la Regla del Departamento de Recursos Naturales titulada "Materiales Radioactivos" y con los procedimientos operativos que aplican al trabajo que usted estará realizando. Usted debe observar estas estipulaciones para su propia protección y para la protección de sus compañeros de trabajo.

¿QUE CUBRE ESTAS REGULACIONES?

1. Límites de exposición a la radiación y a materiales radioactivos en áreas controladas y no controladas;
2. Medidas a tomar luego de una exposición accidental;
3. Monitorización del personal, encuestas y equipo;
4. Letreros y etiquetas de precaución y equipo de seguridad entrelazado;
5. Registros y reportes de exposición a radiación;
6. Opciones para trabajadores con relación a inspecciones; y
7. Otra información relacionada.

PREGUNTAS

Preguntas relacionadas con el material expuesto en este aviso pueden ser enviadas a:
Georgia Department of Natural Resources
Radioactive Materials Program
4244 International Parkway, Suite 120
Atlanta, Georgia 30354
(404) 362-2675

REPORTES DE SU HISTORIAL DE EXPOSICION A RADIACION

1. La Regla del Departamento de Recursos Naturales titulada "Materiales Radioactivos" requiere que su empleador le dé por escrito un reporte si usted ha sido expuesto a radiación en exceso de un límite específico, según lo establecido en el Capítulo 391-3-17 o en la Licencia de Materiales Radioactivos. Los límites básicos de exposición a radiación están estipulados en la Regla 391-3-17-.03(5)(a), (b), (c), (d), (e), (f), (g) y (h). Estos párrafos especifican límites en la exposición a radiación y a concentraciones de materiales radioactivos en el aire y en el agua.

2. Si usted trabaja en un area donde es requerido que el personal sea monitorizado y si usted solicita información sobre su exposición a radiación:

a. su empleador deberá comunicarle anualmente sobre su exposición a radiación;
b. su empleador deberá entregarle un registro completo sobre la esposición del personal a radiación, detallando cualquier sobre-exposición a radiación; y
c. su empleador deberá darle por escrito, al terminar su empleo, un reporte de su exposición a radiación.

INSPECCIONES

Toda actividad cubierta bajo la Licencia de Materiales Radioactivos otorgada a su empleador está sujeta a inspección por los representantes del Departamento de Recursos Naturales del Estado de Georgia. En adición, cualquier trabajador o su representante que cree que ha habido una violación a la Ley Estatal, a la Regla del Departamento de Recursos Naturales titulada "Materiales Radioactivos" o a las estipulaciones de la licencia otorgada con respecto a las condiciones de trabajo radiológico que realiza el trabajador, éste puede pedir una inspección enviando una nota sobre la alegada violación al Departamento de Recursos Naturales. Esta petición debe especificar los datos de la alegada violación y debe ser firmada por el trabajador o representante de éste. Durante las inspecciones, los inspectores de la agencia podrán hablar privadamente con trabajadores y cualquier trabajador podrá llamar la atención del inspector a cualquier condición de trabajo, presente o pasada, que pueda ser constituida como violación a lo descrito arriba.

REQUISITO DE ANUNCIAR

Copias de este aviso deben ser colocadas en varios lugares donde los empleados están desempeñando labores cubiertas por la licencia, de acuerdo a la Regla 391-3-17-.02. El despliegue de este aviso permite que empleados trabajando o frecuentando cualquier área controlada puedan leerlo al entrar o salir del área.

AUTORIDAD LEGAL: Código Legal de Georgia (O.C.G.A.) § 31-13

Revisado: septiembre 2013