AIR PERMIT APPLICATION AND PREVENTION OF SIGNIFICANT DETERIORATION ANALYSIS FOR THE LIVE OAKS POWER PROJECT, GLYNN COUNTY, GEORGIA

Submitted by:

Live Oaks Company, LLC
1314 Independence Way
Marietta, Georgia 30062-6257

Prepared By:

Golder Associates Inc.
6241 NW 23rd Street, Suite 500
Gainesville, Florida 32653-1500

November 2008

073-3618

DISTRIBUTION:
2 Copies – Live Oaks Company, LLC
4 Copies – Georgia Department of Natural Resources
2 Copies – Golder Associates Inc.

TABLE OF CONTENTS

COVER LETTER

AIR PERMIT APPLICATION

PSD REPORT AND ACID RAIN FORMS

SECTION PAGE

1.0 INTRODUCTION AND EXECUTIVE SUMMARY 1-1
1.1 Introduction 1-1
1.2 Prevention of Significant Deterioration Requirements 1-2
1.3 Summary of Results 1-3
1.4 Air Permit Application Organization 1-3
2.0 PROJECT DESCRIPTION 2-1
2.1 Site Description 2-1
2.2 Power Plant 2-1
2.3 Proposed Source Emissions and Stack Parameters 2-4
2.4 Site Layout, Structures, and Stack Sampling Facilities 2-7
3.0 AIR QUALITY REVIEW REQUIREMENTS AND APPLICABILITY 3-1
3.1 National and State AAQS 3-1
3.2 PSD Requirements 3-1
3.2.1 General Requirements 3-1
3.2.2 Control Technology Review 3-2
3.2.3 Source Impact Analysis 3-4
3.2.4 Air Quality Monitoring Requirements 3-6
3.2.5 Source Information/Good Engineering Practice Stack Height 3-6
3.2.6 Additional Impact Analysis 3-7
3.3 Emission Standards 3-7
3.3.1 New Source Performance Standards 3-7
3.3.2 Georgia Rules 3-10
3.3.3 Georgia Air Permitting Requirements 3-11
3.4 PSD Applicability to the Project 3-11
3.4.1 Area Classification 3-11
3.4.2 PSD Review 3-11
3.4.3 Emission Standards 3-12
3.4.4 Ambient Monitoring 3-12
3.4.5 GEP Stack Height Impact Analysis 3-13

TABLE OF CONTENTS

3.4.6 Nonattainment Review 3-13
3.4.7 Other Clean Air Act Requirements 3-13
4.0 CONTROL TECHNOLOGY REVIEW 4-1
4.1 Applicability 4-1
4.2 New Source Performance Standards 4-1
4.3 Overview of Proposed BACT 4-2
4.4 BACT Analysis 4-3
4.4.1 Summary of Top-Down Process 4-3
4.5 BACT Analysis for Combined-Cycle CTs 4-7
4.5.1 NO_x 4-7
4.5.2 CO and VOC 4-18
4.5.3 $PM/PM_{10}/PM_{2.5}$ 4-21
4.5.4 SO_2 and H_2SO_4 4-24
4.6 Fuel Gas Heater BACT Analysis 4-26
4.6.1 NO_x 4-26
4.6.2 SO_2 and H_2SO_4 4-30
4.6.3 CO and VOC 4-31
4.6.4 $PM/PM_{10}/PM_{2.5}$ 4-33
4.7 Emergency Engines (Emergency Generator and Fire Water Pump) BACT Analysis 4-36
4.7.1 NO_x 4-36
4.7.2 SO_2 and H_2SO_4 4-38
4.7.3 CO and VOC 4-40
4.7.4 $PM/PM_{10}/PM_{2.5}$ 4-41
4.8 Cooling Tower BACT Analysis 4-43
5.0 AMBIENT MONITORING ANALYSIS 5-1
6.0 AIR QUALITY IMPACT ANALYSIS 6-1
6.1 Significant Impact Analysis Approach 6-1
6.1.1 In Site Vicinity 6-1
6.1.2 At PSD Class I Area(s) 6-1
6.2 Preconstruction Monitoring Analysis Approach 6-2
6.3 Air Modeling Analysis Approach 6-3
6.3.1 General Procedures 6-3

TABLE OF CONTENTS

6.3.2 Model Selection 6-4
6.3.3 Meteorological Data 6-6
6.3.4 Emission Inventory 6-7
6.3.5 Building Downwash Effects 6-8
6.3.6 Receptor Locations 6-10
6.3.7 Toxic Air Pollutant Analysis 6-11
6.4 Air Modeling Results 6-12
6.4.1 Site Vicinity 6-12
6.4.2 Wolf Island and Okefenokee NWAs 6-13
6.4.3 Air Toxic Pollutants 6-13
7.0 ADDITIONAL IMPACT ANALYSIS 7-1
7.1 Impacts due to Direct Growth 7-1
7.2 Impact on Soils, Vegetation, Wildlife, and Visibility in the Project's Vicinity 7-1
7.3 Impacts upon PSD Class I Areas 7-4
7.3.1 Identification of AQRVs and Methodology 7-4
7.3.2 Impacts to Soils 7-6
7.3.3 Impacts to Vegetation 7-7
7.3.4 Impacts to Wildlife 7-12
7.3.5 Impacts upon Visibility 7-13
7.3.6 Sulfur and Nitrogen Deposition 7-19

TABLE OF CONTENTS

LIST OF TABLES

Table 1-1 Summary of Maximum Annual Pollutant Emissions for the Live Oaks Power Project

Table 2-1 Stack, Operating, and Emissions Data for the Combustion Turbines/HRSG and Duct Burners for Combined Cycle, Natural Gas Combustion, Baseload Operation

Table 2-2 Stack, Operating, and Emission Data for the Combustion Turbines/HRSGs and Duct Burners for Combined Cycle, Natural Gas Combustion, 70% and 60% Load Operation

Table 2-3 Summary of the Maximum Potential Hourly and Annual Emissions for the CT/HRSG/DB in Combined Cycle Operations

Table 2-4 Physical, Performance, and Emissions Data for the Mechanical Draft Cooling Tower

Table 2-5 Performance, Stack Parameters, and Emissions for the Emergency Generator

Table 2-6 Performance, Stack Parameters, and Emissions for the Diesel Fire Pump

Table 2-7 Performance, Stack Parameters, and Emissions for Fuel Gas Heater

Table 2-8 Summary of the Maximum Potential Annual Emissions for Comparison to the PSD Significant Emissions Rate

Table 3-1 National and State AAQS, Allowable PSD Increments, and Significant Impact Levels

Table 3-2 PSD Significant Emission Rates and *De Minimis* Monitoring Concentrations

Table 3-3 Net Increase in Emissions Due to Proposed Project Compared to the PSD Significant Emission Rates

Table 3-4 Predicted Net Increase in Impacts Due to Proposed Project Compared to PSD *De Minimis* Monitoring Concentrations

Table 4-1 Summary of NO_x BACT Determinations for Natural Gas-Fired CTs (2003-2008)

Table 4-2 Summary of CO BACT Determinations for Natural Gas-Fired CTs (2003-2008)

Table 4-3 Summary of PM BACT Determinations for Natural Gas-Fired CTs (2003-2008)

Table 4-4 Summary of SO_2 and SAM BACT Determinations for Natural Gas-Fired CTs (2003-2008)

Table 4-5 Summary of BACT Determinations for Fuel Heaters (2003-2008)

Table 4-6 Summary of NO_x, VOC, and PM LAER and BACT Determinations for Emergency Engines (2003-2008)

Table 4-7 Summary of CO and SO_2 BACT Determinations for Emergency Engines (2003-2008)

Table 4-8 Summary of BACT Determinations for Cooling Towers (2003-2008)

Table 5-1 Summary of Maximum 03 Concentrations Measured Near The Project Site

Table 6-1 Major Features of the AERMOD Model, Version 07026

Table 6-2 Major Features of the CALPUFF Model, Version 5.8

Table 6-3 Load Analysis Results for the Two CTs Firing Natural Gas in Combined-Cycle Operation in the Project Vicinity

TABLE OF CONTENTS

Table 6-4 Summary of Maximum Concentrations Predicted for Proposed Project Compared to EPA Class II Significant Impact Levels

Table 6-5 Load Analysis Results for the Two CTs Firing Natural Gas in Combined-Cycle Operation at the Wolf Island NWA Class I Area

Table 6-6 Summary of Maximum Concentrations Predicted for Proposed Project Compared to EPA Class I Significant Impact Levels

Table 6-7 Summary of Maximum Toxic Air Pollutant Concentrations Predicted for Two CTs Compared to the Georgia EPD's Acceptable Ambient Concentration Levels

Table 7-1 Maximum Pollutant Concentrations Predicted at the PSD Class I Areas for the AQRV Analysis

Table 7-2 SO_2 Effects Levels for Various Plant Species

Table 7-3 Sensitivity Groupings of Vegetation Based on Visible Injury at Different SO_2 Exposures

Table 7-4 Examples of Reported Effects of Air Pollutants at Concentrations Below National Secondary Ambient Air Quality Standards

Table 7-5 Plume Visual Impact Analysis - Screening Level 2 - Identification of Worst-Case Meteorological Conditions

Table 7-6 Maximum 24-Hour Visibility Impairment Predicted for the Proposed Project at the Okefenokee NWA PSD Class I Area

Table 7-7 Maximum Annual Nitrogen and Sulfur Deposition Predicted for the Proposed Project at the PSD Class I Areas

LIST OF FIGURES

Figure 1-1 General Location

Figure 1-2 Site Location

Figure 2-1 Process Flow Diagram for Each CT/HRSG Train, Baseload Operation, Turbine Inlet Temperature of 20°F

Figure 2-2 Process Flow Diagram for Each CT/HRSG Train, Baseload Operation, Turbine Inlet Temperature of 59°F

Figure 2-3 Process Flow Diagram for Each CT/HRSG Train, Baseload Operation - Power Augmentation, Turbine Inlet Temperature of 95°F

Figure 2-4 Facility Plot Plan

Figure 2-5 Profile of Combustion Turbine and Heat Recovery Steam Generator

Figure 6-1 Near Field Layout of Buildings, Stacks, and Site Boundary

Figure 6-2 Far Field, Receptor Grid

Figure 7-1 VISCREEN Model Output Level 1

Figure 7-2 VISCREEN Model Output Level 2 – Nighttime Only

TABLE OF CONTENTS

Figure 7-3 VISCREEN Model Output Level 2 – Daytime Only

APPENDICES

Appendix A Emissions Information on Siemens SGT6-5000F Combustion Turbine

Appendix B Air Quality Modeling Protocol Documents

Appendix C Example Model Input and Summary Files

APPLICATION

State of Georgia
Department of Natural Resources
Environmental Protection Division
Air Protection Branch

Stationary Source Permitting Program
4244 International Parkway, Suite 120
Atlanta, Georgia 30354
404/363-7000
Fax: 404/363-7100

SIP AIR PERMIT APPLICATION

EPD Use Only

Date Received: _____ Application No. _____

FORM 1.00: GENERAL INFORMATION

1. Facility Information

Facility Name: Live Oaks Power Plant

AIRS No. (if known): 04-13- -

Facility Location: Street: Green Swamp Road

City: Sterling Georgia Zip: 31525 County: Glynn

2. Facility Coordinates

Latitude: 31° 17' 04" **NORTH** Longitude: 81° 33' 29" **WEST**

UTM Coordinates: 446,874 **EAST** 3,461,265 **NORTH** **ZONE** 17

3. Facility Owner

Name of Owner: Live Oaks Company, LLC

Owner Address Street: 1314 Independence Way

City: Marietta State: GA Zip: 30062-6257

4. Permitting Contact and Mailing Address

Contact Person: Burt Wallace Title: Vice President and Manager

Telephone No.: (770) 579 9428 Ext. _____ Fax No.: _____

Email Address: burt_1@bellsouth.net

Mailing Address: Same as: Facility Location: ☐ Owner Address: ☒ Other: ☐

If Other: Street Address: _____

City: _____ State: _____ Zip: _____

5. Authorized Official

Name: Burt Wallace Title: Vice President and Manager

Address of Official Street: 1314 Independence Way

City: Marietta State: GA Zip: 30062-6257

This application is submitted in accordance with the provisions of the Georgia Rules for Air Quality Control and, to the best of my knowledge, is complete and correct.

Signature: _____ Date: 11/18/2008

6. **Reason for Application: (Check all that apply)**

☒ New Facility (to be constructed)

☐ Existing Facility (initial or modification application)

☒ Permit to Construct

☐ Permit to Operate

☐ Change of Location

☐ Permit to Modify Existing Equipment: Affected Permit No.: _____

☐ Revision of Data Submitted in an Earlier Application

Application No.: _____

Date of Original Submittal: _____

7. **Permitting Exemption Activities (for permitted facilities only):**

Have any exempt modifications based on emission level per Georgia Rule 391-3-1-.03(6)(i)(3) been performed at the facility that have not been previously incorporated in a permit?

☐ **No** ☐ **Yes, please fill out the SIP Exemption Attachment** (See Instructions for the attachment download)

8. **Has assistance been provided to you for any part of this application?**

☐ **No** ☐ **Yes, SBAP** ☒ **Yes, a consultant has been employed or will be employed.**

If yes, please provide the following information:

Name of Consulting Company: Golder Associates, Inc.

Name of Contact: Steve Moeller, P.E.

Telephone No.: (770) 496-1893 Fax No.: (770) 934-9476

Email Address: Steve_Moeller@golder.com

Mailing Address: Street: 3730 Chamblee Tucker Road

City: Atlanta State: GA Zip: 30341

Describe the Consultant's Involvement:

Prepare permit application, control technology analysis, air dispersion modeling, air toxics analysis, prepare PSD report, and other related analysis.

9. **Submitted Application Forms:** Select only the necessary forms for the facility application that will be submitted.

No. of Forms	Form
1	2.00 Emission Unit List
1	2.01 Boilers and Fuel Burning Equipment
	2.02 Storage Tank Physical Data
	2.03 Printing Operations
	2.04 Surface Coating Operations
	2.05 Waste Incinerators (solid/liquid waste destruction)
	2.06 Manufacturing and Operational Data
1	3.00 Air Pollution Control Devices (APCD)
	3.01 Scrubbers
	3.02 Baghouses & Other Filter Collectors
	3.03 Electrostatic Precipitators
1	4.00 Emissions Data
1	5.00 Monitoring Information
	6.00 Fugitive Emission Sources
1	7.00 Air Modeling Information

10. **Construction or Modification Date**

Estimated Start Date: January, 2010

11. If confidential information is being submitted in this application, were the guidelines followed in the "Procedures for Requesting that Submitted Information be treated as Confidential"?

☐ No ☐ Yes

12. New Facility Emissions Summary

Criteria Pollutant	New Facility	
	Potential (tpy)	Actual (tpy)
Carbon monoxide (CO)	418.5	418.5
Nitrogen oxides (NOx)	185.1	185.1
Particulate Matter (PM)	76.0	76.0
PM <10 microns (PM10)	74.3	74.3
PM <2.5 microns (PM2.5)	70.6	70.6
Sulfur dioxide (SO_2)	32.9	32.9
Volatile Organic Compounds (VOC)	132.5	132.5
Total Hazardous Air Pollutants (HAPs)	9.4	9.4
Individual HAPs Listed Below:		
See Table A5 of Attachment A		

13. Existing Facility Emissions Summary

Criteria Pollutant	Current Facility		After Modification	
	Potential (tpy)	Actual (tpy)	Potential (tpy)	Actual (tpy)
Carbon monoxide (CO)				
Nitrogen oxides (NOx)				
Particulate Matter (PM)				
PM <10 microns (PM10)				
PM <2.5 microns (PM2.5)				
Sulfur dioxide (SO_2)				
Volatile Organic Compounds (VOC)				
Total Hazardous Air Pollutants (HAPs)				
Individual HAPs Listed Below:				

14. 4-Digit Facility Identification Code:

SIC Code:	4911	SIC Description:	Electric Services
NAICS Code:	221112	NAICS Description:	Electric power generation, fossil fuel (e.g., coal, oil, gas)

15. Description of general production process and operation for which a permit is being requested. If necessary, attach additional sheets to give an adequate description. Include layout drawings, as necessary, to describe each process. References should be made to source codes used in the application.

Application is for the construction of a nominal 600-MW combined cycle power generation facility consisting of two natural gas-fired combustion turbines (CTs) and associated heat recovery steam generators (HRSGs) including duct burners, one fuel heater, one emergency generator, one emergency fire water pump, and one mechanical draft cooling tower.

See PSD Report in Attachment A for additional information.

16. Additional information provided in attachments as listed below:

Attachment A - PSD Report

Attachment B - Acid Rain Forms

Attachment C -

Attachment D -

Attachment E -

Attachment F -

17. Additional Information: Unless previously submitted, include the following two items:

☒ Plot plan/map of facility location or date of previous submittal: see PSD Report

☒ Flow Diagram or date of previous submittal: see PSD Report

Facility Name: Live Oaks Power Plant **Date of Application:** November 17, 2008

FORM 2.00 – EMISSION UNIT LIST

Emission Unit ID	Name	Manufacturer and Model Number	Description
CT1	Combustion Turbine Unit 1	Siemens SGT6-5000F	Natural gas-fired nominal 220-MW combustion turbine
CT2	Combustion Turbine Unit 2	Siemens SGT6-5000F	Natural gas-fired nominal 220-MW combustion turbine
DB1	Duct Burner Unit 1	to be decided	359 MMBtu/hr (HHV) duct burner
DB2	Duct Burner Unit 1	to be decided	359 MMBtu/hr (HHV) duct burner
FGH	Fuel Heater	to be decided	10 MMBtu/hr natural gas-fired fuel heater
EM1	Emergency Generator	to be decided	600-kW emergency generator
EM2	Emergency Fire-Water Pump	to be decided	310-hp emergency pump
COOL	Cooling Tower	to be decided	10-cell mechanical draft cooling tower

Facility Name: Live Oaks Power Plant **Date of Application:** November 17, 2008

FORM 2.01 – BOILERS AND FUEL BURNING EQUIPMENT

Emission Unit ID	Type of Burner	Type of Draft[1]	Design Capacity of Unit (MMBtu/hr Input)	Percent Excess Air	Dates		Date & Description of Last Modification
					Construction	Installation	
CT1	Dry Low NO_x		1,990 (HHV)[(a)]		To be decided	To be decided	
CT2	Dry Low NO_x		1,990 (HHV)[(a)]		To be decided	To be decided	
DB1	Low NO_x		359 (HHV)		To be decided	To be decided	
DB2	Low NO_x		359 (HHV)		To be decided	To be decided	
FGH	Low NO_x		10		To be decided	To be decided	
EM1	Internal Combustion Engine	Not applicable	6.3		To be decided	To be decided	
EM2	Internal Combustion Engine	Not applicable	2.43		To be decided	To be decided	

[1] This column does not have to be completed for natural gas only fired equipment.
(a) Based on 59 °F ambient temperature. See PSD Report in Attachment A.

Facility Name: Live Oaks Power Plant **Date of Application:** November 17, 2008

FUEL DATA

Emission Unit ID	Fuel Type	Potential Annual Consumption				Hourly Consumption		Heat Content		Percent Sulfur		Percent Ash in Solid Fuel	
		Total Quantity		Percent Use by Season									
		Amount	Units	Ozone Season May 1 - Sept 30	Non-ozone Season Oct 1 - Apr 30	Max.	Avg.	Min.	Avg.	Max.	Avg.	Max.	Avg.
CT1	NG	748.27	10^6 lbs	41.9	58.1	85,419 lbs	NA	20,982 Btu/lb	NA	0.8 gr/100 scf	NA	NA	NA
CT2	NG	748.27	10^6 lbs	41.9	58.1	85,419 lbs	NA	20,982 Btu/lb	NA	0.8 gr/100 scf	NA	NA	NA
DB1	NG	83.1	10^6 lbs	41.9	58.1	9,484 lbs	NA	20,982 Btu/lb	NA	0.8 gr/100 scf	NA	NA	NA
DB2	NG	83.1	10^6 lbs	41.9	58.1	9,484 lbs	NA	20,982 Btu/lb	NA	0.8 gr/100 scf	NA	NA	NA
FGH	NG	42.89	10^6 scf	41.9	58.1	9,484 lbs	NA	20,982 Btu/lb	NA	0.8 gr/100 scf	NA	NA	NA
EM1	Diesel	22,826	gal	41.9	58.1	45.6 gal	NA	138,000 Btu/gal	NA	0.05 %	NA	NA	NA
EM2	Diesel	8,804	gal	41.9	58.1	17.6 gal	NA	138,000 Btu/gal	NA	0.05 %	NA	NA	NA

Fuel Supplier Information

Fuel Type	Name of Supplier	Phone Number	Supplier Location			
			Address	City	State	Zip
NG	Georgia Natural Gas					

Facility Name: Live Oaks Power Plant **Date of Application:** November 17, 2008

Form 3.00 – AIR POLLUTION CONTROL DEVICES - PART A: GENERAL EQUIPMENT INFORMATION

APCD Unit ID	Emission Unit ID	APCD Type (Baghouse, ESP, Scrubber etc)	Date Installed	Make & Model Number (Attach Mfg. Specifications & Literature)	Unit Modified from Mfg Specifications?	Gas Temp. °F		Inlet Gas Flow Rate (acfm)
						Inlet	Outlet	
SCR1	CT1 & DB1	SCR	To be decided	To be decided	No	NA	190.1*	NA
SCR1	CT2 & DB2	SCR	To be decided	To be decided	No	NA	190.1*	NA
OXCAT1	CT1 & DB1	Oxidation Catalyst	To be decided	To be decided	No	1,102	NA	2,693,347*
OXCAT2	CT2 & DB2	Oxidation Catalyst	To be decided	To be decided	No	1,102	NA	2,693,347*

Facility Name: Live Oaks Power Plant **Date of Application:** November 17, 2008

Form 3.00 – AIR POLLUTION CONTROL DEVICES – PART B: EMISSION INFORMATION

APCD Unit ID	Pollutants Controlled	Percent Control Efficiency		Inlet Stream To APCD		Exit Stream From APCD		Pressure Drop Across Unit (Inches of water)
		Design	Actual	lb/hr	Method of Determination	lb/hr	Method of Determination	
SCR1	NO_x	90	NA	213.5*	Mass Balance	21.7*	Mass Balance	NA
SCR2	NO_x	90	NA	213.5*	Mass Balance	21.7*	Mass Balance	NA
OXCAT1	CO	80	NA	79.4*	Mass Balance	15.9*	Mass Balance	NA
OXCAT2	CO	80	NA	79.4*	Mass Balance	15.9*	Mass Balance	NA

* Baseload operation with duct firing at 59 °F.

Facility Name: Live Oaks Power Plant **Date of Application:** November 17, 2008

FORM 4.00 – EMISSION INFORMATION

Emission Unit ID	Air Pollution Control Device ID	Stack ID	Pollutant Emitted	Emission Rates				
				Hourly Actual Emissions (lb/hr)	Hourly Potential Emissions (lb/hr)	Actual Annual Emission (tpy)	Potential Annual Emission (tpy)	Method of Determination
CT1 & DB1	SCR1	S001	NO_x[1]	23.3	23.3	88.6	88.6	See Attachment A, PSD Report
CT1 & DB1	OXCAT1	S001	CO	16.2	16.2	206.5	206.5	See Attachment A, PSD Report
CT1 & DB1	NA	S001	VOC	18.4	18.4	65.7	65.7	See Attachment A, PSD Report
CT1 & DB1	NA	S001	$PM/PM_{10}/PM_{2.5}$	12.6	12.6	35.2	35.2	See Attachment A, PSD Report
CT1 & DB1	NA	S001	SO_2	5.7	5.7	16.4	16.4	See Attachment A, PSD Report
CT1 & DB1	NA	S001	SAM	1.2	1.2	4.7	4.7	See Attachment A, PSD Report
CT1 & DB1	NA	S001	HAPS	1.1	1.1	4.7	4.7	See Attachment A, PSD Report
CT2 & DB2	SCR2	S002	NO_x[1]	23.3	23.3	88.6	88.6	See Attachment A, PSD Report
CT2 & DB2	OXCAT2	S002	CO	16.2	16.2	206.5	206.5	See Attachment A, PSD Report
CT2 & DB2	NA	S002	VOC	18.4	18.4	65.7	65.7	See Attachment A, PSD Report
CT2 & DB2	NA	S002	$PM/PM_{10}/PM_{2.5}$	12.6	12.6	35.2	35.2	See Attachment A, PSD Report
CT2 & DB2	NA	S002	SO_2	5.7	5.7	16.4	16.4	See Attachment A, PSD Report
CT2 & DB2	NA	S002	SAM	1.2	1.2	4.7	4.7	See Attachment A, PSD Report
CT2 & DB2	NA	S002	HAPS	1.1	1.1	4.7	4.7	See Attachment A, PSD Report

Facility Name: Live Oaks Power Plant **Date of Application:** November 17, 2008

FORM 4.00 – EMISSION INFORMATION

Emission Unit ID	Air Pollution Control Device ID	Stack ID	Pollutant Emitted	Emission Rates				
				Hourly Actual Emissions (lb/hr)	Hourly Potential Emissions (lb/hr)	Actual Annual Emission (tpy)	Potential Annual Emission (tpy)	Method of Determination
FGH	NA	S003	NO_x[1]	2.36	2.36	5.17	5.17	See Attachment A, PSD Report
FGH	NA	S003	CO	1.79	1.79	3.92	3.92	See Attachment A, PSD Report
FGH	NA	S003	VOC	0.10	0.10	0.22	0.22	See Attachment A, PSD Report
FGH	NA	S003	$PM/PM_{10}/PM_{2.5}$	0.08	0.08	0.17	0.17	See Attachment A, PSD Report
FGH	NA	S003	SO_2	0.02	0.02	0.05	0.05	See Attachment A, PSD Report
EM1	NA	S004	NO_x[1]	8.47	8.47	2.12	2.12	See Attachment A, PSD Report
EM1	NA	S004	CO	4.63	4.63	1.16	1.16	See Attachment A, PSD Report
EM1	NA	S004	VOC	2.21	2.21	0.55	0.55	See Attachment A, PSD Report
EM1	NA	S004	$PM/PM_{10}/PM_{2.5}$	0.26	0.26	0.07	0.07	See Attachment A, PSD Report
EM1	NA	S004	SO_2	0.33	0.33	0.08	0.08	See Attachment A, PSD Report
EM2	NA	S005	NO_x[1]	2.05	2.05	0.51	0.51	See Attachment A, PSD Report
EM2	NA	S005	CO	1.78	1.78	0.44	0.44	See Attachment A, PSD Report
EM2	NA	S005	VOC	0.85	0.85	0.21	0.21	See Attachment A, PSD Report
EM2	NA	S005	$PM/PM_{10}/PM_{2.5}$	0.10	0.10	0.03	0.03	See Attachment A, PSD Report

Facility Name: Live Oaks Power Plant **Date of Application:** November 17, 2008

FORM 4.00 – EMISSION INFORMATION

Emission Unit ID	Air Pollution Control Device ID	Stack ID	Pollutant Emitted	Emission Rates				
				Hourly Actual Emissions (lb/hr)	Hourly Potential Emissions (lb/hr)	Actual Annual Emission (tpy)	Potential Annual Emission (tpy)	Method of Determination
EM2	NA	S005	SO_2	0.13	0.13	0.03	0.03	See Attachment A, PSD Report
COOL	NA	COOL1-COOL10	PM	1.22	1.22	5.3	5.3	See Attachment A, PSD Report
COOL	NA	COOL1-COOL10	PM_{10}	0.84	0.84	3.7	3.7	See Attachment A, PSD Report
COOL	NA	COOL1-COOL10	$PM_{2.5}$	0.003	0.003	0.012	0.012	See Attachment A, PSD Report

[1] NO_x as NO_2.

Facility Name: Live Oaks Power Plant **Date of Application:** November 17, 2008

FORM 5.00 MONITORING INFORMATION

Emission Unit ID/ APCD ID	Emission Unit/APCD Name	Monitored Parameter		Monitoring Frequency
		Parameter	Units	
CT1 & DB1	Combustion Turbine & Duct Burner Unit 1	NO_x	ppm	Continuous
CT1 & DB1	Combustion Turbine & Duct Burner Unit 1	CO	ppm	Continuous
CT2 & DB2	Combustion Turbine & Duct Burner Unit 2	NO_x	ppm	Continuous
CT2 & DB2	Combustion Turbine & Duct Burner Unit 2	CO	ppm	Continuous

Comments:

Facility Name: Live Oaks Power Plant **Date of Application:** November 17, 2008

FORM 7.00 – AIR MODELING INFORMATION: Stack Data

Stack ID	Emission Unit ID(s)	Stack Information			Dimensions of largest Structure Near Stack		Exit Gas Conditions at Maximum Emission Rate			
		Height Above Grade (ft)	Inside Diameter (ft)	Exhaust Direction	Height (ft)	Longest Side (ft)	Velocity (ft/sec)	Temperature (°F)	Flow Rate (acfm)	
									Average	Maximum
S001	CT1 & DB1	140	19.5	Towards the Sky	91	100	62.6	190.1	1,120,943	1,120,943
S002	CT2 & DB2	140	19.5	Towards the Sky	91	100	62.6	190.1	1,120,943	1,120,943
S003	FGH	40	1.5	Towards the Sky			21.0	713.0	4,514	4,514
COOL1-COOL10	COOL	45	28	Towards the Sky			23.2	109	1,450,000	1,450,000

NOTE: If emissions are not vented through a stack, describe point of discharge below and, if necessary, include an attachment. List the attachment in Form 1.00 *General Information*, Item 16.

Exhaust gas conditions for S001 and S002 are based on baseload operation at 59°F with duct-firing. See PSD Report.

Facility Name: Live Oaks Power Plant **Date of Application:** November 17, 2008

FORM 7.00 AIR MODELING INFORMATION: Chemicals Data

Chemical	Potential Emission Rate (lb/hr)	Toxicity	Reference	MSDS Attached
				☐
				☐
				☐
				☐
				☐
				☐
				☐
				☐
				☐
				☐
				☐
				☐
				☐
				☐
				☐
				☐
				☐
				☐
				☐
				☐
				☐
				☐
				☐
				☐
				☐
				☐
				☐
				☐
				☐
				☐
				☐
				☐

ATTACHMENT A

PSD REPORT

1.0 INTRODUCTION AND EXECUTIVE SUMMARY

1.1 Introduction

Live Oaks Company, LLC (Live Oaks), is proposing to construct and operate a combined-cycle power production facility with a nominal net electrical output of 600 megawatts (MW) in Glynn County, Georgia (Figure 1-1 and Figure 1-2). The facility is referred to as the Live Oaks Power Project (the Project). The Project is located approximately 5 miles west of I-95 on a 90-acre undeveloped parcel in the Sterling Industrial Park on Green Swamp Road. The site is zoned for General Industrial use, adjoins the Georgia Power West Brunswick/Highway 99 230/115 kilovolt (kV) substation, is bordered by a 115-kV/230-kV transmission easement to the west, a Norfolk Southern Railroad line to the east, and several industrial complexes to the south. The Project will interconnect to the Georgia Integrated Transmission System at the Georgia Power, West Brunswick-Highway 99 230 kV substation.

The Project will have a "2-on-1" combined cycle configuration and will consist of:

- Two 200-MW "F" Class combustion turbines (CTs) that will operate in combined cycle mode and will be fired by natural gas only;
- Two heat recovery steam generators (HRSGs) each equipped with a duct burner together with selective catalytic reduction (SCR) for control of nitrogen oxides (NO_x) and an oxidation catalyst for control of carbon monoxide (CO) and volatile organic compounds (VOCs);
- One steam turbine generator (STG) (approximately 200 MW); and
- Associated equipment.

The Project will consist of the power block and operations control center and directly associated facilities, including water treatment and storage facilities; facilities for general services and warehouse space; a mechanical draft cooling tower; an emergency diesel-fired generator; fuel gas heater; various pumps, including an emergency firewater pump; and a gas metering station.

The CT units will be Siemens SGT6-5000F models with dry low- NO_x (DLN) burners and fired by natural gas only. To further reduce NO_x emissions, SCR systems will be installed on these CTs. An oxidation catalyst system will be used to reduce CO and VOC emissions.

1.2 Prevention of Significant Deterioration Requirements

The Project will be a new air emission source in Glynn County. The U.S. Environmental Protection Agency (EPA) has implemented regulations requiring new source review (NSR) for new or modified sources that increase air emissions above certain threshold amounts for major sources. Because the major source threshold amounts will be exceeded by the proposed Project, the Project is subject to review under the Prevention of Significant Deterioration (PSD) regulations. PSD regulations are promulgated under Title 40, Part 52.21 of the Code of Federal Regulations (40 CFR 52.21) and implemented through delegation to the Georgia Department of Natural Resources, Environmental Protection Division (Georgia EPD). Georgia EPD has adopted by reference EPA PSD regulations [Chapter 391-3-1-.02 (7)].

The total potential emissions in tons per year (TPY) associated with this Project are presented as Table 1-1. Based on the emissions from the proposed Project, a PSD review is required for each of the following regulated pollutants:

- Sulfur dioxide (SO_2),
- Particulate matter (PM) as total suspended particulate matter (TSP),
- Particulate matter with aerodynamic diameter of 10 microns or less (PM_{10}),
- Fine particulate matter ($PM_{2.5}$),
- Nitrogen dioxide (NO_2),
- Carbon monoxide (CO),
- VOC (for ozone), and
- Sulfuric acid mist (SAM).

Glynn County has been designated as an attainment or unclassifiable area for all criteria pollutants. The County is also classified as a PSD Class II area for PM_{10}, SO_2, and NO_2; therefore, the NSR will follow PSD regulations pertaining to such designations.

Best available control technology (BACT) analyses were conducted for each pollutant with emissions greater than the EPA significance threshold. The proposed BACT to control NO_x emissions from the Project's two CTs operating in combined cycle mode is the use of DLN burners and SCR. The NO_x concentration will be limited to 2.5 parts per million (ppm), volume dry (ppmvd), corrected to 15-percent oxygen (O_2) including duct firing in the HRSG. The proposed BACTs for PM, PM_{10}, and

$PM_{2.5}$ are good combustion practices utilizing the DLN combustor and firing natural gas fuel. The proposed BACTs for SO_2 and SAM are the use of natural gas with low sulfur content. An oxidation catalyst system is proposed to be the BACT for CO and VOCs.

1.3 Summary of Results

Results from the analyses presented in this PSD Air Permit application lead to the following conclusions:

- The proposed BACT for each applicable pollutant provides the maximum degree of emissions reduction that is achievable when energy, environmental, and economic impacts and technical feasibility are considered.
- National and State Ambient Air Quality Standards (AAQS) will not be exceeded as a result of the operation of the Project.
- Applicable PSD increments will not be exceeded as a result of the operation of the Project.
- Non-criteria pollutants emitted from the Project will not adversely affect the public.
- Visibility impacts from the Project's plume on Class II and I areas are not anticipated to have a significant impairment to local visibility or regional haze.
- No effects on soils and vegetation are expected as a result of the operation of the Project.
- The operation of the Project is not expected to adversely affect population or economic growth in the area; thus, no additional secondary emissions or impacts are anticipated.

As substantiated in this application, the Project will be constructed and operated in compliance with all applicable state and federal rules, regulations and laws.

1.4 Air Permit Application Organization

The air permit application is divided into seven major sections.

- Section 2.0 presents a description of the facility, including air emissions and stack parameters.
- Section 3.0 provides a review of the PSD requirements applicable to the proposed Project.

- Section 4.0 includes the control technology review with discussions on BACT.
- Section 5.0 discusses the ambient air monitoring analysis (pre-construction monitoring) required by PSD regulations.
- Section 6.0 presents a summary of the air modeling approach and results used in assessing compliance of the proposed Project with AAQS, PSD increments, and good engineering practice (GEP) stack height regulations.
- Section 7.0 provides the additional impact analyses for soils, vegetation, and visibility.

TABLE 1-1
SUMMARY OF MAXIMUM ANNUAL POLLUTANT EMISSIONS FOR THE LIVE OAKS POWER PROJECT, GLYNN COUNTY, GEORGIA

Pollutant[a]	Maximum Project Emissions[b] (TPY)
Sulfur Dioxide (SO_2)	32.9
Total Particulate Matter (PM)	76.0
Particulate Matter <10 microns (PM_{10})	74.3
Fine Particulate Matter ($PM_{2.5}$)	70.6
Nitrogen Oxides (NO_X)	185.1
Carbon Monoxide (CO)	418.5
Volatile Organic Compounds (VOC)	132.5
Sulfuric Acid Mist (SAM)	6.8

Footnotes:

[a] PM_{10} emissions are used as a surrogate for $PM_{2.5}$ (except for the cooling tower). Note that PM, PM_{10}, and $PM_{2.5}$ emissions are not additive.

[b] Based on the Project operating in combined cycle mode with two combustion turbines (CTs) at baseload conditions firing natural gas at 59 degrees Fahrenheit (°F) ambient temperature. Emissions estimates include the CT-only operation for 2,546 hours, duct firing at a maximum heat input rate of 359 million British thermal units per hour (MMBtu/hr) (HHV) for 4,000 hours, startup and shutdown (SU/SD) operation including 18 cold starts, 63 warm starts, and 119 hot starts (total 200 SU/SD for 462 hours) and downtime between SU/SD operations for 1,752 hours. In addition, emissions estimates include the cooling tower, one fuel gas heater, an emergency generator,and a firewater pump. Other regulated pollutants will not be emitted, or are emitted in negligible amounts.

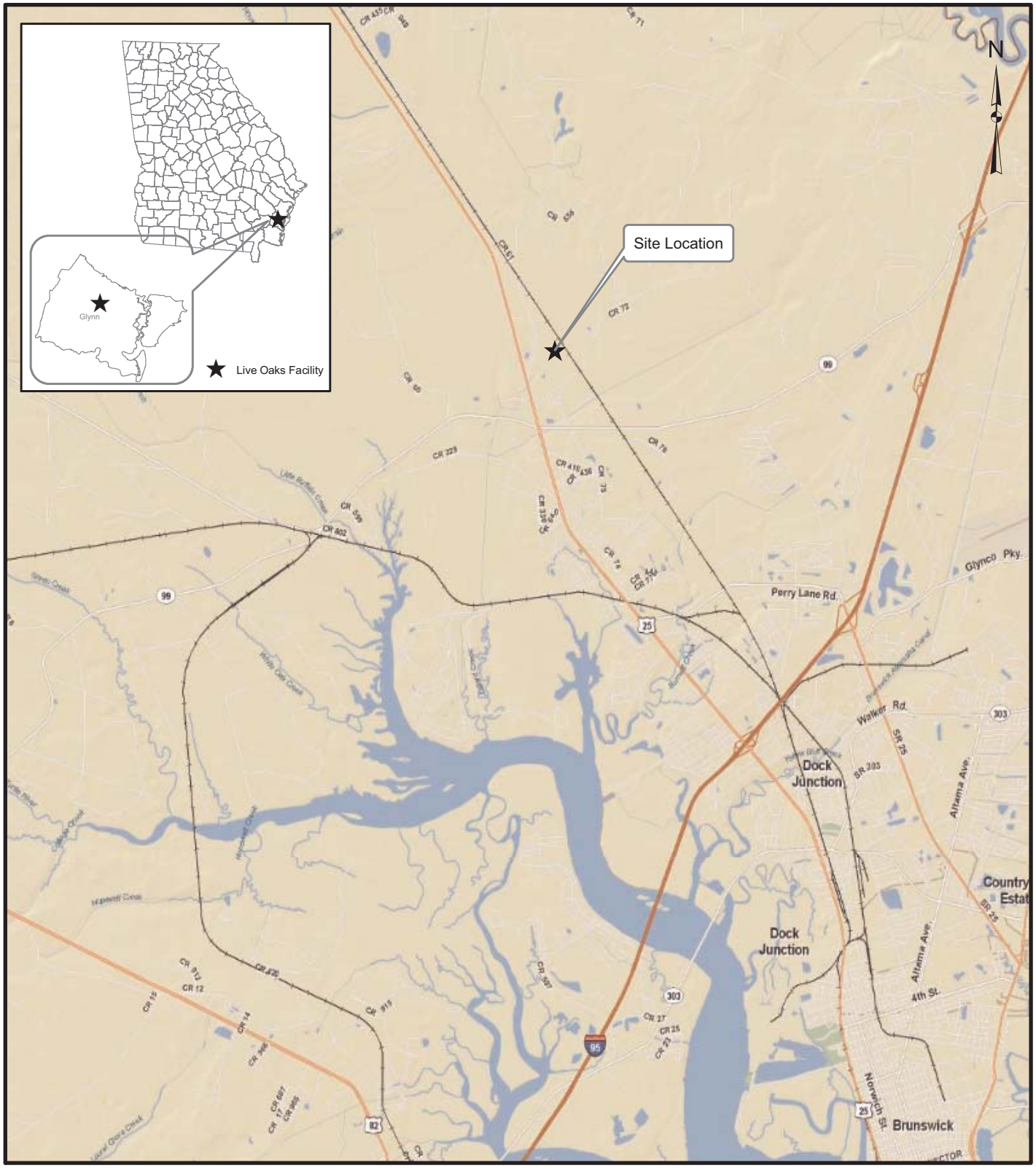

REFERENCE

1. Live Oaks Facility Location, Sithe Global, 2008
2. Background, ESRI, 2006

2,500 0 2,500

SCALE 1:100,000 METRES

Golder Associates
Gainesville, Florida

PROJECT No.	073-3618		
FILE No.	0733618B001	REV.	1

DATE	11/17/08
DESIGN	SKM
GIS	NRL
CHECK	SKM
REVIEW	SKM

TITLE

GENERAL LOCATION

PROJECT

LIVE OAKS COMPANY, LLC

FIGURE 1-1

Map Document: P:\GIS\PROJECTS\2007\073-3618_Live_Oaks\B_PSD\MapDocuments\0733618B001_Rev1.mxd / Modified 11/17/2008 3:33:32 PM / Plotted 11/17/2008 3:33:32 PM by rlamar

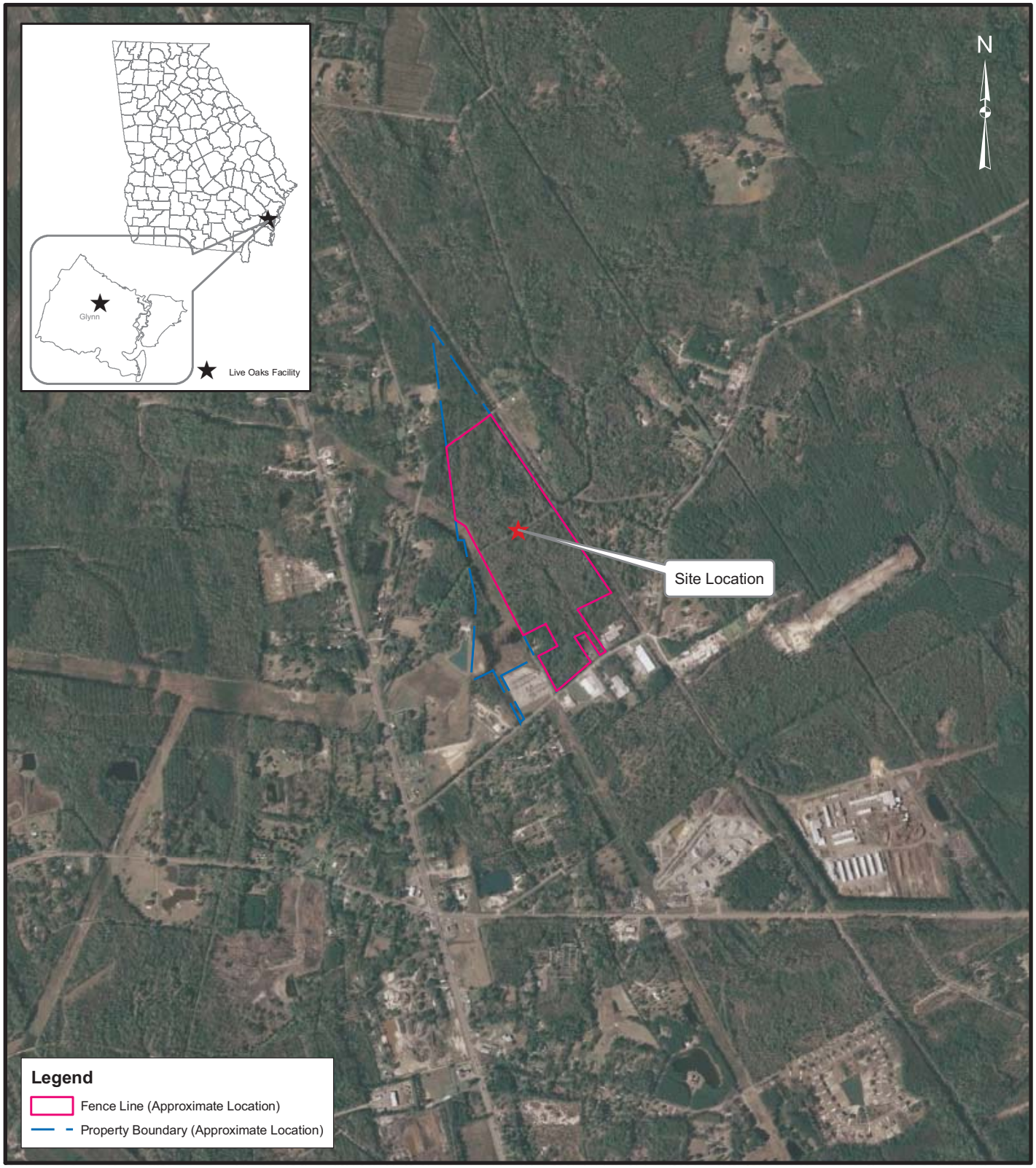

REFERENCE

1. Live Oaks Facility Location, Sithe Global, 2008
2. Imagery, ESRI Online, 2006

500 0 500
SCALE 1:20,000 METRES

Golder Associates
Gainesville, Florida

PROJECT No.	073-3618		
FILE No.	0733618B002	REV.	1

DATE	11/17/08
DESIGN	SKM
GIS	NRL
CHECK	SKM
REVIEW	SKM

TITLE

SITE LOCATION

PROJECT

LIVE OAKS COMPANY, LLC

FIGURE 1-2

Map Document: P:\GIS\PROJECTS\2007\073-3618_Live_Oaks\B_PSD\MapDocuments\0733618B002_Rev1.mxd / Modified 11/17/2008 3:34:21 PM / Plotted 11/17/2008 3:34:21 PM by rlamar

2.0 PROJECT DESCRIPTION

2.1 Site Description

The Project is located approximately 5 miles west of I-95 on a 90-acre parcel in the Sterling Industrial Park on Green Swamp Road. The site is zoned for General Industrial use, adjoins the Georgia Power West Brunswick/Highway 99 230/115 kV substation, is bordered by a 115-kV/230-kV transmission easement to the west, a Norfolk Southern Railroad line to the east, and several industrial complexes to the south. The Project will interconnect to the Georgia Integrated Transmission System at the Georgia Power, West Brunswick - Highway 99 230 kV substation.

The site elevation will be approximately 15 feet above mean sea level (ft-msl).

2.2 Power Plant

The Project will consist of two nominal 200-MW Siemens SGT6-5000F CTs that will operate in combined cycle mode, two HRSGs with two 359 MMBtu/hr high heating value (HHV) duct burners (one per HRSG), one nominal 200-MW STG, and associated equipment. The total electric power capacity of the Project will be approximately 600 MW (nominal net). The Project will consist of the power block and operations control center and directly associated facilities, including water treatment and storage facilities; facilities for general services and warehouse space; a mechanical draft cooling tower; an emergency diesel-fired generator; fuel gas heater; various pumps including an emergency firewater pump; and a gas metering station.

A CT is an internal combustion engine that operates with rotary motion to drive an electric generator to produce electricity. CTs are essentially composed of three major components: compressor, combustor, and power turbine. In the compressor section, ambient air is drawn in, compressed and directed to the combustor section where fuel is introduced, ignited, and burned. The rotary power is achieved by the expansion of the combustion gases through the power turbine. For this Project, the combustion process is based on lean premix staged combustion. For lean premix combustors, fuel and air are thoroughly mixed in an initial stage resulting in a uniform, lean, unburned fuel/air mixture that is delivered to a secondary stage where the combustion reaction takes place. Manufacturers use different types of fuel/air staging, including fuel staging, air staging, or both; however, the same staged, lean premix principle is applied. CTs using staged combustion are also referred to as DLN combustors.

Hot gases from the combustion section are diluted with additional air from the compressor section and directed to the power turbine section at very high temperatures. Energy from the hot exhaust gases, which expand in the power turbine section, is recovered in the form of shaft horsepower. More than 50-percent of the shaft horsepower is needed to drive the internal compressor and the balance of recovered shaft horsepower is available to drive an external load. The heat content of the exhaust gases exiting the turbine can be exhausted to the atmosphere without heat recovery (referred to as simple cycle mode) or directed to a HRSG to produce steam for a steam turbine (referred to as combined cycle mode). In combined cycle mode, the gas turbine drives an electric generator and the steam from the HRSG drives a steam turbine, which also drives an electric generator.

During periods of peak electrical demand, the duct burners in the HRSGs can be fired to add further heat energy to the gas turbine exhaust gases flowing through the boilers, increasing the production of steam to be sent to the steam turbine. Each duct burner will have a maximum heat input rate of 359 MMBtu/hr (HHV) and be fired by natural gas. The duct burners will be used when the Project is operating at or near baseload conditions. For permitting purposes, the duct burners are assumed to operate for 4,000 hour per year (hr/yr).

A portion of the steam from the HRSG can also be used for injection into the combustor section of the CTs to increase power out of the CTs. This type of operation is referred to as the steam injection power augmentation mode. The steam injection power augmentation mode is normally used during times of high ambient temperatures when power output of the CTs is reduced due to the lower density of the higher temperature CT inlet air. The steam injected into the CTs is exhausted as water vapor to the atmosphere as part of the HRSG flue gases.

Process flow diagrams of the facility operating at baseload in combined cycle mode at ambient temperatures of 20, 59, and 95 degrees Fahrenheit (°F) (with power augmentation and duct firing) are presented in Figures 2-1 through 2-3, respectively.

The Siemens SGT6-5000F CTs will have an evaporative cooler at the turbine air inlet that reduces the inlet air temperature and increases the efficiency, mass flow and power output. These coolers add water vapor to the exhaust from the CTs, but do not affect emissions of regulated pollutants.

The Project will be capable of continuous operation at baseload for up to 8,760 hr/yr and permitted at an annual capacity factor of 100-percent. However, the CTs typically will operate between 70 and 100-percent of load for an annual average capacity factor of approximately 40 to 60-percent. The

economic incentive is to dispatch the plant as near to 100-percent load, whenever possible. The CTs may be operated individually or in combination.

Natural gas will be transported to the site via pipeline and will be the exclusive fuel used for the CTs and the HRSG duct burners.

Air emissions controls will consist of state-of-the-art DLN burners and SCR. The DLN combustors for the Siemens SGT6-5000F CTs have premixed fuel zones plus a standard diffusion flame pilot burner for flame stability. Low NO_x levels are achieved by introducing fuel primarily to the pre-mix zones to create a very uniform temperature in the combustion zone. This also reduces the amount of fuel being combusted from the pilot nozzle. Steam injection will be used during some operating conditions for power augmentation. This is different than using steam injection in the combustion zone for standard combustors, which is used for NO_x control. In addition to DLN combustors, NO_x emission levels will be controlled with an SCR system that will reduce NO_x emissions from the CTs and duct burners to 2.5 ppm volume dry, corrected to 15-percent O_2.

The SCR reactor will be located in the HRSG to provide the proper operating temperature range for the required conversion efficiency and system economy. The catalyst will be provided in modules field installed into a structural steel reactor housing integral to the HRSG. NH_3 is carried by a diluent and injected into the exhaust gas upstream of the catalyst modules. NO_x emissions are reduced by a chemical reaction with the NH_3 in the presence of the catalyst.

The aqueous NH_3 handling system will include primary and standby diluent air blowers (each sized for 100-percent capacity), NH_3 flow control and measurement devices, an NH_3/air mixing chamber, distribution header(s) and an NH_3 injection grid (AIG). Overall control of the system will be handled by the distribution control system. The reactor housing will include an internal support structure for the catalyst modules, access manways and catalyst loading openings and instrument connections for monitoring catalyst performance.

The SO_2 and SAM emissions will be controlled by the use of natural gas, the cleanest-burning fossil fuel commercially available. Good combustion practices and the use of natural gas fuel will also minimize potential emissions of PM, PM_{10}, $PM_{2.5}$, and other pollutants (e.g., trace metals). The CO and VOC emissions will be reduced by an oxidation catalyst system. The oxidation catalyst system will be placed in the HRSG, before the SCR system. The engineering and environmental design of

the Project will optimize control of air emissions while minimizing economic, environmental, and energy impacts (see Section 4.0 for the BACT evaluation).

The Project will have one cooling tower comprising 10 cells. The cooling tower will be used to provide cool water to the condensing steam turbine. The tower will be a mechanical draft counter-flow design and will be equipped with high-efficiency drift eliminators. Drift eliminators use inertial separation caused by airflow direction changes to remove water droplets from the airstream exhausting from the cooling tower.

The Project will have one fuel gas heater, with a maximum heat input rate of 10 MMBtu/hr. The heater will be fired by natural gas. The fuel gas heater is required to assure the natural gas supplied to the CTs meets the condition specifications of the gas turbine manufacturer.

The Project will also have one 600-kW emergency generator and one 310 horsepower emergency firewater pump. The emergency generator and emergency firewater pump will be fired by low sulfur content distillate fuel oil. The emergency generator will be operated for up to 2 hours per week for readiness testing and maintenance and could operate up to about 500 hr/yr as required during emergencies. The emergency firewater pump has a total heat input of less than 3 MMBtu/hr. Both units will be fired with fuel oil with a maximum sulfur content of 0.05-percent.

2.3 Proposed Source Emissions and Stack Parameters

As discussed previously, the CTs will operate only in combined cycle mode and will typically operate from 70 to 100-percent of their full load capacity. At CT operating loads below 100-percent, the mass emissions of all criteria pollutants decrease as load decreases to approximately 70-percent of full load.

The estimated maximum hourly emissions and exhaust information representative of the advanced CT design operating at 100 and 70-percent load conditions for combined cycle mode are presented in Tables 2-1 and 2-2. The information in the tables is presented for one CT unit operation based on natural gas combustion for air inlet ambient temperatures of 20, 59, and 95°F. These temperatures represent the range of ambient temperatures that the CTs are most likely to experience. Although the annual average temperature for the Project site is about 67°F, annual emissions are estimated assuming an ambient temperature of 59°F, which represents conservatively higher annual emissions.

The data in the tables were derived from the data provided by Live Oaks and are based on vendor data (see Appendix A). The vendor data sheets also include operating scenarios with and without evaporative coolers in operation. The evaporative coolers will be used when ambient conditions permit. When the evaporative coolers are operating, the CTs combust more natural gas and generate more mass emissions of pollutants than when the coolers are not operating, because the mass flow of air passed through the volumetrically limited machines is increased. To provide a conservative estimate of maximum pollutant emissions, the maximum emissions assume that the evaporative coolers would be used when the CTs operate in power augmentation mode.

The estimated maximum hourly emissions and exhaust information when the HRSG is fired with supplemental heating from the duct burner are also presented in Table 2-1. These maximum hourly emissions are based on a duct burner with a maximum heat input rate of 359 MMBtu/hr (HHV).

The maximum potential annual emissions for the Project are presented in Table 2-3 for one and two CTs. The potential annual emissions are based on the 59°F ambient air condition since it represents a nominal average between the higher emission levels at the 20°F ambient condition (winter) and the 95°F ambient condition (summer). It also represents the temperature referenced in the new source performance standards (NSPS) for stationary combustion turbines (40 CFR Part 60, Subpart KKKK). The maximum emissions are presented for several operating scenarios that include the CTs operating at 100-percent with duct firing up to 4,000 hr/yr and at 70-percent load up to 500 hr/yr.

Table 2-3 also includes emissions during startups and shutdowns (SU/SD). Emissions concentrations for certain pollutants such as NO_x, CO, and VOC are higher during SU/SD than operations at normal operating conditions primarily due to lower combustion efficiency at lower loads. Higher SU/SD emissions are also due to the fact that the efficiency of the emissions control devices such as SCR and oxidation catalyst is dependent on temperature and until an optimum temperature is reached, the control devices are not fully functional.

Emissions estimates for NO_x, CO, and VOC during the SU/SD events were developed based on gas turbine vendor startup emissions data and typical pollution control device performance versus temperature. Three types of startups are considered – cold, warm, and hot, with vendor provided duration estimates of 215, 125, and 63 minutes, respectively. The duration of the shutdown event is provided as 41 minutes. A worst-case combination of 18 cold starts, 63 hot starts, and 119 warm starts are considered for the year (a total of 200 startups). A total of 200 shutdowns are also included

in the emissions calculation. As shown, different operating scenarios are analyzed with the maximum CT–only operating hours (8,760 hours) adjusted downward to account for SU/SD operating hours, the 4,000 hours of duct firing, the 500 hours of 70-percent load operation, and an estimate of the amount of down-time between shutdown and startups, which is assumed to be a total of 20-percent of the annual operation or 1,752 hours/year.

Excess emissions resulting from SU/SD and malfunction will be minimized by following best operational practices, operating air pollution control equipment in a manner consistent with good air pollution control practice, and minimizing the duration of excess emissions. These procedures are consistent with those procedures in Georgia EPD rules for excess emissions (Chapter 391-3-1-.02(a)7).

The Project will have a 10-cell mechanical draft cooling tower. Particulate matter in the form of drift will result from the operation of the tower. The tower will be equipped with high-efficiency drift eliminators that will reduce drift to 0.001-percent of the circulating water flow rate. Since the drift will contain dissolved solids, particulate matter will be formed when the drift aerosols evaporate in the atmosphere. Table 2-4 presents information on the cooling tower and potential PM, PM_{10}, and $PM_{2.5}$ emissions from the drift.

The emission estimates for the emergency generator and emergency diesel firewater pump are presented in Table 2-5 and Table 2-6 respectively. The emission estimates for the fuel gas heater is presented in Table 2-7.

The overall potential annual emissions for the Project including the CTs, cooling tower, fuel gas heaters, emergency generator, and diesel firewater pump are presented in Table 2-8.

Emission factors for hazardous air pollutants (HAPs) were evaluated based on the EPA's *Compilation of Air Pollutant Emission Factors, Volume 1: Stationary Point and Area Sources, Fifth Edition*, also known as AP-42, emission factors and the EPA Combustion Turbine Emissions Database. The HAP emissions from the CTs are based on emission factors from Chapter 3.1 of AP-42. Summaries of the emission factors and emissions for gas firing are presented in Appendix A. The use of AP-42 emission factors for these HAPs provides conservative estimates of emissions.

An evaluation of the HAP emissions from the Project indicates that emissions are less than 25 TPY for all HAPs and less than 10 TPY for any single HAP. As shown in Table A-5, the maximum total emissions of HAPs are estimated to be 9.4 TPY with maximum emissions of any single HAP at 3.8 TPY (i.e., for formaldehyde). Therefore, the requirements of 40 CFR 63.43 for a maximum achievable control technology are not applicable to the Project.

2.4 Site Layout, Structures, and Stack Sampling Facilities

A plot plan of the proposed facility is presented in Figure 2-4. The dimensions of the buildings and structures are presented in Section 6.0. Stack sampling facilities will be constructed in accordance to Georgia Rules for Air Quality Control, Chapter 391-3-1-.02 (3), Sampling. A profile of a combustion turbine and heat recovery steam generator is presented in Figure 2-5.

The plot plan shows facility property lines, major process equipment and structures, and all emission points. The entrance to the site will have security gates to control site access. The fenced property boundary is shown in the figure.

TABLE 2-1
STACK, OPERATING, AND EMISSIONS DATA FOR THE COMBUSTION TURBINES/HRSG AND DUCT BURNERS FOR COMBINED CYCLE, NATURAL GAS COMBUSTION, BASELOAD OPERATION LIVE OAKS POWER PROJECT, GLYNN COUNTY, GEORGIA

		Operating and Emission Data [a] for Ambient Temperature							
		CT/HRSG - Baseload				CT/HRSG & Duct Burner - Baseload			
		20 °F	59 °F	95 °F	95 °F	20 °F	59 °F	95 °F	95 °F
Parameter		**Case 1**	**Case 2**	**Case 3**	**Case 5**	**Case 19**	**Case 20**	**Case 21**	**Case 12**
Stack Data (ft)									
Height	ft	140	140	140	140	140	140	140	140
Diameter	ft	19.5	19.5	19.5	19.5	19.5	19.5	19.5	19.5
100 Percent Load									
Operating Data									
Temperature	°F	196	195	196	196	192	190	189	190
Velocity	ft/sec	68.0	62.7	57.2	61.8	67.9	62.6	57.0	61.6
Heat Input	MMBtu/hr (HHV)	2,193.0	1,990.0	1,798.0	1,984.0	2,502.8	2,334.5	2,156.7	2,296.0
Maximum Hourly Emissions per CT/HRSG (lb/hr)									
SO_2	lb/hr	5.0	4.5	4.1	4.5	5.7	5.3	4.9	5.2
$PM/PM_{10}/PM_{2.5}$ [b]	lb/hr	10.3	9.2	9.1	9.2	12.6	11.7	11.7	11.5
NO_x	lb/hr	20.5	18.6	16.8	18.6	23.3	21.7	20.1	21.4
CO	lb/hr	10.0	9.0	8.2	9.0	16.2	15.9	15.4	15.2
VOC (as methane)	lb/hr	2.9	2.6	2.3	2.6	18.4	19.8	20.2	18.2
Sulfuric Acid Mist	lb/hr	1.0	0.9	0.8	0.9	1.2	1.1	1.1	1.1
Maximum Hourly Emissions per CT/HRSG (lb/MMBtu)									
SO_2	lb/MMBtu	0.0023	0.0023	0.0023	0.0023	0.0023	0.0023	0.0023	0.0023
$PM/PM_{10}/PM_{2.5}$ [b]	lb/MMBtu	0.0047	0.0046	0.0050	0.0046	0.0050	0.0050	0.0054	0.0050
NO_x	lb/MMBtu	0.0093	0.0093	0.0093	0.0094	0.0093	0.0093	0.0093	0.0093
CO	lb/MMBtu	0.0046	0.0045	0.0046	0.0045	0.0065	0.0068	0.0071	0.0066
VOC (as methane)	lb/MMBtu	0.0013	0.0013	0.0013	0.0013	0.0073	0.0085	0.0094	0.0079
Sulfuric Acid Mist	lb/MMBtu	0.0004	0.0004	0.0004	0.0004	0.0005	0.0005	0.0005	0.0005

Footnotes:

[a] Refer to Appendix A for detailed information on basis of pollutant emission rates and operating data. Duct firing is assumed for 100% operating load. No duct firing is assumed for loads less than 100%.

[b] Front- and back-half emissions. 100-percent of PM_{10} is considered to be $PM_{2.5}$.

Source: SIEMENS Performance Data frm CH2M Hill, 2008; Golder Associates, 2008.

TABLE 2-2
STACK, OPERATING, AND EMISSION DATA FOR THE COMBUSTION TURBINES/HRSGS AND DUCT BURNERS FOR COMBINED CYCLE, NATURAL GAS COMBUSTION, 70% LOAD OPERATION LIVE OAKS POWER PROJECT, GLYNN COUNTY, GEORGIA

		Operating and Emission Data [a] for Ambient Temperature		
		CT/HRSG - 70% Load		
		20 °F	59 °F	95 °F
Parameter		**Case 16**	**Case 17**	**Case 18**
Stack Data (ft)				
Height	ft	140	140	140
Diameter	ft	19.5	19.5	19.5
100 Percent Load				
Operating Data				
Temperature	°F	187	188	190
Velocity	ft/sec	52.7	49.5	45.8
Heat Input	MMBtu/hr (HHV)	1,651.0	1,517.0	1,384.0
Maximum Hourly Emissions per CT/HRSG				
SO_2	lb/hr	3.7	3.4	3.1
$PM/PM_{10}/PM_{2.5}$ [b]	lb/hr	9.0	8.9	8.8
NO_x	lb/hr	15.4	14.2	12.9
CO	lb/hr	7.6	7.0	6.4
VOC (as methane)	lb/hr	2.2	2.0	1.8
Sulfuric Acid Mist	lb/hr	0.7	0.7	0.6
Maximum Hourly Emissions per CT/HRSG (lb/MMBtu)				
SO_2	lb/MMBtu	0.0023	0.0023	0.0023
$PM/PM_{10}/PM_{2.5}$ [b]	lb/MMBtu	0.0054	0.0059	0.0064
NO_x	lb/MMBtu	0.0093	0.0094	0.0093
CO	lb/MMBtu	0.0046	0.0046	0.0046
VOC (as methane)	lb/MMBtu	0.0013	0.0013	0.0013
Sulfuric Acid Mist	lb/MMBtu	0.0004	0.0004	0.0004

Footnotes:

[a] Refer to Appendix A for detailed information on basis of pollutant emission rates and operating data. Duct firing is assumed for 100% operating load. No duct firing is assumed for loads less than 100%.

[b] Front- and back-half emissions. 100-percent of PM_{10} is considered to be $PM_{2.5}$.

Source: SIEMENS Performance Data frm CH2M Hill, 2008; Golder Associates, 2008.

TABLE 2-3
SUMMARY OF THE MAXIMUM POTENTIAL HOURLY AND ANNUAL EMISSIONS FOR THE CT/HRSG/DB IN COMBINED CYCLE OPERATIONS
LIVE OAKS POWER PROJECT, GLYNN COUNTY, GEORGIA

	Steady-State Operation Maximum Hourly Emissions at 59 °F (lb/hr) [a]			Startup/Shutdown												Maximum Emissions (tons/year)			
				Cold Start			Warm Start			Hot Start			Shutdown			Operating Scenario	Operating Hours		
Fuel:	NG	NG	NG	Duration	Emission	No. of	Duration	Emission	No. of	Duration	Emission	No. of	Duration	Emission	No. of	CT Only, 100 % Load	6,546	2,546	2,046
Load:	100%	100% w/DB	70%	(min)	(lb/event)	Starts	(min)	(lb/event)	Starts	(min)	(lb/event)	Starts	(min)	(lb/event)	SD	CT+DB, 100 % Load	0	4,000	4,000
																CT Only, 70 % Load	0	0	500
																Cold Startup	65	65	65
																Warm Startup	131	131	131
																Hot Startup	129	129	129
																Shutdown	137	137	137
Pollutant																**TOTAL[c]**	**7,008**	**7,008**	**7,008**
One Combustion Turbine																			
SO_2	4.5	5.3	3.4	--	--	--	--	--	--	--	--	--	--	--	--		14.8	16.4	16.1
$PM/PM_{10}/PM_{2.5}$	9.2	11.7	8.9	--	--	--	--	--	--	--	--	--	--	--	--		30.1	35.2	35.1
NO_x	18.6	21.7	14.2	215.0	446.2	18	125.0	254.2	63	65.0	119.2	119	41.0	24.2	200		82.4	88.6	87.5
CO	9.0	15.9	7.0	215.0	3489.7	18	125.0	1836.7	63	65.0	933.6	119	41.0	184.6	200		192.7	206.5	206.0
VOC (as methane)	2.6	19.8	2.0	215.0	396.9	18	125.0	247.2	63	65.0	130.2	119	41.0	37.6	200		31.4	65.7	65.6
Sulfuric Acid Mist	0.9	1.1	0.7	--	--	--	--	--	--	--	--	--	--	--	--		2.9	3.4	3.4
HAPs[b]	1.06	1.09	--	--	--	--	--	--	--	--	--	--	--	--	--		4.6	4.7	--
Two Combustion Turbines																			
SO_2	9.0	10.6	6.9	--	--	--	--	--	--	--	--	--	--	--	--		29.6	32.7	32.2
$PM/PM_{10}/PM_{2.5}$	18.4	23.5	17.8	--	--	--	--	--	--	--	--	--	--	--	--		60.1	70.4	70.2
NO_x	37.2	43.4	28.4	215.0	892.4	18	125.0	508.4	63	65.0	238.4	119	41.0	48.4	200		164.8	177.3	175.1
CO	18.0	32	14	215.0	6979.4	18	125.0	3673.4	63	65.0	1867.2	119	41.0	369.2	200		385.5	413.0	412.0
VOC (as methane)	5.2	39.6	4.0	215.0	793.8	18	125.0	494.4	63	65.0	260.4	119	41.0	75.2	200		62.8	131.5	131.2
Sulfuric Acid Mist	1.8	2.3	1.3	--	--	--	--	--	--	--	--	--	--	--	--		5.8	6.8	6.7
HAPs	2.12	2.18	--	--	--	--	--	--	--	--	--	--	--	--	--		9.3	9.4	--

Footnotes:

[a] Based on 59 °F ambient inlet air temperature, see Tables 2-1 and 2-2.

[b] Based on HAPs emissions calculation in Table A-5 of Appendix A.

[c] Total hours include 1,752 hours/year of down-time prior to all startups.

Source: SIEMENS Performance Data frm CH2M Hill, 2008; Startup/Shutdown data from CH2M Hill, 2008; Golder Associates, 2008.

TABLE 2-4
PHYSICAL, PERFORMANCE, AND EMISSIONS DATA FOR THE MECHANICAL DRAFT COOLING TOWER
LIVE OAKS POWER PROJECT, GLYNN COUNTY, GEORGIA

Parameter	Typical Values[a]
Physical Data	
Number of Cells	10
Deck Dimensions (ft)	
Length	480
Width	48
Height	35
Stack Dimensions	
Height (ft)	45
Stack Top Effective Inner Diameter per cell (ft)	28
Effective Diameter, all cells (ft)	88.5
Performance Data	
Discharge Velocity (ft/min)	2,355
Circulating Water Flow Rate (CWFR) (gal/min)	140,000
Design Wet Bulb Temperature (°F)	77
Design Hot Water Temperature (°F)	109
Design Cold Water Temperature (°F)	89
Heat Rejected (MMBtu/hr)	1,397
Design Air Flow Rate per cell (acfm)	1,450,000
Liquid/Gas (Air Flow) (L/G) Ratio	1
Hours of Operation	8,760
Emission Data	
Drift Rate[b] (DR) (percent)	0.001
Total Dissolved Solids (TDS) Concentration[c] ,maximum (ppm)	1,739
PM Drift [d] (lb/hr)	1.22
(TPY)	5.3
PM_{10} Drift [d]	
PM_{10} Portion (percent) of PM Drift	68.6
PM_{10} Emissions (lb/hr)	0.84
(TPY)	3.7
$PM_{2.5}$ Drift [d]	
$PM_{2.5}$ Portion (percent) of PM Drift	0.22
$PM_{2.5}$ Emissions (lb/hr)	0.003
(TPY)	0.012

Footnotes:

[a] Typical cooling tower design for indicated conditions.

[b] Drift rate is the percent of circulating water.

[c] TDS assumed for modeling.

[d] $PM/PM_{10}/PM_{2.5}$ calculated based on Calculating Realistic PM_{10} Emissions from Cooling Towers, Joel Reisman and Gordon Frisbie. See Appendix A.

TABLE 2-5
PERFORMANCE, STACK PARAMETERS, AND EMISSIONS FOR THE EMERGENCY GENERATOR
LIVE OAKS POWER PROJECT, GLYNN COUNTY, GEORGIA

Parameter	Value
Performance	
Fuel	Diesel
Rating (kW)	600
Heat Input (MMBtu/hr-HHV)	6.30
Hourly Fuel Usage (gallons/hr)[a]	45.65
Annual Fuel Usage (gallons/yr)	22,826
Maximum Operation (hours/yr)[b]	500
Number of Units	1
Stack Parameters	
Diameter (ft)	0.5
Height (ft)	6
Temperature (°F)	770
Velocity (ft/sec)	83
Flow (acfm)	1,951
Emissions	
SO_2 -Basis (%S diesel) [c]	0.05%
(lb/hr)	0.33
(TPY)	0.08
NO_X - (g/kW-hr) [d]	6.4
(lb/hr)	8.47
(TPY)	2.12
CO - (g/kW-hr) [d]	3.5
(lb/hr)	4.63
(TPY)	1.16
VOC - (lb/MMBtu) [e]	0.35
(lb/hr)	2.21
(TPY)	0.55
$PM/PM_{10}/PM_{2.5}$ - (g/kW-hr) [d]	0.20
(lb/hr)	0.26
(TPY)	0.07

Footnote:

[a] Based on distillate fuel oil heat content of 138,000 Btu/gal (HHV).

[b] Maximum based on Georgia EPD regulation, Chapter 391-3-1-.03(6)(b) for exempt sources.

[c] Maximum sulfur content for distillate fuel oil.

[d] Based on NSPS Subpart IIII limit.

[e] Emission data for diesel-fired industrial engines, Table 3.3-1, AP-42, EPA 1996.

TABLE 2-6
PERFORMANCE, STACK PARAMETERS, AND EMISSIONS FOR THE DIESEL FIRE PUMP
LIVE OAKS POWER PROJECT, GLYNN COUNTY, GEORGIA

Parameter	Value
Performance	
Fuel	Diesel
Rating (hp)	310
Heat Input (MMBtu/hr-HHV)	2.43
Hourly Fuel Usage (gallons/hr)[a]	17.59
Annual Fuel Usage (gallons/yr)	8,794
Maximum Operation (hours/yr)[b]	500
Number of Units	1
Stack Parameters	
Diameter (ft)	0.5
Height (ft)	6
Temperature (°F)	770
Velocity (ft/sec)	62
Flow (acfm)	1,456
Emissions	
SO_2 -Basis (%S diesel) [c]	0.05%
(lb/hr)	0.13
(TPY)	0.03
NO_X - (g/hp-hr) [d]	3.0
(lb/hr)	2.05
(TPY)	0.51
CO - (g/hp-hr) [d]	2.6
(lb/hr)	1.78
(TPY)	0.44
VOC - (lb/MMBtu) [e]	0.35
(lb/hr)	0.85
(TPY)	0.21
$PM/PM_{10}/PM_{2.5}$ - (g/hp-hr) [d]	0.15
(lb/hr)	0.10
(TPY)	0.03

Footnote:

[a] Based on distillate fuel oil heat content of 138,000 Btu/gal (HHV).

[b] Maximum based on Georgia EPD regulation, Chapter 391-3-1-.03(6)(b) for exempt sources .

[c] Maximum sulfur content for distillate fuel oil.

[d] Based on NSPS Subpart IIII limit.

[e] Emission data for diesel-fired industrial engines, Table 3.3-1, AP-42, EPA 1996.

TABLE 2-7
PERFORMANCE, STACK PARAMETERS, AND EMISSIONS FOR FUEL GAS HEATER
LIVE OAKS POWER PROJECT, GLYNN COUNTY, GEORGIA

Parameter	Value
Performance	
Heat Input (MMBtu/hr-HHV)[a]	10.0
Fuel Usage (scf/hr-gas)[b]	9,792
Hours per Year	4,380
Maximum Fuel Usage (MMscf/yr)	42.89
Stack Parameters	
Diameter (ft)	1.5
Height (ft)	40
Temperature (°F)	713
Velocity (ft/sec)	21
Flow (acfm)	4,514
Emissions	
SO_2 -Basis (grains S/100 scf-gas)[c]	0.8
(lb/hr)	0.02
(TPY)	0.05
NO_X - (lb/MMBtu)	0.24
(lb/hr)[a]	2.36
(TPY)	5.17
CO - (lb/MMBtu)	0.18
(lb/hr)[a]	1.79
(TPY)	3.92
VOC - (lb/MMBtu)	0.01
(lb/hr)[a]	0.10
(TPY)	0.22
$PM/PM_{10}/PM_{2.5}$ - (lb/10^6 ft^3)[d]	7.6
(lb/hr)	0.07
(TPY)	0.16

Footnotes:

[a] Vendor information (GasTech).

[c] Based on natural gas heat content of 1,021.2 Btu/ft^3 (HHV).

[c] Maximum sulfur content of natural gas.

[d] Table 1.4-2, AP-42, EPA 1998; total PM (filterable + condensable).

TABLE 2-8
SUMMARY OF THE MAXIMUM POTENTIAL ANNUAL EMISSIONS FOR COMPARISON TO THE PSD SIGNIFICANT EMISSIONS RATE
LIVE OAKS POWER PROJECT, GLYNN COUNTY, GEORGIA

	Annual Emissions (TPY)						PSD	
Pollutant	2 CT/HRSG with Duct Burners	Cooling Tower	Emergency Generator	Fire Pump	Natural Gas Heater	TOTAL	Significant Emission Rate (TPY)	PSD Review Required?
SO_2	32.7	NA	0.08	0.03	0.05	32.9	40	No
PM	70.4	5.3	0.07	0.03	0.16	76.0	25	Yes
PM_{10}	70.4	3.7	0.07	0.03	0.16	74.3	15	Yes
$PM_{2.5}$	70.4	0.01	0.07	0.03	0.16	70.6	10	Yes
NO_X	177.3	NA	2.1	0.51	5.2	185.1	40	Yes
CO	413.0	NA	1.2	0.44	3.9	418.5	100	Yes
VOC	131.5	NA	0.55	0.21	0.22	132.5	40	Yes
SAM	6.8	NA	Neg	Neg	Neg	6.8	7	No

Source: Golder, 2008.

NA - Not Applicable.
Neg. - Negligible.

BASELOAD OPERATION
AMBIENT TEMPERATURE OF 20°F

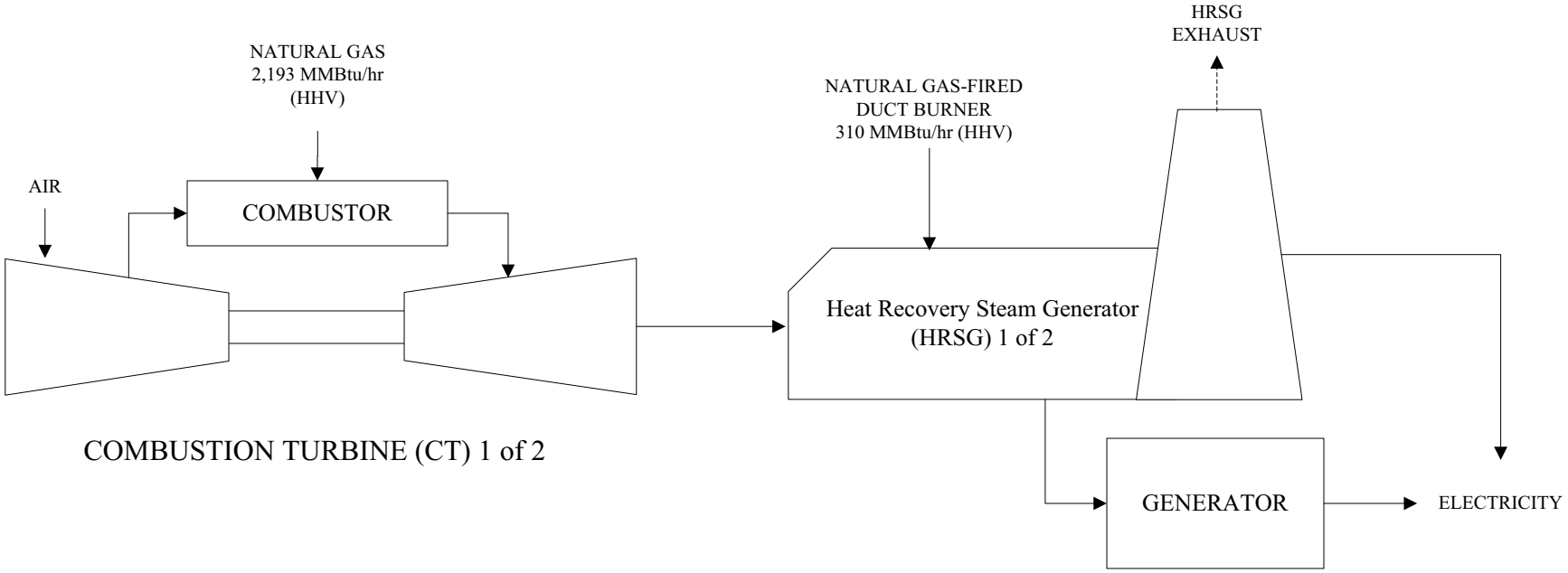

Natural Gas (without duct firing)	Natural Gas (with duct firing)
1,219,358 acfm	1,217,201 acfm
68.0 ft/sec	67.9 ft/sec
196.4°F	192.3°F

Figure 2-1. Process Flow Diagram for Each CT/HRSG Train
Baseload Operation, Turbine Inlet Temperature of 20°F
Live Oaks Company, LLC, Glynn County, Georgia
Final Figure 2.1-2.3
Source: Golder, 2008.

Process Flow Legend
Solid/Liquid
Gas
Steam

Golder Associates

BASELOAD OPERATION
AMBIENT TEMPERATURE OF 59°F

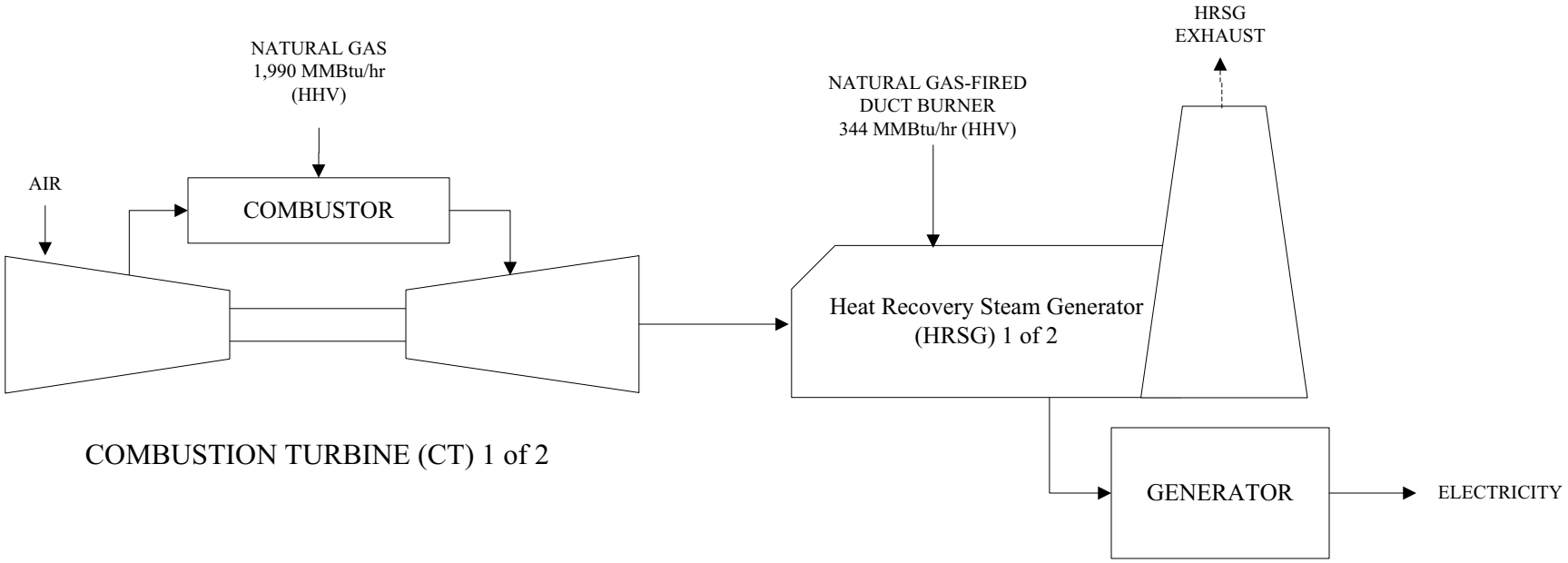

Natural Gas (without duct firing)
1,123,896 acfm
62.7 ft/sec
195.5°F

Natural Gas (with duct firing)
1,120,943 acfm
62.6 ft/sec
190.1°F

Figure 2-2. Process Flow Diagram for Each CT/HRSG Train
Baseload Operation, Turbine Inlet Temperature of 59°F
Live Oaks Company, LLC, Glynn County, Georgia
Final Figure 2.1-2.3
Source: Golder, 2008.

Process Flow Legend
Solid/Liquid
Gas
Steam

Golder Associates

BASELOAD OPERATION WITH EVAPORATIVE COOLER AND POWER AUGMENTATION
AMBIENT TEMPERATURE OF 95°F

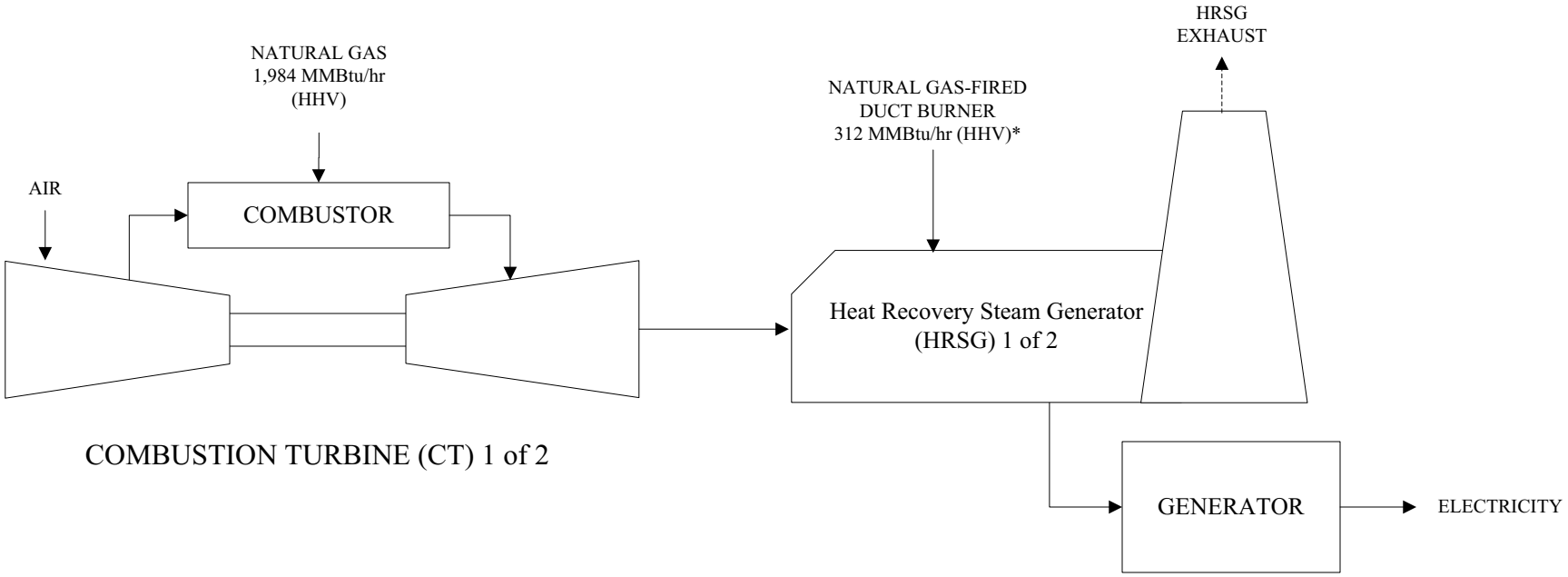

Natural Gas
(with evaporative cooler and power augmentation,
without duct firing)
1,108,001 acfm
61.8 ft/sec
195.6°F

Natural Gas
(with duct firing, evaporative cooler,
and power augmentation)
1,104,225 acfm
61.6 ft/sec
190.1°F

* Duct firing is 359 MMBtu/hr (HHV) with evaporative cooler and power augmentation

Figure 2-3. Process Flow Diagram for Each CT/HRSG Train
Baseload Operation - Power Augmentation, Turbine Inlet Temperature of 95°F
Live Oaks Company, LLC, Glynn County, Georgia
Final Figure 2.1-2.3
Source: Golder, 2008.

Process Flow Legend
Solid/Liquid
Gas
Steam

Golder Associates

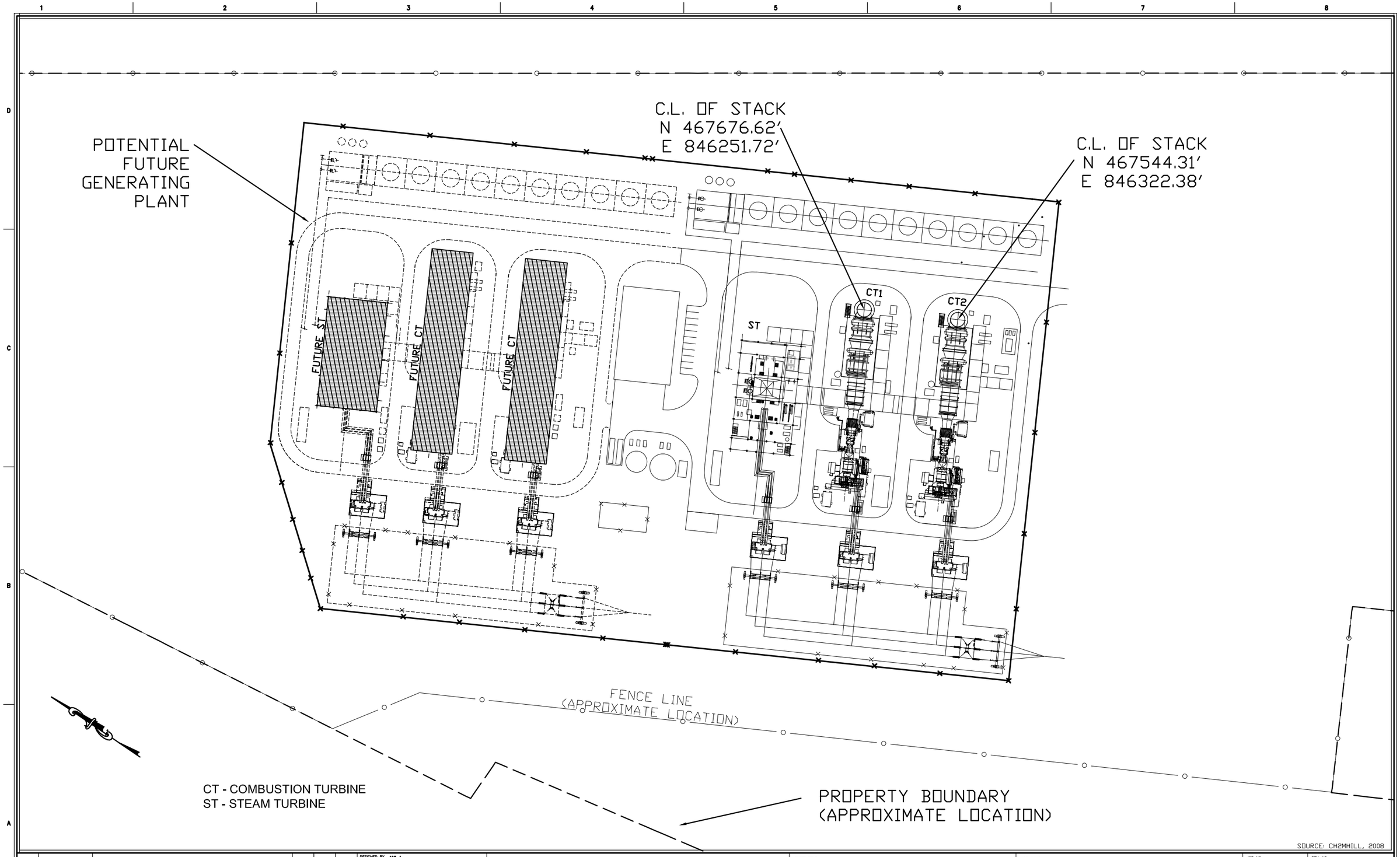

NO	DATE	REVISION	BY	CK.	APPR.
B	09/05/2008	MINOR CORRECTIONS	WLJ		
A	09/04/2008	INITIAL ISSUE	WLJ		

DESIGNED BY WLJ
CHECKED BY SKM
APPR. BY
CLIENT APPR.

\\LIBERTY\proj\00070056\COMMON\Logos\CH2MHILL\CH2M_low_resolution.jpg

Atlanta, Georgia

SHEET TITLE: FACILITY PLOT PLAN

JOB NAME: LIVE OAKS COMPANY, LLC

JOB NO. 367507
FILE NO. 0733618B003 Rev1
SCALE 1"=138'-0"
REV. NO. B
DWG. NO. FIGURE 2-4

LGAD_3, ANSI D, 22 x 34 in.

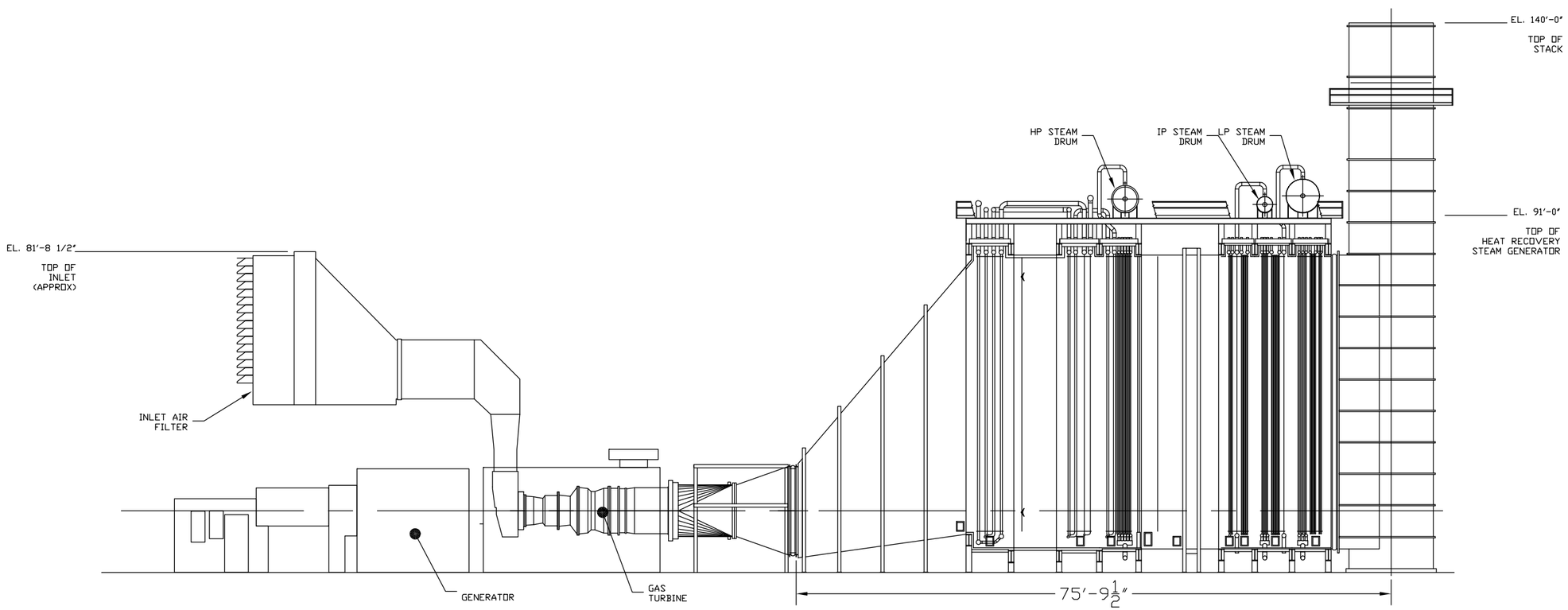

TYPICAL CTG SOUTH ELEVATION

SCALE: AS SHOWN

SOURCE: CH2MHILL, 2008

NO	DATE	REVISION	BY	CK.	APPR.
B	09/05/2008	MINOR CORRECTIONS	WLJ		
A	09/04/2008	INITIAL ISSUE	WLJ		

DESIGNED BY WLJ
CHECKED BY SKM
APPR. BY
CLIENT APPR.

\\LIBERTY\proj\00070056\COMMON\Logos\CH2MHILL\CH2M_low_resolution.jpg

Atlanta, Georgia

SHEET TITLE
PROFIILE OF COMBUSTION TURBINE AND HEAT RECOVERY STEAM GENERATOR

JOB NAME
LIVE OAKS COMPANY, LLC

JOB NO. 367507
FILENAME 0733618B004 Rev2
SCALE AS SHOWN
REV. NO. B
DWG. NO. FIGURE 2–5

LGAD_3, ANSI D, 22 x 34 in.

3.0 AIR QUALITY REVIEW REQUIREMENTS AND APPLICABILITY

Federal and state air regulatory requirements for a new source of air pollution are discussed in Sections 3.1 to 3.3. The applicability of these regulations to the proposed Project is presented in Section 3.4. These regulations must be satisfied before the proposed Project can begin construction.

3.1 National and State AAQS

The existing applicable National and Georgia AAQS are presented in Table 3-1. Primary National Ambient Air Quality Standards (NAAQS) were promulgated to protect the public health and secondary NAAQS were promulgated to protect the public welfare from any known or anticipated adverse effects associated with the presence of pollutants in the ambient air. Areas of the country in violation of NAAQS are designated as nonattainment areas, and new sources to be located in or near these areas may be subject to more stringent air permitting requirements.

3.2 PSD Requirements

3.2.1 General Requirements

Under federal and State of Georgia PSD review requirements, all major new or modified sources of air pollutants regulated under the Clean Air Act (CAA) must be reviewed and a pre-construction permit issued. Georgia's State Implementation Plan, which contains PSD regulations, has been approved by the EPA. Therefore, PSD approval authority has been granted to Georgia EPD.

A "major facility" is defined as any one of 28 named source categories that have the potential to emit 100 TPY or more or any other stationary facility that has the potential to emit 250 TPY or more of any pollutant regulated under the CAA. "Potential to emit" means the capability, at maximum design capacity, to emit a pollutant after the application of control equipment. Once a new source is determined to be a "major facility" for a particular pollutant, any pollutant emitted in amounts greater than the PSD significant emission rates is subject to PSD review. The PSD significant emission rates are presented in Table 3-2.

EPA regulations identify certain increases above an air quality baseline concentration level of SO_2, PM_{10}, and NO_2 concentrations that would constitute significant deterioration. The EPA Class designations and allowable PSD increments are presented in Table 3-1. The magnitude of the allowable increment depends on the classification of the area in which a new source (or modification)

will be located or have an impact. Two classifications are designated based on criteria established in the CAA amendments. Congress authorized EPA to classify areas as Class I (international parks, national wilderness areas, and memorial parks larger than 5,000 acres and national parks larger than 6,000 acres) or as Class II (all areas not designated as Class I). No Class III areas, which would be allowed greater deterioration than Class II areas, were designated. The State of Georgia has adopted the EPA Class designations and allowable PSD increments for SO_2, PM_{10}, and NO_2 increments.

PSD review is used to determine whether significant air quality deterioration will result from the new or modified facility. Federal PSD requirements are contained in 40 CFR 52.21, Prevention of Significant Deterioration of Air Quality. The Georgia EPD has adopted by reference EPA PSD regulations in Chapter 391-3-1-.02(7). Major facilities are required to undergo the following analysis related to PSD for each pollutant emitted in significant amounts:

1. Control technology review;
2. Source impact analysis;
3. Air quality analysis (monitoring);
4. Source information; and
5. Additional impact analyses.

In addition to these analyses, a new facility also must be reviewed with respect to GEP stack height regulations. Discussions concerning each of these requirements are presented in the following sections.

3.2.2 Control Technology Review

The control technology review requirements of the federal and state PSD regulations require that all applicable federal and state emission-limiting standards be met, and that BACT be applied to control emissions from the source. The BACT requirements are applicable to all regulated pollutants for which the increase in emissions from the facility exceeds the significant emission rate (see Table 3-2).

BACT is defined in 40 CFR 52.21 (b)(12), as:

> An emissions limitation (including a visible emission standard) based on the maximum degree of reduction of each pollutant subject to regulation under the Act, which would be emitted by any proposed major stationary source or major modification which the Administrator, on a case-by-case basis, taking into account energy, environmental, and economic impacts, and other costs, determines is achievable through application of production processes and available methods,

> systems, and techniques (including fuel cleaning or treatment or innovative fuel combustion techniques) for control of such pollutant. In no event shall application of best available control technology result in emissions of any pollutant, which would exceed the emissions allowed by any applicable standard under 40 CFR Parts 60 and 61. If the Administrator determines that technological or economic limitations on the application of measurement methodology to a particular part of a source or facility would make the imposition of an emission standard infeasible, a design, equipment, work practice, operational standard or combination thereof, may be prescribed instead to satisfy the requirement for the application of BACT. Such standard shall, to the degree possible, set forth the emissions reductions achievable by implementation of such design, equipment, work practice, or operation and shall provide for compliance by means, which achieve equivalent results.

BACT was promulgated within the framework of the PSD requirements in the 1977 amendments of the CAA [Public Law 95-95; Part C, Section 165(a)(4)]. The primary purpose of BACT is to optimize consumption of PSD air quality increments and thereby enlarge the potential for future economic growth without significantly degrading air quality[1]. Guidelines for the evaluation of BACT can be found in EPA's *Guidelines for Determining Best Available Control Technology (BACT)*[2] and in the *PSD Workshop Manual*[3]. These guidelines were promulgated by EPA to provide a consistent approach to BACT and to ensure that the impacts of alternative emission control systems are measured by the same set of parameters. In addition, through implementation of these guidelines, BACT in one area may not be identical to BACT in another area. According to EPA (1980), "BACT analyses for the same types of emissions unit and the same pollutants in different locations or situations may determine that different control strategies should be applied to the different sites, depending on site-specific factors. Therefore, BACT analyses must be conducted on a case-by-case basis."

The BACT requirements are intended to ensure that the control systems incorporated in the design of a proposed facility reflect the latest in control technologies used in a particular industry and take into consideration existing and future air quality in the vicinity of the proposed facility. BACT must, as a minimum, demonstrate compliance with NSPS for a source (if applicable). An evaluation of the air pollution control techniques and systems, including a cost-benefit analysis of alternative control technologies capable of achieving a higher degree of emission reduction than the proposed control technology, is required. The cost-benefit analysis requires the documentation of the materials, energy, and economic penalties associated with the proposed and alternative control systems, as well

[1] EPA, 1978; 1980.
[2] EPA, 1978.
[3] EPA, 1980.

as the environmental benefits derived from these systems. A decision on BACT is to be based on sound judgment, balancing environmental benefits with energy, economic, and other impacts[4].

Historically, a "bottom-up" approach consistent with the BACT Guidelines and PSD Workshop Manual has been used. With this approach, an initial control level, which is usually NSPS, is evaluated against successively more stringent controls until a BACT level is selected. However, EPA developed a concern that the bottom-up approach was not providing the level of BACT decisions originally intended. As a result, in December 1987, the EPA Assistant Administrator for Air and Radiation mandated changes in the implementation of the PSD program, including the adoption of a new "top-down" approach to BACT decision making.

The top-down BACT approach essentially starts with the most stringent (or top) technology and emissions limit that have been applied elsewhere to the same or a similar source category. The applicant must next provide a basis for rejecting this technology in favor of the next most stringent technology or propose to use it. Rejection of control alternatives may be based on technical or economic infeasibility. Such decisions are made on the basis of physical differences (e.g., fuel type), location differences (e.g., availability of water), or significant differences that may exist in the environmental, economic, or energy impacts. The differences between the proposed facility and the facility on which the control technique was applied previously must be justified.

3.2.3 Source Impact Analysis

A source impact analysis must be performed for a proposed major source subject to PSD review for each pollutant for which the increase in emissions exceeds the significant emission rate (Table 3-2). The PSD regulations specifically provide for the use of atmospheric dispersion models in performing impact analyses, estimating baseline and future air quality levels, and determining compliance with AAQS and allowable PSD increments. Designated EPA models normally must be used in performing the impact analysis. Specific applications for other than EPA-approved models require EPA's consultation and prior approval.[5]

To address compliance with AAQS and PSD Class II increments, a source impact analysis must be performed for the criteria pollutants. This analysis may be limited to the new source alone if the new source's impacts are less than the EPA significant impact levels presented in Table 3-1. The

[4] Guidelines for Determining Best Available Control Technology (BACT), EPA, 1978.
[5] Guidance for the use and application of dispersion models is presented in the EPA publication *Guideline on Air Quality Models* (EPA, 1980).

significant impact levels are threshold levels that are used to determine the level of air impact analyses needed for the Project. If the new source's impacts are predicted to be less than significant, then the source's impacts are assumed not to have a significant adverse affect on air quality and additional modeling with other sources is not required. However, if the source's impacts are predicted to be greater than the significant impact levels, additional modeling, including other emission sources, is required in order to demonstrate compliance with AAQS and PSD increments.

EPA has issued guidance related to significant impact levels for Class I areas, as shown in Table 3-1. Although these levels have not been officially promulgated as part of the PSD review process and may not be binding for States in performing PSD reviews, the levels serve as a guideline in assessing a source's impact in a Class I area. The EPA action to incorporate Class I significant impact levels into the PSD process is part of implementing the NSR regulations. Because the process of developing the regulations will be lengthy, EPA believes that the guidance concerning the significant impact levels is appropriate to assist States in implementing the PSD permit process.

Various lengths of record for meteorological data can be used for impact analysis. A 5-year period is normally used with corresponding evaluation of highest, second-highest short-term concentrations for comparison to AAQS or PSD increments. The meteorological data are selected based on an evaluation of measured weather data from a nearby weather station that represents weather conditions at the Project site. The criteria used in this evaluation include determining the distance of the Project site to the weather station; comparing topographical and land use features between the locations; and determining availability of necessary weather parameters. The selection of the weather data is normally discussed with and approved by the regulatory agency reviewing the air permit application prior to initiating air modeling.

The term "highest, second-highest" (HSH) refers to the highest of the second-highest concentrations at all receptors (i.e., the highest concentration at each receptor is discarded). The second-highest concentration is important because short-term AAQS specify that the standard should not be exceeded at any location more than once a year. If fewer than 5 years of meteorological data are used in the modeling analysis, the highest concentration at each receptor normally must be used for comparison to air quality standards.

The Georgia EPD has also adopted an air toxics policy. Air quality impacts for toxic air pollutants emitted by the Project will be assessed by the Georgia EPD procedures in *Guideline for Ambient*

Impact Assessment of Toxic Air Pollutant Emissions (Revised June 21, 1998). This policy requires atmospheric dispersion modeling for all non-criteria pollutants for which a threshold limit value or unit risk factor has been developed. The Georgia EPD has established acceptable ambient concentration (AAC) levels that are annual and/or 24-hour average concentrations not to be exceeded by the proposed source.

3.2.4 Air Quality Monitoring Requirements

In accordance with requirements of 40 CFR 52.21(m), any application for a PSD permit must contain an analysis of continuous ambient air quality data in the area affected by the proposed major stationary facility or major modification. For a new major facility, the affected pollutants are those that the facility potentially would emit in significant amounts. For a major modification, the pollutants are those for which the net emissions increase exceeds the significant emission rate (refer to Table 3-2 and Table 3-3).

Ambient air monitoring for a period of up to 1 year generally is appropriate to satisfy the PSD monitoring requirements. A minimum of 4 months of data are required. Existing data from the vicinity of the proposed source may be used if the data meet certain quality assurance requirements; otherwise, additional data may need to be gathered.[6]

The regulations include an exemption that excludes or limits the pollutants for which an air quality analysis must be conducted. This exemption states that Georgia EPD may exempt a proposed major stationary facility or major modification from the monitoring requirements with respect to a particular pollutant if the emissions increase of the pollutant from the facility or modification would cause, in any area, air quality impacts less than the *de minimis* levels presented in Table 3-2.

3.2.5 Source Information/Good Engineering Practice Stack Height

Source information must be provided to adequately describe the proposed Project. The general type of information required for this Project is presented in Section 2.0.

The 1977 CAA Amendments require that the degree of emission limitation required for control of any pollutant not be affected by a stack height that exceeds GEP or any other dispersion technique. On July 8, 1985, EPA promulgated final stack height regulations (EPA, 1985a). The Georgia EPD

[6] Guidance in designing a PSD monitoring network is provided in EPA's *Ambient Monitoring Guidelines for Prevention of Significant Deterioration* (EPA, 1987a).

[Chapter 391-3-1.02(7)(b)4] has adopted identical regulations. GEP stack height is defined as the highest of:

1. 65 meters (m); or
2. A height established by applying the formula:

$$Hg = H + 1.5L$$

where: Hg = GEP stack height,

H = Height of the structure or nearby structure, and

L = Lesser dimension (height or projected width) of nearby structure(s); or

3. A height demonstrated by a fluid model or field study.

> "Nearby" is defined as a distance up to five times the lesser of the height or width dimensions of a structure or terrain feature, but not greater than 0.8 kilometer (km). Although GEP stack height regulations require that the stack height used in modeling for determining compliance with AAQS and PSD increments not exceed the GEP stack height, the actual stack height may be greater.

The stack height regulations also allow increased GEP stack height beyond that resulting from the above formula in cases where plume impaction occurs. Plume impaction is defined as concentrations measured or predicted to occur when the plume interacts with elevated terrain. Elevated terrain is defined as terrain that exceeds the height calculated by the GEP stack height formula.

3.2.6 Additional Impact Analysis

In addition to air quality impact analyses, federal and State of Georgia PSD regulations require analyses of the impairment to visibility and the impacts on soils and vegetation that would occur as a result of the proposed source [40 CFR 52.21(o)]. These analyses are to be conducted primarily for PSD Class I areas. Impacts as a result of general commercial, residential, industrial, and other growth associated with the source also must be addressed. These analyses are required for each pollutant emitted in significant amounts (Table 3-2).

3.3 Emission Standards

3.3.1 New Source Performance Standards

The NSPS are a set of national emission standards that apply to specific categories of new sources. As stated in the CAA Amendments of 1977, these standards "shall reflect the degree of emission limitation and the percentage reduction achievable through application of the best technological

system of continuous emission reduction the Administrator determines has been adequately demonstrated."

The proposed Project will be subject to one or more NSPS.

3.3.1.1 Combustion Turbine and Duct Burner

The applicable NSPS for the Combustion Turbines and duct burners is 40 CFR 60, Subpart KKKK, Standards of Performance for Stationary Combustion Turbines. The Subpart KKKK requirements supersede the 40 CFR 60, Subpart GG requirements for CTs that will commence construction after February 18, 2005 and apply to units with a maximum heat input capacity of 10 MMBtu/hr or greater. Subpart KKKK also applies to emissions from any associated HRSG and duct burners and supersedes the requirements of 40 CFR 60, Subparts Da, Db, and Dc. For natural gas-fired CTs greater than 30 MW, NO_x emissions are limited to 15 ppm corrected to 15-percent O_2 or 0.43 pound per megawatt hour (lb/MW-hr). For only natural gas-fired CTs located in the continental USA, SO_2 emissions are limited to 0.90 lb/MW-hr gross output or 0.060 lb/MMBtu heat input.

In addition to emission limitations, the Project will be subject to the General Provisions in 40 CFR 60, Subpart A, including, but not limited to the following requirements for notification, record keeping, and performance testing:

40 CFR 60.7 – Notification and Record Keeping

(a)(1) Notification of the date of construction - within 30 days after such date.

(a)(3) Notification of actual date of initial startup - within 15 days after such date.

(a)(5) Notification of date which demonstrates commencement of the continuous emissions monitoring (CEM) system – not less than 30 days prior to date.

(b) Maintain records of the startup, shutdown, and malfunctions.

(c) Excess emissions reports - by the 30th day following the end of the each six-month period. (Required even if no excess emissions occur.)

(f) Maintain a file of all measurements for 2 years.

40 CFR 60.8 – Performance Tests

(a) Must be performed within 60 days after achieving maximum production rate, but no later than 180 days after initial startup.

(c) Emission limits shall not apply during periods of startup, shutdown, and malfunction.

(d) Notification of performance tests at least 30 days prior to them occurring.

There are many other additional requirements within Subpart KKKK that apply to different types of CT operations. Below is a list of the requirements and exemptions that would specifically apply to the CT operations. These are in addition to the Subpart KKKK requirements applicable to all CT operations.

40 CFR 60.4340 – Monitoring for NO_x

(b) *How to demonstrate continuous compliance for NO_x if water or steam injection is not used* – Owner or operator may install, calibrate, maintain and operate a continuous emission monitoring (CEM) as described in 40 CFR 60.4335(b) and 40 CFR 60.4345 to demonstrate continuous compliance.

40 CFR 60.4365 – Monitoring for SO_2

NSPS requires monitoring the fuel sulfur content. However, the owner or operator can be exempt from the sulfur content monitoring and may elect not to monitor the total sulfur content of the fuel combusted in the turbine, if the fuel is demonstrated not to exceed potential sulfur emissions of 0.06 lb SO_2/MMBtu heat input for units located in the continental USA. The fuel quality characteristics in a current, valid purchase contract, tariff sheet or transportation contract for the fuel can be provided that shows the maximum total sulfur content is 20 grains/100 SCF or less.

40 CFR 60.4350 – Excess Emissions

(h) For combined cycle and combined heat and power units with heat recovery, such as the Projetc's CTs, the calculated hourly average emission rates as described in 40 CFR 60.4350(f) are used to assess excess emissions on a 30-operating day rolling average basis. Excess emissions for NO_x are defined in 40 CFR 60.4380(b)(1). Excess emissions for SO_2 are defined in 40 CFR 60.4385(a).

40 CFR 60.4400 – Performance Tests for NO_x

(a) Initial and subsequent performance tests for NO_x shall be conducted on an annual basis and no more than 14 calendar months following the previous performance test. EPA Methods 7E or 20 are used to measure NO_x concentration in parts-per-million for units complying with output based standards. EPA Method 19 is used to calculate NO_x emission rates in lb/MMBtu.

40 CFR 60.4415 – Performance Tests for SO_2

(a) Initial and subsequent performance tests for SO_2 shall be conducted on an annual basis and no more than 14 calendar months following the previous performance test. Performance tests can be conducted by choosing to periodically determine the sulfur content of natural gas. ASTM Method D5287 is followed for collecting representative fuel samples of natural gas and ASTM Method D1072, or alternatively D3246, D4084, D4468, D4810, D6228, or D6667 can be used to analyze the samples. Alternately, a

performance test can be conducted by measuring SO_2 concentration using EPA Methods 6, 6C, 8, or 20.

3.3.1.2 Fuel Heater

The applicable NSPS for the fuel heater is 40 CFR Part 60, Subpart Dc, Standards of Performance for Small Industrial-Commercial-Institutional Steam Generating Units. This subpart applies to a steam generating unit that has a maximum design heat input capacity of 100 MMBtu/hr (HHV) or less, but greater than or equal to 10 MMBtu/hr. For natural gas-fired units, no pollutant emission limits are specified in the NSPS.

3.3.1.3 Emergency Engines

The applicable NSPS for new stationary internal combustion engines is 40 CFR Part 60, Subpart IIII, Standards of Performance for Stationary Compression Ignition Internal Combustion Engines (CI ICE).

This subpart applies to owners and operators of stationary CI ICE with a displacement of less than 30 liters per cylinder where the model year is 2007 or later, for engines that are not fire pump engines and for model year 2009 plus for fire pump engines (between 300 and 600 hp).

Emission limits have been established for NO_x, CO, and PM depending on the type of engine, model year, and maximum engine power. The emergency fire water pump engine is subject to a PM emission standard of 0.15 grams per horsepower-hours (g/hp-hr), NO_x standard of 3.0 g/hp-hr, and CO standard of 2.6 g/hp-hr. The emergency generator is subject to a PM emission standard of 0.20 grams per kilowatt-hours (g/kW-hr), NO_x standard of 6.4 g/kW-hr, and CO standard of 3.5 g/kW-hr. Sulfur content of the diesel fuel is limited to 15 ppm beginning June 1, 2010 [40 CFR 80.510(b)].

These units will be operated, if necessary, for up to 2 hours per week for readiness testing and maintenance and up to 500 hr/yr as required during emergencies when the primary power source for that facility has been rendered inoperable in an emergency situation.

3.3.2 Georgia Rules

The Georgia EPD regulations for existing and new stationary sources are covered in the Chapter 391-3-1-.02. The Georgia EPD has adopted the EPA NSPS by reference in Chapter 391-3-1-.02(8); Subsections (b)38 for stationary CTs and (b)3 for duct burners. Therefore, the Project must meet the

same emissions, performance testing, monitoring, reporting, and record keeping requirements as those described in the EPA regulations. Georgia EPD has authority for implementing NSPS requirements in Georgia.

3.3.3 Georgia Air Permitting Requirements

The Georgia EPD regulations require any new source to obtain an air permit prior to construction. Major new sources must meet the appropriate PSD and nonattainment requirements as discussed previously. Required permits and approvals for air pollution sources include NSR for nonattainment areas, PSD, NSPS, National Emission Standards for Hazardous Air Pollutants (NESHAP), Permit to Construct, and Permit to Operate. The requirements for construction permits and approvals are contained in Chapter 391-3-1-.03.

3.4 PSD Applicability to the Project

3.4.1 Area Classification

The Project will be located in Glynn County, which has been designated by EPA and Georgia EPD as an attainment area for all criteria pollutants. Glynn County and surrounding counties are designated as PSD Class II areas for SO_2, PM, and NO_2. The nearest PSD Class I areas to the site are the Okefenokee and Wolf Island National Wilderness Areas (NWAs) located about 64 and 23 km from the site, respectively. Other PSD Class I areas are located more than 200 km from the site.

Based on discussions with the Georgia EPD, the minor facility baseline date has been triggered in Glynn County. As a result, pollutant emissions from other PSD increment-consuming sources would need to be included in an air quality impact analysis if the Project's impacts are expected to be greater than the significant impact levels.

3.4.2 PSD Review

The proposed Project is one of the named major sources (*fossil fuel-fired steam electric plant with heat input of more than 250 million Btus per hour*); therefore, the major source threshold is 100 TPY. The Project is considered to be a "major facility" because the annual emissions of several regulated pollutants from the two CTs and duct burners are estimated to exceed 100 TPY. Therefore, PSD review is required for any pollutant for which the emissions are considered major or exceed the PSD significant emission rates. As shown in Table 3-3, potential emissions from the Project will be major for NO_x and CO, and greater than the significant emission rate levels for NO_x, CO, VOCs, PM, PM_{10}, $PM_{2.5}$, SO_2, and SAM.

The nearest Class I areas to the site are the Okefenokee and Wolf Island NWAs located about 64 and 23 km from the site, respectively. As a result, PSD Class I analyses were performed to determine if the Project's impacts would be less than the PSD Class I significant impact levels.

3.4.3 Emission Standards

The applicable NSPS for the CTs and duct burners is 40 CFR Part 60, Subpart KKKK. The proposed emissions for the turbines will be well below the specified limits (see Section 4.0).

The applicable NSPS for the fuel heater is 40 CFR Part 60, Subpart Dc. For natural gas-fired units, no pollutant emission limits are specified in the NSPS.

The applicable NSPS for the emergency generator is 40 CFR Part 60, Subpart IIII. The emergency generator will comply with the emission limits established in the NSPS.

Excess emissions from startup, shutdown, and malfunction will be minimized by following procedures in Georgia EPD rules for excess emissions [Chapter 391-3-1-.02(a)7]. These procedures include implementing best operational practices, operating air pollution control equipment in a manner consistent with good air pollution control practice, and minimizing the duration of excess emissions.

3.4.4 Ambient Monitoring

Based on the estimated pollutant emissions from the proposed Project (see Table 3-3), pre-construction ambient monitoring analyses for SO_2, PM_{10}, $PM_{2.5}$, NO_2, CO, ozone (O_3) (based on NO_x emissions), and SAM are required to be submitted as part of the application. However, if the net increase in impact of these pollutants is less than the applicable *de minimis* monitoring concentration (100 TPY of NO_x or VOC in the case of O_3), then an exemption from submittal of pre-construction ambient monitoring data may be obtained [40 CFR 52.21(i)(8)]. In addition, if EPA has not established an acceptable ambient monitoring method for the pollutant, monitoring is not required.

Submission of pre-construction monitoring data should not be required for this Project because, as shown in Table 3-4, the proposed Project's impacts are predicted to be below the applicable *de minimis* monitoring concentration levels for all pollutants except O_3. For ozone, the Project's VOC emissions are less than the monitoring emission level of 100 TPY, but NO_x emissions are greater than 100 TPY. Existing ambient O_3 air quality data in the region demonstrate attainment of the AAQS. For SAM, although the Project's emissions are greater than the significant emission rate,

EPA has established no acceptable monitoring method for this pollutant. Therefore, an exemption from the preconstruction monitoring requirement for sulfuric acid is requested in accordance with the PSD regulations.

3.4.5 GEP Stack Height Impact Analysis

The GEP stack height regulations allow any stack to be at least 65 m [213 feet (ft)] high. The proposed HRSG stacks will be 140 ft. These stack heights do not exceed the applicable GEP stack heights. However, as discussed in Section 6.0, Air Quality Modeling Approach, building downwash effects must be considered in the modeling analysis since the stack heights are less than GEP. As a result, the potential for downwash of emissions from the CTs caused by nearby structures is included in the modeling analysis.

3.4.6 Nonattainment Review

The site is located in Glynn County, which is classified as an attainment area for all criteria pollutants. Therefore, nonattainment requirements are not applicable.

3.4.7 Other Clean Air Act Requirements

The 1990 CAA Amendments established a program to reduce potential precursors of acidic deposition. The Acid Rain Program was delineated in Title IV of the CAA Amendments and required EPA to develop the program. EPA's final regulations were promulgated on January 11, 1993, and included permit provisions (40 CFR Part 72), an allowance system (Part 73), continuous emission monitoring (Part 75), excess emission procedures (Part 77), and appeal procedures (Part 78). The Georgia EPD has implemented rules that are consistent with the federal permit regulations applicable to facilities affected by the requirements of Title IV of the CAA Amendments.

EPA's Acid Rain Program applies to all existing and new utility units except those serving a generator less than 25 MW, existing simple cycle CTs, and certain non-utility facilities. Units that fall under the program are referred to as affected units. The EPA regulations are applicable to the proposed Project for the purposes for obtaining a permit and allowances, as well as emission monitoring. New units are required to obtain permits under the program by submitting a complete application 24 months before the later of January 1, 2000, or the date on which the unit begins serving an electric generator greater than 25 MW. An Acid Rain Permit application is submitted in Attachment B of this permit application package.

The Acid Rain (Title IV) permit will provide SO_2 and NO_x emission limitations and the requirement to hold SO_2 emission allowances. Emission limitations established in the Acid Rain Program are presumed to be less stringent than BACT for new units. An allowance is a market-based financial instrument that is equivalent to 1 ton of SO_2 emissions. Allowances can be sold, purchased, or traded. For the proposed Project, SO_2 allowances will be obtained from the market. There is currently no NO_x allowance trading program in place.

Continuous emission monitoring (CEM) for SO_2 and NO_x is required for gas- and oil-fired affected units. SO_2 emissions for natural gas may be determined using procedures established in Appendix D, 40 CFR Part 75. CO_2 emissions must also be determined either through a CEM (e.g., as a diluent for NO_x monitoring) or calculation. Alternate procedures, test methods, and quality assurance/quality control (QA/QC) procedures for CEM are specified (Part 75 Appendices A through I). The CEM requirements including QA/QC procedures are, in general, more stringent than those specified in the NSPS for Subpart KKKK. New units are required to meet the requirements by the later of January 1, 1995, or not later than 90 days after the unit commences commercial operation. The Project will be required to either install CEMs for NO_x or establish predictive emission monitors (PEMs) to meet the Part 75 requirements.

The 1990 CAA Amendments also established a federally mandated air operating permitting program. The program requires the states to adopt regulations consistent with the CAA and the implementing regulations promulgated by EPA in 40 CFR 70. The program applies to "Title V or Part 70" sources that include major stationary sources of air pollutants. The State of Georgia has adopted the requirements of 40 CFR 70 in Georgia Rules 391-3-1-.03(10), which specify that all applicable sources, such as those proposed for this project, have a Part 70 permit to operate.

The EPA has, and is currently developing, emissions standards for HAPs for various industrial categories. These new NESHAPs are based on the use of Maximum Achievable Control Technology (MACT). The adopted standards are contained in 40 CFR Part 63. New sources that emit more than 10 TPY of a single HAP or 25 TPY of total HAPs are required to apply MACT for the promulgated industrial category or to obtain a case-by-case MACT determined from the applicable regulatory authority after submitting a MACT analysis. For the Project, emissions of HAPs will be less than 10 TPY of a single HAP and 25 TPY of all HAPs.

The 1990 CAA Amendments required both the EPA and the Occupational Safety and Health Administration (OSHA) to issue regulations that would help prevent accidental releases of hazardous chemicals. EPA was required to address the consequences of accidental releases beyond a facility's property while OSHA was required to address the consequences on the facility's property. The EPA met their obligation with the promulgation of 40 CFR 68, *Accidental Release Prevention Requirements: Risk Management Programs Under the Clean Air Act Section 112(r)(7)*, in June 1996. The rule applies to all stationary sources that have a regulated substance present in a process in more than the listed threshold quantity. If the threshold quantity for a regulated substance is exceeded, then the facility would need to develop a risk management plan. Aqueous NH_3 is a regulated substance if its concentration is 20-percent or more in a mixture. Since the aqueous NH3 proposed for the SCR system for this Project will be in a mixture that contains less than 20-percent NH_3, the Project does not need to develop a risk management plan as specified in the rule. However, the Project is subject to the general duty clause under Section 112(r)(1) of the CAA. The general duty clause directs owners and operators of stationary sources to identify hazards that may result from accidental releases, to design and maintain a safe facility, and to minimize the consequences of releases when they occur. The general duty clause applies to all stationary sources that have any "extremely hazardous substance" that are not limited to the list of regulated substances under Section 112(r) or under OSHA's regulations.

TABLE 3-1
NATIONAL AND STATE AAQS, ALLOWABLE PSD INCREMENTS, AND SIGNIFICANT IMPACT LEVELS

Pollutant	Averaging Time	AAQS ($\mu g/m^3$) National Primary [a]	AAQS ($\mu g/m^3$) National Secondary [a]	AAQS ($\mu g/m^3$) Georgia [a]	PSD Increments ($\mu g/m^3$) Class I [a]	PSD Increments ($\mu g/m^3$) Class II [a]	Significant Impact Levels ($\mu g/m^3$) [b]
Sulfur Dioxide	Annual Arithmetic Mean	80	NA	80	2	20	1
	24-Hour Maximum	365	NA	365	5	91	5
	3-Hour Maximum	NA	1,300	1,300	25	512	25
PM_{10} [c]	Annual Arithmetic Mean	NA	NA	50	4	17	1
	24-Hour Maximum	150	150	150	8	30	5
$PM_{2.5}$ [c]	Annual Arithmetic Mean	15	15	15	NA	NA	NA
	24-Hour Maximum	35	35	35	NA	NA	NA
NO_2	Annual Arithmetic Mean	100	100	100	2.5	25	1
CO	8-Hour Maximum	10,000	10,000	10,000	NA	NA	500
	1-Hour Maximum	40,000	40,000	40,000	NA	NA	2,000
Ozone [c]	8-Hour Maximum	157	157	157	NA	NA	NA
Lead	Calendar Quarter Arithmetic Mean	1.5	1.5	1.5	NA	NA	NA

Note: Particulate matter (PM_{10}) = particulate matter with aerodynamic diameter less than or equal to 10 micrometers.
Particulate matter ($PM_{2.5}$) = particulate matter with aerodynamic diameter less than or equal to 2.5 micrometers.
NA = Not applicable, i.e., no standard exists.

[a] Short-term maximum concentrations are not to be exceeded more than once per year, except where noted.
[b] Maximum concentrations, which if exceeded, may require additional review.
[c] On July 18, 1997, EPA promulgated revised AAQS for particulate matter and ozone. The ozone standard was modified to be 0.08 ppm (157 $\mu g/m^3$); achieved when 3-year average of 4th highest value is 0.08 ppm or less. On October 17, 2006, the $PM_{2.5}$ standards were finalized: 24-hour standard of 35 ug/m^3 (3-year average of 98th percentile) and annual standard of 15 $\mu g/m^3$ (3-year average at community monitors). The annual PM_{10} AAQS was revoked.

Sources: Federal Register, Vol. 43, No. 118, June 19, 1978.
40 CFR 50; 40 CFR 52.21. GEPD Rules for Air Quality Control, Chapter 391-3-1-.02 (4).

TABLE 3-2
PSD SIGNIFICANT EMISSION RATES AND *DE MINIMIS* MONITORING CONCENTRATIONS

Pollutant	Regulated Under	Significant Emission Rate (TPY)	*De Minimis* Monitoring Concentration[a] ($\mu g/m^3$)
Sulfur Dioxide	NAAQS, NSPS	40	13, 24-hour
Total Particulate Matter	NSPS	25	10, 24-hour
Particulate Matter <10 microns	NAAQS	15	10, 24-hour
Fine Particulate Matter	NAAQS	10	
Nitrogen Dioxide	NAAQS, NSPS	40	14, annual
Carbon Monoxide	NAAQS, NSPS	100	575, 8-hour
Volatile Organic Compounds (for O_3)	NAAQS, NSPS	40	100 TPY[b]
Lead	NAAQS	0.6	0.1, 3-month
Sulfuric Acid Mist	NSPS	7	NM
Total Fluorides	NSPS	3	0.25, 24-hour
Total Reduced Sulfur	NSPS	10	10, 1-hour
Reduced Sulfur Compounds	NSPS	10	10, 1-hour
Hydrogen Sulfide	NSPS	10	0.2, 1-hour
Mercury	NESHAP	0.1	0.25, 24-hour
MWC Organics	NSPS	3.5×10^{-6}	NM
MWC Metals	NSPS	15	NM
MWC Acid Gases	NSPS	40	NM
MSW Landfill Gases	NSPS	50	NM

Footnotes:

[a] Short-term concentrations are not to be exceeded.

[b] No *de minimis* concentration; an increase in VOC or NO_x emissions of 100 TPY or more will require monitoring analysis for ozone.

[c] Any emission rate of these pollutants.

Note: Ambient monitoring requirements for any pollutant may be exempted if the impact of the increase in emissions is below the *de minimis* monitoring concentrations.

MSW = municipal solid waste
MWC = municipal waste combustor
NAAQS = National Ambient Air Quality Standards
NESHAP = National Emission Standards for Hazardous Air Pollutants
NM = no ambient measurement method established, therefore no *de minimis* concentration has been established.
NSPS = New Source Performance Standards

Source: 40 CFR 52.21

TABLE 3-3
NET INCREASE IN EMISSIONS DUE TO PROPOSED PROJECT COMPARED TO THE PSD SIGNIFICANT EMISSION RATES
LIVE OAKS POWER PROJECT, GLYNN COUNTY, GEORGIA

Pollutant	Emissions (TPY) Project Potential Emissions[a]	Emissions (TPY) Significant Emission Rate	PSD Review Required?
Sulfur Dioxide	32.9	40	Yes
Total Particulate Matter	76.0	25	Yes
Particulate Matter <10 microns	74.3	15	Yes
Fine Particulate Matter	70.6	10	Yes
Nitrogen Dioxide	185.1	40	Yes
Carbon Monoxide	418.5	100	Yes
Volatile Organic Compounds (for O_3)	132.5	40	Yes
Lead	neg.	0.6	No
Sulfuric Acid Mist	6.8	7	No
Total Fluorides	neg.	3	No
Total Reduced Sulfur	neg.	10	No
Reduced Sulfur Compounds	neg.	10	No
Hydrogen Sulfide	neg.	10	No
Mercury	neg.	0.1	No
MWC Organics (as 2,3,7,8-TCDD)	neg.	3.5×10^{-6}	No
MWC Metals (as Be, Cd)	neg.	15	No
MWC Acid Gases (as HCl)	neg.	40	No
MSW Landfill Gases (NMOC)	neg.	50	No

Footnote:

[a] Based on the Project operating in combined cycle mode with two CTs at baseload conditions firing natural gas at 59° F ambient temperature. Emissions estimates include CT-only operation for 2,546 hours; duct firing at a maximum heat imput rate or 359 MMBtu/hr (HHV) for 4,000 hours; startup and shutdown (SU/SD) operation including 18 cold starts, 63 warm starts, and 119 hot starts (total 200 SU/SD for 462 hours); and downtime between SU/SD operations for 1,752 hours. In addition, emissions estimates include the cooling tower, one fuel gas heater, an emergency generator, and a firewater pump.

NOTE:

Be = beryllium
Cd = cadmium
HCl = hydrogen chloride
neg. = negligible
NMOC = Non-Methane Organic Compounds
TCDD = tetra- through octa-chlorinated dibenzo-p-dioxans and dibenzofurans

TABLE 3-4
PREDICTED NET INCREASE IN IMPACTS DUE TO PROPOSED PROJECT COMPARED TO PSD *DE MINIMIS* MONITORING CONCENTRATIONS
LIVE OAKS POWER PROJECT, GLYNN COUNTY, GEORGIA

Pollutant	Concentration ($\mu g/m^3$) Predicted Net Increase in Impact[a]	*De Minimis* Monitoring Concentration	PSD Monitoring Required?
Sulfur Dioxide	0.72	13, 24-hour	No
Total Particulate Matter	1.91	10, 24-hour	No
Particulate Matter <10 microns	1.91	10, 24-hour	No
Nitrogen Dioxide	0.65	14, annual	No
Carbon Monoxide	26.8	575, 8-hour	No
Ozone (as VOC)	132.5	100 TPY	Yes[b]
Ozone (as NO_x)	185.1	100 TPY	Yes[b]

[a] See Section 6.0 for air dispersion modeling results.

[b] Existing ozone ambient air quality data demonstrate compliance with the AAQS.

Source: Golder, 2008; 40 CFR 52.21.

4.0 CONTROL TECHNOLOGY REVIEW

4.1 Applicability

New major stationary sources of air pollution are required by the CAA to obtain an air quality permit before commencing construction. This process is called NSR and is required whether the major source is planned for an area where air quality is acceptable (attainment and unclassified areas) or an area where the NAAQS are exceeded (nonattainment areas). NSR permit requirements in an attainment area are known as PSD NSR requirements, and those in a nonattainment area are known as nonattainment NSR requirements.

The PSD NSR or nonattainment NSR requirements are pollutant-specific and depend on the magnitude of the emissions of each pollutant and classification of the area. For the proposed Project, the NSR requirements are applicable for NO_x), CO, VOCs, PM, $PM_{10,}$, $PM_{2.5}$, SO_2, and SAM (see Section 3.0) emissions.

Glynn County is classified as attainment for all pollutants. As a result, nonattainment NSR does not apply and the Project is subject to PSD NSR requirements and BACT analysis for these pollutants.

The following sections present the NSPS emissions limitations that are applicable to equipment at the facility (Section 4.2) and the pollutant-specific BACT analysis for each source at the facility (Sections 4.4 through 4-7). BACT analysis process is described in Section 4.3

4.2 New Source Performance Standards

Per the EPA's 1990 Draft NSR Manual ("the Manual"), air emission controls incapable of meeting an applicable NSPS would not meet the definition of BACT and therefore do not need to be considered in the BACT analyses[7]. Accordingly, NSPS emission limits define the minimum levels of control that may be considered in a BACT analysis. The applicable NSPS emission limits are discussed below.

As mentioned in Section 3.3, the NSPS for new combined cycle units is codified in 40 CFR Part 60, Subpart KKKK, Standards of Performance for Stationary Combustion Turbines, which is applicable to CTs, including associated HRSGs and duct burners, that will commence construction after

[7] U.S. EPA, *New Source Review Workshop Manual (Draft)*, 1990, p. B.12.

February 18, 2005. The Subpart KKKK requirements for NO_x emissions applicable to CTs with heat input at peak load greater than 850 MMBtu/hr apply to the CT/HRSG trains associated with the Project. The NO_x emissions are limited to 15 ppm by volume (ppmv) corrected to 15-percent O_2 or 0.43 pounds per megawatt-hour (lb/MW-hr) for natural gas-firing. In addition, the NSPS also requires that CTs operating at less than 75-percent load or ambient temperatures less than 0 °F limit NO_x emissions to 96 ppmv corrected to 15-percent O_2 or 4.7 lb/MW-hr. For SO_2 emissions, the Subpart KKKK requirements limit emissions to 110 nanograms per Joule (ng/J) or 0.90 lb/MW-hr gross output or total potential sulfur emissions of 26 ng SO_2/J or 0.060 pounds (lb) SO_2/MMBtu heat input.

The applicable NSPS for the proposed natural gas heater is 40 CFR Part 60, Subpart Dc, Standards of Performance for Small Industrial-Commercial-Institutional Steam Generating Units. For natural gas-fired units, no pollutant emission limits are specified in the NSPS.

The applicable NSPS for new stationary internal combustion engines, such as the emergency generator and firewater pump, is 40 CFR Part 60, Subpart IIII, Standards of Performance for CI ICE. Emission limits have been established for non-methane hydrocarbons (NMHC), NO_x, CO, and PM depending on the type of engine, model year, and maximum engine power. The emergency fire water pump engine for the Project (between 300 and 600 hp, engine displacement <30 liters/cylinder) is subject to PM emission standard of 0.20 g/kW-hr (0.15 g/HP-hr), NMHC + NO_x standard of 4.0 g/kW-hr (3.0 g/HP-hr), and CO standard of 3.5 g/kW-hr (2.6 g/HP-hr). The emergency generator for the Project (<3,000 HP and greater than or equal to 50 HP, engine displacement <10 liters/cylinder) is subject to PM emission standard of 0.20 g/kW-hr, NMHC + NO_x standard of 6.4 g/kW-hr, and CO standard of 3.5 g/kW-hr. Sulfur content of the diesel fuel is limited to 15 ppm beginning June 1, 2010 [40 CFR 80.510(b)].

There are no NSPS for mechanical draft cooling towers.

4.3 Overview of Proposed BACT

In recent permitting actions, Georgia EPD has established BACT for heavy-duty industrial CTs. Since 2001, Georgia EPD has issued 8 PSD permits with BACT determinations for projects involving natural gas-fired combined cycle CTs. These decisions for CTs have included the use of advanced DLN combustors and SCR for limiting emissions of NO_x, good combustion practices and oxidation catalyst for minimizing CO and VOC emissions, and the use of clean fuels (natural gas) for control of

other emissions including PM_{10} and SO_2. The stack exhaust NO_x concentration levels have ranged from 2.5 to 3.0 ppmvd corrected to 15-percent O_2 in these determinations. The BACT proposed for the Project is consistent with these PSD permits.

The BACT proposed for the Project are:

- NO_x - State-of-the-art DLN combustion technology and SCR for the CTs to achieve exhaust NO_x levels of no greater than 2.5 ppmvd corrected to 15-percent O_2. Low NO_x burners for the gas heater.
- CO – Oxidation catalyst system. CT stack exhaust CO concentration will be limited to 2.0 ppmvd at 15-percent O_2 without duct firing and 3.0 ppmvd at 15-percent O_2 with duct firing. Good combustion practices will be used for fuel heater and emergency engines.
- VOC – Oxidation catalyst system. CT stack exhaust VOC concentration will be limited to 1.0 ppmvd at 15-percent O_2 without duct firing and 7.4 ppmvd at 15-percent O_2 with duct firing. Good combustion practices will be used for fuel heater and emergency engines.
- $PM/PM_{10}/PM_{2.5}$ – Use of low-sulfur natural gas for the CTs and the fuel gas heater, and use of low-sulfur diesel fuel for the emergency engines. Maximum sulfur content of natural gas will be limited to 0.8 grains of sulfur per 100 standard cubic foot. Maximum sulfur content of the diesel fuel will be limited to 0.05-percent by weight. Drift rate for the cooling tower will be limited to 0.001-percent.
- SO_2 and SAM – Use of low-sulfur natural gas for the CTs and the fuel gas heater, and use of low-sulfur diesel fuel for the emergency engines. Maximum sulfur content of natural gas will be limited to 0.8 grains of sulfur per 100 SCF. Maximum sulfur content of the diesel fuel will be limited to 0.05 percent by weight.

4.4 BACT Analysis

The approach to the BACT analysis is based on the regulatory definitions of BACT, as well as consideration of EPA's current policy guidelines requiring a top-down approach. A BACT determination requires analyses of the economic, environmental, and energy impacts of the proposed and alternative control technologies. The analyses must, by definition, be specific to the Project (i.e., case-by-case).

4.4.1 Summary of Top-Down Process

The control technology review process and the "top-down" approach for BACT determination is described in Section 3.2. This procedure includes a five-step process for considering all available control technologies from most stringent to least stringent. The most stringent control technology is

considered BACT unless the applicant demonstrates, and the permitting authority agrees, that technical considerations, or energy, environmental or economic impacts justify elimination of the most stringent technology and selection of a less stringent technology.

A summary of each of the five steps in the top-down process is described below. This process was repeated for each of the Project's emission units and for each pollutant emitted from the emission unit for which the control technology review requirements are applicable (NO_x, CO, VOC, $PM/PM_{10}/PM_{2.5}$, SO_2, and sulfuric acid (H_2SO_4).

Step 1 - Identify All Control Technologies

The primary objective of Step 1 is to identify all potentially applicable control options. Potentially applicable control options are those air pollution control technologies, or techniques, with a practical potential for application to the emission unit and regulated pollutant under evaluation. Potentially applicable control options are categorized as lower emitting processes/practices or add-on controls.

A lower polluting process/practice is considered applicable if it has been demonstrated in a similar application. An add-on control is considered applicable if it can properly function given the physical and chemical characteristics of the pollutant-bearing emission stream. Combinations of control options should be considered whenever such combinations would provide more effective emissions control.

The range of potentially applicable control options was surveyed based on EPA's RACT/BACT/ lowest achievable emission rate (LAER) Clearinghouse (RBLC) database in their Clean Air Technology Center website and control technology vendors. A list of potentially applicable control technology options was developed for each emission unit emitted pollutant subject to control technology review.

Step 2 - Eliminate Technically Infeasible Options

The objective of Step 2 is to refine the list of potentially applicable control technology options developed in Step 1 by evaluating the technical feasibility of each of the control technology options.

Per the EPA's Draft NSR Manual[8], control technologies that have been installed and operated successfully on the type of source under review are "demonstrated" and are considered technically

[8] U.S. Environmental Protection Agency (EPA). 1990. New Source Review Workshop Manual, Chapter B, Section III.B.

feasible. For technologies that have not been demonstrated for a particular source type, EPA's Draft NSR Manual states the following regarding technical feasibility:

> *Two key concepts are important in determining whether an undemonstrated technology is feasible: "availability" and "applicability." As explained in more detail below, a technology is considered "available" if it can be obtained by the applicant through commercial channels or is otherwise available within the common sense meaning of the term. An available technology is "applicable" if it can reasonably be installed and operated on the source type under consideration. A technology that is available and applicable is technically feasible.*[9]

Per this guidance, a technology is considered technically infeasible if it is not available or not applicable. EPA's Draft NSR Manual provides additional guidance on availability and applicability of a given technology for a particular source type:

> *A control technique is considered available if it has reached the licensing and commercial sales stage of development. A source would not be required to experience extended time delays or resource penalties to allow research to be conducted on a new technique. Neither is it expected that an applicant would be required to experience extended trials to learn how to apply a technology on a totally new and dissimilar source type. Consequently, technologies in the pilot scale testing stages of development would not be considered available for BACT review.*[10]

Commercial availability by itself, however, is not necessarily sufficient basis for concluding a technology to be applicable and, therefore, technically feasible. Technical feasibility, as determined in Step 2, also means a control option may reasonably be deployed on or "applicable" to the source type under consideration. Technical judgment on the part of the applicant and the review authority is to be exercised in determining whether a control alternative is applicable to the source type under consideration.

In general, a commercially available control option will be presumed applicable if it has been or is soon to be deployed (e.g., is specified in a permit) on the same or a similar source type. Absent a showing of this type, technical feasibility would be based on examination of the physical and chemical characteristics of the pollutant-bearing gas stream and comparison to the gas stream characteristics of the source types to which the technology had been applied previously. Deployment of the control technology on an existing source with similar gas stream characteristics is generally sufficient basis for concluding technical feasibility barring a demonstration to the contrary.

---

[9] U.S. Environmental Protection Agency (EPA). 1990. New Source Review Workshop Manual, Chapter B, Section IV.B.
[10] U.S. Environmental Protection Agency (EPA). 1990. New Source Review Workshop Manual, Chapter B, Section IV.B.

In the Step 2 analysis, each technology presented in Step 1 is evaluated to determine whether the technology is both available and applicable. Control technologies that are not available or not applicable are determined to be technically infeasible.

Step 3 - Rank Remaining Control Technologies by Control Effectiveness

In Step 3 of the "top-down" approach, control technologies not eliminated in Step 2 are ranked in order of control effectiveness.

The ranking of the control options initially involves the establishment of appropriate units of emission performance. Once a measure of performance is established, factors such as the operational characteristics of each of the control technologies and any operating assumptions are considered in establishing emissions reduction potential.

After identifying the appropriate performance units and establishing the emissions performance levels for each control technology, a table is developed to rank the control technology options by their respective emissions performance from lowest to highest emissions level (highest to lowest control effectiveness).

Step 3 of the analysis also includes a listing of the energy, environmental, and economic impacts associated with each control option. These impacts are evaluated in the next step of the analysis.

Step 4 - Evaluate Most Effective Controls and Document Results

The purpose of Step 4 is to either confirm the suitability of the top ranked control technology option as BACT, or provide clear justification for a determination that a lower-ranked control technology option is BACT for the case under consideration. In order to establish the suitability of a control technology option, a case-by-case evaluation of the energy, environmental, and economic impacts of the control technology is performed.

The energy impacts analysis determines whether the energy requirements of the control technology would result in any significant energy penalties or benefits. The environmental impacts analysis considers site-specific impacts of the solid, liquid, and gaseous discharges that would result from implementation of the control technology. The economic analysis considers the cost effectiveness and the incremental cost effectiveness to establish whether the control technology would result in a negative economic impact.

The case-by-case determinations consider both beneficial and adverse direct impacts from an energy, environmental, and economic standpoint. In cases where the determination establishes that there are significant energy, environmental, and/or economic issues that would preclude the selection of the evaluated alternative as BACT, the basis for this determination is clearly documented, and the next most effective alternative is similarly evaluated. This process continues until the evaluated alternative is not rejected and is selected as BACT.

Step 5 – Most Effective Control Alternative not eliminated Selected as BACT

In Step 5, the highest ranked control technology not eliminated in Step 4 is selected as BACT.

4.5 BACT Analysis for Combined-Cycle CTs

This section contains the BACT analysis for the NO_x, CO, VOC, $PM/PM_{10}/PM_{2.5}$, SO_2, and H_2SO_4 emissions from the combined-cycle units.

4.5.1 NO_x

Step 1 – Identification of NO_x Control Technologies

Several resources were used in identifying the control technologies potentially available for the combined-cycle units. A comprehensive listing of the BACT/LAER decisions made by state environmental agencies and EPA regional offices for gas-fired combined-cycle units can be found on the EPA Region 4 website (http://www.epa.gov/Region4/air/permits). This database was developed and is maintained by EPA Region 4 from information obtained from the BACT/LAER Information System database maintained at EPA's National Computer Center located at Research Triangle Park, North Carolina. Additionally, a search of EPA's RBLC database was conducted, and available vendor literature was reviewed. Based on the results of this research, the following control technologies are potentially available.

Wet Injection

The injection of water or steam in the combustion zone of combustion turbines reduces the flame temperature with a corresponding decrease of NO_x emissions. The amount of NO_x reduction possible depends on the combustor design and the water-to-fuel ratio employed. An increase in the water-to-fuel ratio will cause a concomitant decrease in NO_x emissions until flame instability occurs. At this point, operation of the combustion turbine becomes inefficient and unreliable, and significant increases in products of incomplete combustion result (i.e., CO and VOC emissions). In modern applications, wet injection is used only for units firing fuel oil.

DLN Combustor

In the past several years, manufacturers have offered and installed machines with DLN combustors. These combustors, which are offered on conventional machines manufactured by General Electric (GE), Siemens Westinghouse, Mitsubishi Heavy Industries (MHI), and ABB, can achieve NO_x concentrations of as low as 9 ppmvd or less when firing natural gas. All these vendors have offered DLN combustors on advanced heavy-duty industrial units. Thermal NO_x formation is inhibited by using combustion techniques where the natural gas and combustion air are premixed before ignition. For the combined-cycle units being considered for the project, the standard combustion chamber design includes the use of DLN combustor technology.

Selective Catalytic Reduction

SCR is a process for controlling emissions of NO_x from stationary sources. The basic principle of SCR is the reduction of NO_x to N_2 and H_2O by the reaction of NO_x and NH_3 within a catalyst bed. The primary reactions occurring in SCR require O_2, so that the catalyst performs more effectively at O_2 levels above 2 to 3-percent.

Several different catalysts are available for use at different exhaust gas temperatures. In use the longest and most common are base metal catalysts, which typically contain titanium and vanadium oxides, and which also may contain molybdenum, tungsten, and other elements. Base metal catalysts are useful between 450 and 800°F. For high temperature operation (675°F to over 1100°F), zeolite catalysts may be used. In clean, low temperature (350 to 550°F) applications, catalysts containing precious metals such as platinum and palladium are useful[11].

The mechanical operation of an SCR system is quite simple. It consists of a reactor chamber with a catalyst bed, composed of catalyst modules, and an NH_3 handling and injection system, with the NH_3 injected into the flue gas upstream of the catalyst. There are no moving parts. Other than spent catalyst, the SCR process produces no waste products.

In principle, SCR can provide reductions in NO_x emissions approaching 100-percent. (Simple thermodynamic calculations indicate that a reduction of well over 99-percent is possible at 650°F.) In practice, commercial SCR systems have met control targets of over 90-percent in many cases.

SCR is very cost-effective for natural gas-fired units. Less catalyst is required since the waste gas stream has lower levels of NO_x, sulfur, and particulate matter. Combined-cycle natural gas turbines

[11] Institute of Clean Air Companies, description of NO_x control technologies.

frequently use SCR technology for NO_x reduction. A typical combined-cycle SCR design places the reactor chamber after the superheater within a cavity of the HRSG system. The flue gas temperature in this area is within the operating range for base metal-type catalysts.[12] For natural gas-fired combined cycle gas turbine units, SCR is considered an available, demonstrated technology.

$SCONO_x$™ Process

Goal Line Environmental Technologies (GLET) developed the $SCONO_x$, a relatively new post combustion technology, which utilizes a coated oxidation catalyst to oxidize and remove both NO_x and CO without a reagent such as NH_3. Now offered by EmeraChem (formerly Goal Line), the technology is marketed under the name EMx. EMx is described as the next generation of the $SCONO_x$ technology.

The $SCONO_x$ system consists of a platinum-based catalyst coated with potassium carbonate (K_2CO_3) to oxidize CO to CO_2 and NO to NO_x. CO_2 generated in the catalyst bed is exhausted to the atmosphere with the flue gas, while NO_2 absorbs onto the catalyst to form potassium nitrite (KNO_2) and potassium nitrate (KNO_3). Periodically, dilute hydrogen gas is passed across the catalyst to regenerate the potassium carbonate coating. The regeneration step converts KNO_2 and KNO_3 into K_2CO_3, water, and nitrogen gas. In order to maintain continuous operation during catalyst regeneration, the system is furnished in arrays of 5-module catalyst sections. During operation, 4 of the 5 modules are online and treating flue gas, while one module is isolated from the flue gas for regeneration. NO_x reduction in the system occurs in an operating temperature range of 300 to 700°F, and, therefore, must be installed in the appropriate temperature section of a HRSG.

A regeneration cycle is typically set to last for 3 to 5 minutes. Regeneration gas is produced by reacting natural gas with O_2 present in ambient air. The $SCONO_x$™ system uses a gas generator to produce hydrogen and carbon dioxide. For $SCONO_x$™ systems installed in locations of the HRSG above 500°F, a separate regeneration gas generator is not required. Instead, regeneration gas is produced by introducing natural gas directly across the $SCONO_x$™ catalyst that reforms the natural gas.

The $SCONO_x$™ system catalyst is subject to reduced performance and deactivation due to exposure to sulfur oxides. For this reason, an additional catalytic oxidation/absorption system ($SCOSO_x$™) to remove sulfur compounds is installed upstream of the $SCONO_x$™ catalyst. The SO_2 is oxidized to sulfur trioxide (SO_3) by the $SCOSO_x$™ catalyst. The SO_3 is then deposited on the catalyst and

[12] EPA's Air Pollution Control Technology Fact Sheet for SCR, EPA-452/F-03-032.

removed from the catalyst when it is regenerated. The $SCOSO_x$™ catalyst is regenerated along with the $SCONO_x$™ catalyst.

The $SCONO_x$™ catalyst must be recoated, or "washed" every 6 months to 1 year. The frequency of washing is dependent on the sulfur content in the fuel and the effectiveness of the $SCOSO_x$ catalyst. The "washing" consists of removing the catalyst modules from the unit and placing each module in a potassium carbonate reagent tank, which is the active ingredient of the catalyst. The $SCOSO_x$ catalyst also requires washing.

EmeraChem states that their EMx technology (the second-generation of the $SCONO_x$™ NO_x absorber technology) is capable of reducing gas-fired NO_x emissions to less than 1.0 ppm, release undetectable levels of CO, reduce VOC emissions by >90-percent, reduce fine particle matter by 30-percent, and reduce sulfur emissions by 95-percent.[13]

Commercial experience with the $SCONO_x$™ control system is limited. The NO_x reduction system was commercially demonstrated first at the 32 MW (GE LM2500 turbine) Sunlaw Federal Cogeneration Facility located in Vernon, California. NO_x emissions from the process was <2 ppm during 100-percent of operation, and <1 ppm for 90-percent of operation. Other installations of the technology include a 15 MW (Solar Titan 130 turbines) installation at the University of California, San Diego, and a 45 MW (Alstom GTX100 turbine) installation at the City of Redding Municipal Electric Plant. A number of smaller installations are also operating – two 5 MW installations at the Wyeth BioPharma cogeneration facility, Andover, MA, and a 5 MW installation at the Montefiore Medical Center, Bronx, NY. Actual NO_x emissions from these smaller installations are typically below 1.5 ppm, with substantial periods below 1.0 ppm.

EmeraChem states that the process is scalable. Alstom Power, one of the EMx licensees, engineered and installed the technology on one of their GTX100 (43 MW class) gas turbines. This size and design is a reproducible module that would be replicated several times for larger installations. Alstom has already produced preliminary designs for several standard size plants that match standard sizes of larger turbines.

The number of permitted and operating EMx installations is growing and the future of the EMx technology is very promising. Cummins Engine Company, one of EmeraChem's equity investors,

[13] EmeraChem's SCONOx white paper dated January 5, 2004. Multipollutant Emission Reduction Technology for Stationary Gas Turbines and IC Engines.

has helped apply the technology to internal combustion engines – particularly diesel engines. Despite the future promise commercial experience to date with the $SCONO_x$™ control system is limited to just a few small units. The Projects combustion turbines are approximately 200 MW each and there is no experience of the $SCONO_x$™ system on turbines of this size.

XONON™ Catalytic Combustor

The XONON™ Combustion System is a catalytic combustion system developed by Catalytica Energy Systems, Inc., that is designed to avoid high temperatures created in conventional combustors. The XONON™ combustor utilizes a catalyst integrated into the gas turbine combustor to limit temperature below the temperature where NO_x is formed. It also lowers CO and VOC emissions.

The XONON™ technology is installed as an integral part of the combustor. Conventional combustion fuel and air are supplied to combustor; however, rather than combusting the fuel in a flame, the XONON™ system combusts the fuel using a catalyst at lower temperatures. Fuel and air are thoroughly mixed prior to entering a catalyst region that acts to combust the fuel, releasing its energy. The XONON™ catalyst module consists of a channel structure whereby the fuel-air mixture readily passes through the channels coated with the catalyst. As fuel and O_2 molecules contact the channel walls, the molecules and catalyst interact and are rearranged at temperatures well below those of flame combustion. Energy is extracted from the fuel in this manner, producing carbon dioxide and water byproducts. Nitrogen molecules are not involved in the XONON™ chemistry and pass through the channels unchanged, thereby preventing the formation of NO_x.

The XONON™ technology was first designed into the combustor of a 1.4 MW Kawasaki Model M1A-13A gas turbine at Silicon Valley Power in Santa Clara, California in 1999. Since its installation, the turbine has operated as a demonstration of XONON™'s performance. The California EPA's Air Resources Board evaluated NO_x and CO CEMS data and concluded that XONON™ achieved a NO_x level of 2.5 ppmvd at 15-percent O_2 and a CO level of 6.0 ppmvd at 15-percent O_2.[14]

Other commercial installations of the XONON™ technology includes a 1.5 MW Kawasaki MIA-13X installation at Sonoma Development Center in Eldridge, CA and a 1.4 MW Kawasaki GPB15X installation at Plains Exploration & Production Company in San Luis Obispo, CA. The Eldridge installations expected performance was 3 ppmvd NO_x and 10 ppmvd CO. According to the manufacturer, the unit has consistently achieved continuous NO_x emission levels below the emission

[14] Report to the Legislature on Gas-Fired Power Plant NO_x Emission Controls and Related Environmental Impacts, May 2004. Air Resources Board, California EPA.

target and on the average, NO_x emissions are under 2.0 ppmvd at 15-percent O_2. Based on manufacturer report, the unit at the Plains Exploration & Production Co. has achieved NO_x emissions around 0.8 ppmvd at 15-percent O_2 on the average.

Kawasaki Gas Turbines-Americas started selling GPB 15X generators including 1.4-MW M1A-13X gas turbine equipped with XONON™ in December 2000. Furthermore, Catalytica Energy Systems is working with GE to incorporate XONON™ into their GE10 gas turbines (11.3 MW), and Solar Turbines for use in their Solar Taurus 70 gas turbines.

In September 2006, the XONON™ Combustion System (referred to as the XONON™ Cool Combustion® technology) was sold to Kawasaki Heavy Industries, Ltd. Kawasaki is currently making the technology available to the gas turbine generators in the 1- to 1.4-MW range.[15]

NO_xOUT Process

The NO_xOUT process originated from the initial research by the Electric Power Research Institute (EPRI) in 1976 on the use of urea to reduce NO_x. EPRI licensed the proprietary process to Fuel Tech, Inc., for commercialization. In the NO_xOUT process, aqueous urea is injected into the flue gas stream ideally within a temperature range of 1,600 to 1,900°F. In the presence of O_2, the following reaction results:

$$CO\ (NH_2)2 + 2NO + ½\ O_2 \rightarrow 2N_2 + CO_2 + 2H_2O$$

The amount of urea required is most cost-effective when the treatment rate is 0.5 to 2 moles of urea per mole of NO_x. In addition to the original EPRI urea patents, Fuel Tech claims to have a number of proprietary catalysts capable of expanding the effective temperature range of the reaction to between 1,600 and 1,950°F. Advantages of the system are as follows:

1. Low capital and operating costs as a result of use of urea injection; and
2. The proprietary catalysts used are nontoxic and nonhazardous, thus eliminating potential disposal problems.

[15] Product Brochure, Kawasaki Gas Turbine Generator Sets, www.khi.co.jp accessed in September 2008.

Disadvantages of the system are as follows:

1. Formation of NH_3 from excess urea treatment rates and/or improper use of reagent catalysts, and
2. Sulfur trioxide (SO_3), if present, will react with NH_3 created from the urea to form ammonium bisulfate, potentially plugging the cold-end equipment downstream.

Commercial application of the NO_xOUT system has been limited to oil and coal-fired boilers and municipal solid waste combustors and has not been demonstrated on any combined-cycle gas turbines.[16] The NO_xOUT ULTRA process is an approach to convert urea reagent to NH_3 for use on SCR system. The NO_xOUT ULTRA system has been demonstrated on a 90-MW GE 7EA gas turbine. However, it is not known to have been installed on any large gas turbines for commercial operation.[17]

Thermal DeNO$_x$

Thermal DeNO$_x$ is Exxon Research and Engineering Company's patented process for NO_x reduction. The process is a high-temperature selective noncatalytic reduction (SNCR) of NO_x using NH_3 as the reducing agent. Thermal DeNO$_x$ requires the exhaust gas temperature to be above 1,800°F. However, use of NH_3 plus hydrogen lowers the temperature requirement to about 1,000°F. For some applications, the high temperature must be achieved by additional firing in the exhaust stream before NH_3 injection.

The only known commercial applications of Thermal DeNO$_x$ are on heavy industrial boilers, large furnaces, and incinerators that consistently produce exhaust gas temperatures above 1,800°F. There are no known applications on or experience with combined-cycle units. Temperatures of 1,800°F require alloy materials constructed with very large piping and components since the exhaust gas volume would be increased by several times. As with the NO_xOUT process, high capital, operating, and maintenance costs are expected because of material requirements, an additional natural gas-fired exhaust heater system, and fuel consumption. Uncontrolled emissions would increase because of the additional fuel burning.

[16] Product Brochure, NO_xOUT NO_x Reduction Process, Fuel Tech website www.ftek.com accessed in September 2008.
[17] Product Brochure, NO_xOUT ULTRA NO_x Reduction Process, Fuel Tech website www.ftek.com accessed in September 2008.

Selective Non-Catalytic Reduction (SNCR)

SNCR is a post-combustion NO_x control technology that reduces NO_x into nitrogen gas and water vapor by reacting the flue gas with a reagent. SNCR systems can either use NH_3 or urea as reagents. The chemical reaction for this technology is driven by high temperatures, typically from 1,600 to 2,100°F, normally found in combustion sources. SNCR is "selective" in that the reagent reacts primarily with NO_x.

SNCR is a proven and reliable technology. SNCR was first applied commercially in 1974 and has been installed on approximately 400 applications worldwide. Applications include utility boilers and a broad range of industrial applications including installations on the following: wood-fired boilers, coal-fired boilers, co-generation boilers, pulp and paper boilers, steel industry furnaces, refinery process units, process heaters, cement kilns, municipal waste combustors, glass melting furnaces, hazardous waste incinerators, and other combustion sources. Urea-based SNCR has been applied commercially to sources ranging in size from a 60 MMBtu/hr (gross heat input) paper mill sludge incinerator to a 640 MW pulverized coal- fueled, wall-fired electric utility boiler.[18]

Non-Selective Catalytic Reduction (NSCR)

Stationary NSCR, as with the automobile sector, involves the use of a three-way catalyst technology to promote the reduction of NO_x to nitrogen and water and simultaneous oxidation of CO and HC to carbon dioxide and water. NO_x is reduced by the CO and H_2 over the catalyst under slightly rich or stoichiometric conditions to produce CO_2 and water with typical conversion efficiencies in the range 80 to 99-percent achievable together with corresponding decreases in HC and CO.

NSCR can be applied to various spark ignited internal combustion engines that are rich-burn, including natural gas-fueled engines. These types of engines are commonly found in the following applications: gas gathering and storage, gas transmission, power generation, combined heat and power, cogeneration/trigeneration, irrigation, inert gas production, and non-road mobile machinery. NSCR has been used routinely in the automotive industry to reduce vehicular carbon monoxide, hydrocarbons, and NO_x emissions with over a billion catalyst units equipped to automobiles since the mid-1970s. The application of NSCR to stationary gas engines for the control of NO_x and CO first

[18] Description for SNCR, Institute of Clean Air Companies. Typical Installation Timelines for NO_x Emissions Control Technologies on Industrial Sources, December 2006.

became commercially available in North America in the late 1980s and have well over 5,000 stationary engine installations in service today.[19]

Step 2 – Technical Feasibility Analysis

Technical feasibility of the potential control options is evaluated below.

- **Wet Injection.** Wet injection, although less effective for gas firing than other combustion systems (e.g., DLN combustors), is considered technically feasible; however, in modern combined-cycle units, wet injection is only used with oil firing, which is not proposed for the Project. Since wet injection is not used in modern gas-fired combined-cycle units and since DLN combustors would provide an equivalent or higher level of control, wet injection is not carried forward for further analysis.
- **DLN Combustors.** DLN combustors are available, demonstrated, and technically feasible for units in either simple cycle or combined cycle configuration. The DLN combustion technology alone can achieve 9 ppm (corrected to 15-percent O_2 dry conditions) when firing natural gas.
- **SCR.** SCR has been demonstrated successfully in numerous applications and is considered technically feasible for the proposed combined-cycle units.
- **NO_xOUT.** As discussed previously, commercial application of the NO_xOUT system is limited mainly to boilers, and the NO_xOUT ULTRA system has not been commercially operated on any large combined-cycle gas turbine unit; therefore, these technologies are not considered available or technically feasible. Even if the NO_xOUT process were technically feasible for the proposed project, the operating temperature range of the combined-cycle exhaust is below the NO_xOUT application temperature of 1,600 to 1,950°F. The maximum exhaust gas temperature of the gas turbines considered for the Project is below 1,100°F. Raising the exhaust temperature to the required amount would require installation of a natural gas-fired heater. This would be economically prohibitive and would result in an increase in fuel consumption, an increase in the volume of gases that must be treated by the control system, and an increase in uncontrolled air emissions, including NO_x.
- **Thermal DeNO_x.** As discussed previously, there are no known applications of the Thermal DeNO_x technology to combined-cycle units. Since this technology has not been demonstrated for combined-cycle units, it is not considered available or technically feasible. Additionally, even if this technology were technically feasible, the operating temperatures for the Thermal DeNO_x technology (approximately 1,800°F) would require higher-temperature alloy materials constructed with very large piping and components since the exhaust gas volume would be increased significantly. As with the NO_xOUT process, high capital, operating, and maintenance costs would be expected because of material requirements, a natural gas-fired exhaust heating system, and fuel consumption. Uncontrolled emissions would increase because of the additional fuel burning.

[19] Description for NSCR, Institute of Clean Air Companies. Typical Installation Timelines for NO_x Emissions Control Technologies on Industrial Sources, December 2006.

- **SNCR.** Because the exhaust temperatures from the proposed combined-cycle units typically will not approach the operating temperature window for SNCR, this technology is not technically feasible for this application. The combustion turbine exhaust temperature is typically around 1,100°F, and the temperature at the exhaust stack downstream of the HRSG is expected to range between approximately 150 and 290°F, which are far below the range of SNCR application. Further, a review of EPA's RBLC database and discussions with control technology vendors do not indicate that SNCR systems have been successfully installed for combined cycle gas turbines. Based on the above limitations (i.e., operating temperature range and lack of actual application to combined-cycle units), SNCR is considered technically infeasible.
- **NSCR.** As discussed previously, the NSCR process requires low-O_2 content in the exhaust gas stream in order to be effective. Combined-cycle unit exhaust streams have high O_2 levels (greater than 12-percent); and therefore, cannot use the NSCR process. As a result, NSCR is not a technically feasible add-on NO_x control device for combined-cycle units.
- **SCONO$_x$™.** The SCONO$_x$™ control technology is not considered available (and therefore is considered technically infeasible) since it has not been commercially demonstrated on large combined-cycle units. The units planned for the Project are Siemens SGT6-5000F engines that have a nominal generating capacity of 200 MW, approximately four times larger than the 45-MW (Alstom GTX100 turbine) installation at the City of Redding Municipal Electric Plant. Technical problems associated with scale-up of the SCONO$_x$™ technology are unknown given the large differences in machine flow rates. Additional concerns with the SCONO$_x$™ control technology include process complexity (multiple catalytic oxidation / absorption / regeneration systems), reliance on only one supplier, and relatively brief operating history of the technology.
- **XONON™.** While the XONON™ catalytic combustion system is applied directly to the combustion turbine, application on a large combined-cycle unit has not been demonstrated. For this reason, the XONON™ technology is not considered available since the technology is still in the commercial demonstration stage. Thus, XONON™ is technically infeasible for combined-cycle units.

Based on the preceding discussion, the following technologies are considered technically feasible and are carried forward for further analysis:

- DLN Combustors; and
- SCR.

Step 3 – Rank Control Technologies by Control Effectiveness

DLN combustors and SCR are compatible technologies and considered together, is the best control strategy for the control of NO_x; thus, a ranking is not required to establish the top technology. Next,

the energy, environmental, and economic impacts of the control options are listed in accordance with EPA guidance:

- **Energy Impacts.** DLN combustors are inherent to the combustion process and do not create any energy impacts. The SCR technology would require additional auxiliary power to overcome the draft loss across the catalyst, to supply hot dilution air for mixing with the NH_3, and to pump NH_3 into the vaporizer.
- **Environmental Impacts.** Properly tuned DLN combustors do not create negative environmental impacts since these systems are designed and operated to achieve the optimum balance between CO and NO_x emissions. SCR requires the storage and use of NH_3, which can cause environmental consequences if not handled and stored properly. NH_3 for the SCR can be in either liquid form or created from solid urea. If liquid NH_3 is used, storage of this substance may trigger requirements as specified by the OSHA and the Community Right-to-Know Act. NH_3 slip (i.e., unreacted NH_3 emitted from the stack) is typically 9 ppm or less but has the potential to increase with increasing NH_3 feed rates. Additionally, during the life of the Project, the catalyst would require periodic regeneration or replacement. The used catalyst would be returned to the catalyst supplier for regeneration or would be disposed of in accordance with all applicable regulations.
- **Economic Impacts.** DLN combustors are part of the standard design of modern combined-cycle units and do not create any economic impacts. The cost of control using SCR has been presented by EPA as $3,000 to $6,000 per ton of NO_x removed.[20]

Step 4 – Evaluate the Most Effective Controls

DLN combustors and SCR, together, is the top control technology. There are no energy, economic, or environmental impacts that would preclude the selection of DLN combustors and SCR as NO_x BACT for the combined-cycle units at the Project.

Step 5 – Select BACT

Live Oaks proposes DLN combustors and SCR as BACT for the combined-cycle units, with a NO_x BACT limit of 2.5 ppmvd, corrected to 15-percent O_2, on a 24-hour averaging period.

BACT/LAER determinations for NO_x emissions from the natural gas-fired combined-cycle CTs are listed in Table 4-1. This list includes permit limits from EPA's RBLC database and recent NNSR decisions and permits researched by Golder Associates Inc. (Golder) in the region. As shown, the NO_x emissions concentration permitted as BACT over the period of last three years range between 2

[20] U.S. EPA, document no. EPA-452/F-03-019: *Air Pollution Control Technology Fact Sheet – Selective Catalytic Reduction (SCR)*, p. 2.

and 3.5 ppmvd corrected at 15-percent O_2 depending on type of CT, project size, etc. However, all determinations are based on DLN and SCR.

Uncontrolled NO_x emissions of the proposed Siemens SGT6-5000F CTs are 25 ppmvd and Live Oaks proposes to control the NO_x emissions by 90-percent using SCR to a level of 2.5 ppmvd. Several BACT determinations have been made to control the NO_x emissions to 2 ppmvd and some of these projects are complete and NO_x concentrations demonstrated. However, most of these demonstrated projects are for CTs with guaranteed uncontrolled NO_x concentrations less than 25 ppmvd. One Siemens SGT6 turbine has recently been permitted for Kleen Energy Systems in CT with a proposed NO_x concentration limit of 2 ppmvd, however the facility has not been constructed yet.

Georgia EPD has issued about 8 permits for natural gas-fired CTs since 2001 and have established BACT for NO_x emissions from these CTs as DLN and/or SCR with stack NO_x concentration of 2.5 ppmvd or higher. The BACT and the stack NO_x concentration for the CTs of the proposed Project are consistent with the Georgia EPD determinations.

4.5.2 CO and VOC

Step 1 - Identification of CO and VOC Control Technologies

CO and VOC emissions are a result of incomplete or partial combustion of fossil fuel. Combustion design and catalytic oxidation are the control alternatives that are viable for the project. LAER/BACT decisions for CO emissions from combined-cycle units can be found in EPA Region 4's National Combustion Turbine spreadsheet. The EPA's RBLC database was also queried and a summary of CO BACT determinations for natural gas-fired combined-cycle units is presented in Table 4-2.

The following control options are evaluated in the BACT analysis.

Combustion Controls

CO and VOC emissions are generated from the incomplete combustion of carbon in the fuel and organic compounds. Optimization of the combustion chamber designs and operation practices that improve the oxidation process and minimize incomplete combustion is the primary mechanism available for lowering CO and VOC emissions. This process is often referred to as combustion controls. Combined-cycle unit combustors typically have high combustion temperature. As a result CO and VOC emissions from the combined-cycle units are inherently low.

Oxidation Catalyst

Catalytic oxidation technology is primarily designed to reduce CO emissions (VOC emissions are also reduced to a lesser extent). Oxidation catalysts operate at elevated temperatures. In the presence of an oxidation catalyst, excess O_2 in the exhaust reacts with CO to form CO_2. No chemical reagent is necessary. The oxidation catalyst is typically a precious metal catalyst. None of the catalyst components is considered toxic.

Oxidation catalysts are susceptible to fine particles suspended in the exhaust gases that can foul and poison the catalyst. Catalyst poisoning reduces catalyst activity and pollutant removal efficiencies. The most effective oxidation of CO and VOC emissions is achieved if the catalyst bed is located prior to the HRSG in the high temperature region.

$SCONO_x$™ Process

$SCONO_x$™ system previously described in Section 4.5.1 also controls CO. The $SCONO_x$™ system employs a single catalyst to simultaneously oxidize CO to CO_2 and NO to NO_2. The $SCONO_x$™ operates at a temperature range of 300 to 700°F and, therefore, must be installed in the appropriate temperature section of a HRSG.

Step 2 – Technical Feasibility Analysis

Technical feasibility of the potential control options is evaluated below:

- **Combustion Controls.** Combustion controls have been applied successfully on combined-cycle units similar to those proposed for the Project and are considered technically feasible.
- **Oxidation Catalyst.** Oxidation catalyst technology has been applied successfully on combined-cycle units similar to those proposed for the project and is considered technically feasible.
- **$SCONO_x$™.** As described in the BACT evaluation for NO_x in Section 4.5.1 the application of the $SCONO_x$™ system is limited to a few small turbines with no systems installed on large gas turbines similar to the ones proposed for the Project. Therefore, $SCONO_x$ is considered to be not technically feasible for the Project.

Step 3 – Rank Control Technologies by Control Effectiveness

Combustion controls and oxidation catalyst are compatible technologies and considered together in combination, is the top control option for CO and VOC; thus, a ranking is not required to establish the top technology. Next, the energy, environmental, and economic impacts of the control options are listed in accordance with EPA guidance:

- **Energy Impacts.** Combustion controls are inherent to the combustion process and do not create any energy impacts. The oxidation catalyst technology would require a nominal amount of auxiliary power to overcome the draft loss across the catalyst.
- **Environmental Impacts.** Combustion controls do not create negative environmental impacts since these systems are designed and operated to achieve the optimum balance between CO/VOC and NO_x emissions. During the life of the Project, the oxidation catalyst would require periodic regeneration or replacement. The used catalyst would be returned to the catalyst supplier for regeneration or would be disposed of in accordance with all applicable regulations.
- **Economic Impacts.** Combustion controls are part of the standard design of modern combined-cycle units and does not create any economic impacts. The cost of control using oxidation catalyst has been presented by EPA as $100 to $5,000 per ton of VOC removed.[21]

Step 4 – Evaluate the Most Effective Controls

There are no energy, environmental, or economic impacts that would preclude the use of combustion controls and oxidation catalyst for the proposed combined-cycle units.

Step 5 – Select BACT

Live Oaks proposes to use combustion controls and oxidation catalyst as BACT for CO and VOCs.

The proposed BACT emissions limits for the Project are listed below:

- CO – 2.0 ppmvd corrected to 15-percent O_2 (without duct firing) and 3.0 ppmvd corrected to 15-percent O_2 (with duct firing);
- VOC – 1.0 ppmvd corrected to 15-percent O_2 (without duct firing) and 7.4 ppmvd corrected to 15-percent O_2 (with duct firing), each on a 3-hour averaging period.

The proposed BACT determination (that is, combustion controls with oxidation catalyst) is consistent with the most stringent control technology for natural gas fired combined-cycle units found in the EPA's RBLC database (see Table 4-2).

[21] U.S. EPA, document no. EPA-452/F-03-018: *Air Pollution Control Technology Fact Sheet – Catalytic Incinerator (SCR)*, p. 2.

4.5.3 PM/PM_{10}/$PM_{2.5}$

Step 1 - Identify All Control Technologies

A small amount of particulate matter (PM including PM_{10} and $PM_{2.5}$) results from the combustion of natural gas in the combined-cycle units. The following control options are evaluated in the PM BACT analysis:

Combustion Controls

PM emissions from natural gas combustion are inherently low, and combustion controls can further minimize the amount of PM emissions generated due to incomplete combustion in the combined-cycle units. Optimization of the combustion chamber designs and operation practices that improve the oxidation process and minimize incomplete combustion is the primary mechanism available for lowering emissions. This process is often referred to as combustion controls.

Pipeline Quality Natural Gas

One mechanism for the formation of particulate is the oxidation of sulfur compounds, which can precipitate as particulate matter in the exhaust stream. Pipeline quality natural gas contains very low levels of sulfur; thus, emissions of sulfur and the resulting PM are minimized through the use of this clean-burning fuel.

Fabric Filter Baghouse

A fabric filter baghouse removes particles and condensed metals from a flue gas stream by drawing dust-laden flue gas and condensables through a bank of filter tubes suspended in a housing. A filter cake, composed of the removed particulate, builds up on the "dirty" side of the bag. Periodically, the cake is removed through physical mechanisms (e.g., blast of compressed air from the clean side of the bag, mechanical shaking of the bags, etc.), which causes the cake to fall. The dust is then collected in a hopper and removed.

Electrostatic Precipitator

An electrostatic precipitator (ESP) removes dust or other fine particles from a flue gas stream by charging the particles inductively with an electric field and then attracting the particles to highly charged collector plates, from which they are removed. An ESP consists of a hopper-bottomed box containing rows of plates forming passages through which the flue gas flows. Centrally located in each passage are emitting electrodes energized with a high-voltage, negative polarity direct current. The voltage applied is high enough to ionize the gas molecules close to the electrodes, resulting in a corona current of gas ions from the emitting electrodes across the gas passages to the grounded

collecting plates. When passing through the flue gas, the charged ions collide with, and attach themselves to, fly ash particles suspended in the gas. The electric field forces the charged particles out of the gas stream towards the grounded plates, and there they collect in a layer. The plates are periodically cleaned by a rapping system to release the ash layer into ash hoppers as an agglomerated mass.

Wet Electrostatic Precipitator

A wet electrostatic precipitator (WESP) operates in the same three-step process as a dry ESP: charging, collection, and removal. Unlike with a dry ESP; however, with a WESP, the removal of particles from the collecting electrodes is accomplished by washing the collection surface using liquid, rather than mechanically rapping the collector plates. WESPs are more widely used in applications where the gas stream has a high moisture content, is below the dew point, or includes "sticky" particulate.

Wet Scrubber

Wet scrubbers trap suspended particles by direct contact with a spray of water or other liquid. In effect, a scrubber washes the particulates out of the dirty airstream as they collide with and are entrained by the tiny droplets in the spray. Several configurations of wet scrubbers are in use. In a spray-tower scrubber, an upward-flowing airstream is washed by water sprayed downward from a series of nozzles. The water is re-circulated after it is sufficiently cleaned to prevent clogging of the nozzles. In orifice scrubbers and wet-impingement scrubbers, the air and droplet mixture collides with a solid surface. Collision with a surface atomizes the droplets, reducing droplet size and thereby increasing total surface contact area. These devices have the advantage of lower water-recirculation rates.

Scrubber efficiency depends on the relative velocity between the droplets and the particulates. Venturi scrubbers achieve high relative velocities by injecting water into the throat of a venturi channel-a constriction in the flow path-through which particulate-laden air is passing at high speed. As a result, Venturi scrubbers are the most efficient of the wet collectors.

Step 2 - Technical Feasibility Analysis

Technical feasibility of the potential control options is evaluated below.

- **Combustion Controls.** Combustion controls have been applied successfully on combined-cycle units similar to those proposed for the Project and are considered technically feasible.

- **Pipeline Quality Natural Gas.** Pipeline quality natural gas is available and feasible for use at the Project.
- **Add-On Controls.** Add-on control devices (including fabric filtration, ESP, WESP, and wet scrubbers) are not technically feasible for the combined-cycle units because of high volumes of airflow, fine particulate distribution, and inherently low uncontrolled PM_{10} emission rates. Consistent with this position and based on the information in EPA's RBLC database, no natural gas-fired combined-cycle unit has been equipped with an add-on control device.

Step 3 – Rank Control Technologies by Control Effectiveness

Since combustion controls and the use of pipeline quality natural gas are compatible control strategies, these strategies are considered together in combination for the control of PM_{10}; thus, a ranking is not required to establish the top technology. Next, the energy, environmental, and economic impacts of the control options are listed in accordance with EPA guidance.

- **Energy Impacts.** Combustion controls and pipeline quality natural gas are inherent to the combustion process and do not create any energy impacts.
- **Environmental Impacts.** Combustion controls and pipeline quality natural gas do not create negative environmental impacts.
- **Economic Impacts.** Combustion controls are part of the standard design of modern combined-cycle units and does not create any economic impacts. Pipeline quality natural gas is available in close proximity to the site and is not expected to create any adverse economic impacts.

Step 4 – Evaluate the Most Effective Controls

There is no energy, environmental, or economic impacts that would preclude the use of combustion controls and pipeline quality natural gas for the proposed combined-cycle units.

Step 5 – Select BACT

Live Oaks proposes to use combustion controls and pipeline quality natural gas fuel as BACT for PM_{10} emissions. The proposed BACT emissions limits for are listed below:

$PM/PM_{10}/PM_{2.5}$ (total) – 10.3 lb/hr (without duct firing) and 12.6 lb/hr (with duct firing).

The proposed BACT determination (that is, combustion controls and pipeline quality natural gas) is consistent with the most stringent control technology for natural gas fired combined-cycle units found in EPA's RBLC database (see Table 4-3).

4.5.4 SO_2 and H_2SO_4

Step 1 - Identification of SO_2 and H_2SO_4 Control Technologies

SO_2 is generated during the combustion process as a result of the thermal oxidation of the sulfur contained in the fuel. While the SO_2 generally remains in a gaseous phase throughout the flue gas flow path, a small portion of the SO_2 may be oxidized to SO_3. The SO_3 can subsequently combine with water vapor to form H_2SO_4. Technologies employed to control SO_2 and H_2SO_4 mist emissions from combustion sources consist of fuel treatment and post-combustion add-on controls that rely on chemical reactions within the control device to reduce the concentration of SO_2 in the flue gas [also referred to as flue gas desulfurization (FGD) systems].

EPA's RBLC database was queried and a summary of SO_2 BACT determinations for natural gas-fired combined-cycle units is presented in Table 4-4.

Fuel Treatment

Fuel treatment technologies are applied to gaseous, liquid, and solid fuels to reduce their sulfur contents prior to delivery to the end user. The fuel proposed for the Project combined-cycle units is natural gas only. Desulfurization of natural gas is performed by the fuel supplier prior to distribution by pipeline. The sulfur content of pipeline quality natural gas is typically 20 grains per 100 SCF or less.

Pipeline Quality Natural Gas

Pipeline quality natural gas contains very low levels of sulfur; thus, emissions of sulfur compounds are minimized through the use of this clean-burning fuel.

Flue Gas Desulfurization

FGD systems are post-combustion control technologies that rely on chemical reactions within the control device to reduce the concentration of SO_2 in the flue gas. The chemical reaction with an alkaline chemical, which can be performed in a wet or dry contact system, converts the SO_2 to sulfite or sulfate salts. The following FGD systems are discussed:

Wet Scrubber

The wet scrubber is a once-through wet technology. In a wet scrubber system, a reagent is slurried with water and sprayed into the flue gas stream in an absorber vessel. The SO_2 is removed from the flue gas by sorption and reaction with the slurry. The by-products of the sorption and reaction are in a wet form upon leaving the system and must be dewatered prior to transport/disposal.

The wet scrubber can be further classified on the basis of the reagents used and the by-products generated. The typical reagents are lime and limestone. Additives, such as magnesium, may be added to the lime or limestone to increase the reactivity of the reagent. Seawater has also been used as a reagent since it has a high concentration of dissolved limestone. The reaction by-products are calcium sulfite and/or calcium sulfate. The calcium sulfite to calcium sulfate reaction is a result of oxidation, which can be inhibited or forced depending on the desired by-product. The most common wet scrubber application utilizes limestone as the reagent and forced oxidation of the reaction by-products to form calcium sulfate.

Spray Dryer Absorber

The spray dry scrubber (dry scrubber) is a once-through dry technology. In a dry scrubber system, lime, the reagent, is slurried with water and sprayed into the flue gas stream in an absorber vessel. The SO_2 is removed from the flue gas by sorption and reaction with the slurry. The by-products of the sorption and reaction are in a dry form upon leaving the system and are subsequently captured in a downstream particulate collection device, typically a baghouse.

Step 2 - Technical Feasibility Analysis

Technical feasibility of the potential control options is evaluated below.

- **Fuel Treatment.** The sulfur content in pipeline quality natural gas, which is treated by the fuel supplier prior to distribution, is already very low, and additional fuel treatment by the end user is considered technically infeasible.
- **Pipeline Quality Natural Gas.** Pipeline quality natural gas is available and feasible for use at the Project.
- **Flue Gas Desulfurization.** The removal efficiency of a FGD system decreases with decreasing inlet SO_2 concentration. FGD technology has been shown to function efficiently on emissions streams with relatively high uncontrolled sulfur levels (for example, for boilers firing high-sulfur coal); however, there have been no applications of FGD technology to natural gas-fired combined-cycle units because the natural gas fuel results in very low sulfur emissions. This is consistent with the EPA RBLC database summary presented in Table 4-4. As a result, the FGD technology is not considered to be technically feasible for combined-cycle units.

Step 3 – Rank Control Technologies by Control Effectiveness

The third step in the BACT analysis is to evaluate the effectiveness of the remaining control technologies. The remaining control strategy is the use of pipeline quality natural gas, which is not associated with negative energy, environmental, or economic impacts.

Step 4 – Evaluate the Most Effective Controls

There are no potential energy, environmental, or economic impacts that would preclude the use of pipeline quality natural gas in the combined-cycle units.

Step 5 – Select BACT

Live Oaks proposes to use pipeline quality natural gas as BACT for SO_2 and H_2SO_4. The proposed BACT emissions limits for SO_2 and H_2SO_4 are summarized below:

SO_2 – 0.0023 lb/MMBtu;
H_2SO_4 – 0.0005 lb/MMBtu.

4.6 Fuel Gas Heater BACT Analysis

This section contains the BACT analysis for the NO_x, CO, VOC, $PM/PM_{10}/PM_{2.5}$, SO_2, and H_2SO_4 emissions from the proposed 10 MMBtu/hr fuel gas heater for the Project. The heater will be fired by natural gas with maximum sulfur content limited to 0.8 -percent by weight.

4.6.1 NO_x

The fuel gas heater proposed for the Project will be fired with natural gas and will emit only about 5 TPY of uncontrolled NO_x.

Step 1 – Identification of NO_x Control Technologies

A list of potential NO_x control technologies for controlling NO_x emissions from the fuel gas heater are identified below.

Low NO_x Burners

Low NO_x Burners (LNB) are designed to limit NO_x formation by controlling the stoichiometric and temperature profiles of the combustion process. This control is achieved by design features that regulate the aerodynamic distribution and mixing of the fuel and air, resulting in one or more of the following conditions: (a) reduced O_2 in the primary flame zone; (b) reduced flame temperature; or (c) reduced residence time at peak temperature. Typical LNB systems incorporate lean combustion (e.g., low excess air) and a secondary burnout zone (e.g., overfire air). Since LNB designs generally incorporate elements of low excess air and overfire air while achieving better emissions performance than either technology alone, low excess air and overfire air are not considered as separate control options in this analysis.

Selective Catalytic Reduction

Selective Catalytic Reduction (SCR) is a post-combustion NO_x reduction technology and uses NH_3 to react with NO_x in the gas stream in the presence of a catalyst. The selective reaction of NH_3 with NO_x forms nitrogen and water. Depending on the manufacturer's system, the catalyst may be a packed bed of pellets, or as rigid honeycomb or plate type cubes that are assembled to form the catalyst bed. The reducing agent for SCR can be anhydrous NH_3, aqueous NH_3, or urea. The NO_x reduction reaction is effective only within a given temperature range. The optimum temperature range depends on the type of catalyst used and the flue gas composition.

Selective Non-Catalytic Reduction

Selective Non-Catalytic Reduction (SNCR) is a post-combustion control technology that reduces NO_x into nitrogen and water by reacting the flue gas with a reagent. SNCR systems can either use NH_3 or urea as reagents. The SNCR system is dependent on the reagent injector location and temperature to achieve proper reagent/flue gas mixing. The optimum temperature range for injection of NH_3 or urea is 1,550 to 1,900°F. The NO_x reduction efficiency of an SNCR system decreases rapidly at temperatures outside the optimum window. Injection of reagent below this temperature window results in excessive NH_3 emissions, while injection of reagent at temperatures greater than the temperature window results in increased NO_x emissions.

Flue Gas Recirculation

Flue gas recirculation (FGR) recirculates boiler flue gas from the boiler outlet to the furnace where is reintroduced into the combustion process. Fuel/air mixing in the combustion region is increased by the recirculated flue gas during the early stages of combustion. This increased mixing and reduction in peak flame temperatures results in lower thermal NO_x formation. The amount of NO_x reduction is dependent upon the burner and furnace design. FGR has been demonstrated as a NO_x reduction technology on natural gas and oil-fired boilers.

Step 2 – Technical Feasibility Analysis

Technical feasibility of the potential control options is evaluated below.

- **LNB.** LNBs are a proven technology for minimizing NO_x emissions and are considered technically feasible. Due to their demonstrated effectiveness and reliability, low NO_x burners have become part of the standard design for modern boiler systems.

- **SCR.** In the United States, SCR has been applied to coal- and natural gas-fired electric utility boilers ranging in size from 250 to 8,000 MMBtu/hr.[22] The fuel heater considered for the Project is rated at only 10 MMBtu/hr each. The RBLC database review results for BACT determinations for natural gas-fired fuel heaters are presented in Table 4-5. As shown, all determinations for heaters rates are based on LNB or good combustion practices only. Therefore, the SCR technology is not considered to be technically feasible for the Project's fuel gas heater.
- **SNCR.** SNCR system is dependent on the reagent injector location and temperature to achieve proper reagent/flue gas mixing. The chemical reaction for this technology is driven by high temperatures, typically from 1,550 to 1,900°F. The NO_x reduction efficiency of an SNCR system decreases rapidly at temperatures outside the optimum window. The exhaust temperature for the proposed fuel gas heater is approximately 700°F, well below the minimum SNCR operating temperature. Therefore, SNCR is not technically feasible for the Project's fuel heater.
- **FGR.** FGR is a proven technology for minimizing NO_x emissions and is considered technically feasible.

Step 3 – Rank Control Technologies by Control Effectiveness

BACT/LAER determinations for NO_x emissions from the fuel gas heater are listed in Table 4-5. This list includes permit limits from EPA's RBLC database and recent NNSR decisions and permits researched by Golder in the region. As shown, all determinations for NO_x emission control from the fuel gas heaters are based on LNB or good combustion practices.

LNB and FGR together are considered to be the best control strategy for NO_x emissions control from boilers. The next best control technology is the use of LNB alone. According to EPA's technical bulletin on NO_x control technologies[23], for a natural gas-fired process heater, control efficiency of a LNB is 50-percent and LNB and FGR together is 55-percent. So, only an additional 5-percent control is achieved by adding the FGR system with LNB. Next, the energy, environmental, and economic impacts of the control options are listed in accordance with EPA guidance.

- **Energy Impacts.** LNBs are inherent to the combustion process and do not create any energy impacts. Use of FGR places a significant burden on the boiler owner from additional brake horsepower required to pump FGR through the system. Also, FGR will cause the stack temperature to rise, yielding reduced unit efficiency from thermal losses. There is also high system loss due to increased mass flow through the boiler.[24]

---

[22] EPA's Air Pollution Control Technology fact sheet for the SCR technology, EPA-452/F-03-032.
[23] EPA Technical Bulletin, Nitrogen Oxides (NO_x), Why and How They are Controlled, November 1999. Table 16, Unit Costs for NO_x Control Technologies for Non-Utility Stationary Sources.
[24] "Cost, Safety and Performance Issues Associated with Ultra Low NO_x Burners" by Thomas E. de Haan, paper presented at the ABMA Technical Conference, West Palm Beach, FL, November 1996.

- **Environmental Impacts.** Properly tuned LNB do not create negative environmental impacts since these systems are designed and operated to achieve the optimum balance between CO and NO_x emissions. High levels of FGR can lower the limits of flammability (LOF) and small variation in air to fuel ratio can cause operation outside the LOF, which would mean flame instability and higher CO emissions.[25]
- **Economic Impacts.** There are significant economic impacts associated with both options – LNB alone and LNB+FGR. Process heaters equipped with LNBs are more expensive than conventional units. There is a cost associated with FGR installation, operation, fan maintenance, and additional energy needed to push the recirculating air through the system. There is also a cost associated with the loss of boiler efficiency. These costs are expected to rise if the FGR rate needs to be increased.

Step 4 – Evaluate the Most Effective Controls

The potential energy, environmental, and economic impacts of the control technologies are evaluated below.

- **Energy Impacts.** As discussed above there are adverse energy impacts associated with the FGR system and none with the LNB systems.
- **Environmental Impacts.** There are no environmental impacts expected from LNB. However, there is a potential of increased CO emissions for the FGR system.
- **Economic Impacts.** There are significant economic impacts associated with both control options for the fuel heater – LNB alone and LNB and FGR together. Based on EPA's technical bulletin on NO_x control technologies,[26] NO_x control cost-effectiveness of a natural gas-firing process heater using LNB alone is in excess of $5,000/ton and LNB+FGR is in excess of $7,500/ton in 1990 dollars. This cost is very high for the fuel gas heater proposed for the Project, which has the potential to emit only 0.3 TPY of uncontrolled NO_x.

Based on the energy, environmental, and significant economic impacts, either option – LNB alone or LNB and FGR together is not selected as BACT.

Step 5 – Select BACT

Live Oaks proposes good combustion practices, which includes maintaining the air/fuel ratio at the specified design point, having the proper air and fuel conditions at the burner, and maintaining the fuel gas heater in proper working condition as BACT for NO_x emissions. A NO_x BACT limit of

[25] Safety, reliability and performance of FGR, from the paper "Cost, Safety and Performance Issues Associated with Ultra Low NO_x Burners" by Thomas E. de Haan, paper presented at the ABMA Technical Conference, West Palm Beach, FL, November 1996.

[26] EPA Technical Bulletin, Nitrogen Oxides (NO_x), Why and How They are Controlled, November 1999. Table 16, Unit Costs for NO_x Control Technologies for Non-Utility Stationary Sources.

0.035 lb/MMBtu is proposed. This is also consistent with the most stringent control technology for small natural gas fired fuel heaters found in EPA's RBLC database.

4.6.2 SO_2 and H_2SO_4

Step 1 - Identification of SO_2 and H_2SO_4 Control Technologies

SO_2 is generated during the combustion process as a result of the thermal oxidation of the sulfur contained in the fuel. While the SO_2 generally remains in a gaseous phase throughout the flue gas flow path, a small portion of the SO_2 may be oxidized to SO_3. The SO_3 can subsequently combine with water vapor to form H_2SO_4. Technologies employed to control SO_2 and H_2SO_4 mist emissions from combustion sources consist of fuel treatment and post-combustion add-on controls that rely on chemical reactions within the control device to reduce the concentration of SO_2 in the flue gas (also referred to as FGD systems).

EPA's RBLC database was queried and a summary of SO_2 BACT determinations for fuel gas heaters is presented in Table 4-5.

Fuel Treatment

Fuel treatment technologies are applied to gaseous, liquid, and solid fuels to reduce their sulfur content prior to delivery to the end user. The fuel proposed for the Project's fuel gas heater is pipeline-quality natural gas. Desulfurization of natural gas is performed by the fuel supplier prior to distribution by pipeline. The sulfur content of pipeline quality natural gas is typically 20 grains per 100 SCF or less. Maximum sulfur content proposed for the natural gas to be used for the Project is 0.8-percent.

Pipeline Quality Natural Gas

Pipeline quality natural gas contains very low levels of sulfur. The natural gas proposed for the fuel heaters is limited to 0.8-percent sulfur, and therefore, emissions of sulfur compounds are being minimized through the use of this clean-burning fuel.

Add-On Control Technologies

The sulfur content of the natural gas fuel to be used for the fuel gas heater is very low. Based on the review of the RBLC database presented in Table 4-5, no add-on SO_2 controls have been installed on a fuel heater firing natural gas. Therefore, add-on controls are not considered for the fuel gas heater of the Project.

Step 2 - Technical Feasibility Analysis

Technical feasibility of the potential control options is evaluated below:

- **Fuel Treatment.** The sulfur content in pipeline quality natural gas, which is treated by the fuel supplier prior to distribution, is already very low, and additional fuel treatment by the end user is considered technically infeasible.
- **Pipeline Quality Natural Gas.** Pipeline quality natural gas is available and feasible for use at the Project.
- **Add-on Controls.** Add-on controls are not a demonstrated technology for natural gas-fired fuel heaters and are not considered.

Step 3 – Rank Control Technologies by Control Effectiveness

The third step in the BACT analysis is to evaluate the effectiveness of the remaining control technologies. The remaining control strategy is the use of pipeline quality natural gas, which is not associated with negative energy, environmental, or economic impacts.

Step 4 – Evaluate the Most Effective Controls

There are no potential energy, environmental, or economic impacts that would preclude the use of pipeline quality natural gas in the fuel gas heater.

Step 5 – Select BACT

Live Oaks proposes to use pipeline quality natural gas as BACT for SO_2 and H_2SO_4 emissions from the fuel gas heater. The proposed BACT emissions limit for SO_2 from the fuel gas heater is 0.0022 lb/MMBtu and for H_2SO_4 it is 0.0005 lb/MMBtu.

4.6.3 CO and VOC

Step 1 – Identification of CO and VOC Control Technologies

CO and VOC emissions are a result of incomplete thermal oxidation of carbon contained within the fuel. Properly designed and operated boilers typically emit low levels of CO and VOC. High levels of CO and VOC emissions could result from poor burner design or sub-optimal firing conditions.

The following control options are evaluated in the BACT analysis.

Combustion Controls

CO and VOC emissions are generated from the incomplete combustion of carbon in the fuel and organic compounds. Optimization of the combustion chamber designs and operation practices that improve the oxidation process and minimize incomplete combustion is the primary mechanism

available for lowering CO and VOC emissions. This process is often referred to as combustion controls. The combustion system design on modern boilers provides all of the factors required to facilitate complete combustion. These factors include continuous mixing of air and fuel in the proper proportions, extended residence time, and consistent high temperatures in the combustion chamber. As a result, CO and VOC emissions from a properly designed boiler are inherently low.

Proper operation and maintenance of the combustion system helps to minimize the formation and emission of CO by ensuring that the combustion system operates as designed. This includes maintaining the air/fuel ratio at the specified design point, having the proper air and fuel conditions at the burner, and maintaining the combustion air control system in proper working condition.

Oxidation Catalyst

Catalytic oxidation technology is primarily designed to reduce CO emissions (VOC emissions are also reduced to a lesser extent). Oxidation catalysts operate at elevated temperatures. In the presence of an oxidation catalyst, excess O_2 in the exhaust reacts with CO to form CO_2. No chemical reagent is necessary. The oxidation catalyst is typically a precious metal catalyst. None of the catalyst components is considered toxic.

Oxidation catalysts are susceptible to fine particles suspended in the exhaust gases that can foul and poison the catalyst. Catalyst poisoning reduces catalyst activity and pollutant removal efficiencies. The catalytic oxidation of CO in the combustion gases to CO_2 takes place in temperatures ranging from 500 to 700°F.

External Thermal Oxidation

External Thermal Oxidation (ETO) promotes thermal oxidation of the CO in the flue gas stream in a location external to the boiler. ETO requires heat (1,400 to 1,600°F) and O2 to convert CO in the flue gas to CO_2. There are two general types of ETO that are used for the control of CO emissions: regenerative thermal oxidization and recuperative thermal oxidization. The primary difference between regenerative and recuperative ETO is that regenerative ETO utilizes a combustion chamber and ceramic heat exchange canisters that are an integral unit, while recuperative ETO utilizes a separate counter-flow heat exchanger to preheat incoming air prior to entering the combustion chamber.

Step 2 - Technical Feasibility Analysis

Technical feasibility of the potential control options is evaluated below.

- **Combustion Controls.** Recent CO and VOC BACT determinations for fuel heaters are shown in Table 4-5. As shown, combustion controls, which include combustion system design and proper boiler operation and maintenance, have been applied to all the determinations. It is a demonstrated technology and is considered technically feasible.
- **Oxidation Catalyst.** Oxidation catalyst technology has been applied successfully on gas turbine units. However, based on Table 4-5, oxidation catalyst is not a demonstrated technology for natural gas-fired boilers.
- **ETO.** ETO is generally utilized for controlling CO, VOC, or organic HAP emissions from high-concentration, non-combustion sources (e.g., surface coating operations and chemical plants). Based on the RBLC database review results presented in Table 4-5, ETO is not a demonstrated technology for natural gas-fired auxiliary boilers. Therefore, ETO is determined to be technically infeasible.

Step 3 – Rank Control Technologies by Control Effectiveness

The only CO and VOC control technology considered technically feasible for the natural gas-fired auxiliary boiler is combustion controls. The energy, environmental, and economic impacts associated with combustion controls are listed in accordance with EPA guidance:

- **Energy Impacts.** Combustion controls are inherent to the combustion process and do not create any energy impacts.
- **Environmental Impacts.** Combustion controls do not create negative environmental impacts since these systems are designed and operated to achieve the optimum balance between CO/VOC and NO_x emissions.
- **Economic Impacts.** Combustion controls is part of the standard design of modern boilers and does not create any economic impacts.

Step 4 – Evaluate the Most Effective Controls

There are no energy, environmental, or economic impacts that would preclude the use of combustion controls for the proposed fuel gas heater.

Step 5 – Select BACT

Live Oaks proposes to use combustion controls as BACT for CO and VOC emissions from the fuel gas heater.

4.6.4 $PM/PM_{10}/PM_{2.5}$

Step 1 - Identification of Particulate Matter Control Technologies

A small amount of particulate matter results from the combustion of natural gas in the fuel gas heater. The 10-MMBtu/hr fuel gas heater proposed for the Project emits less than 1 TPY of $PM/PM_{10}/PM_{2.5}$ emissions. The following control options are evaluated in the particulate matter BACT analysis:

Combustion Controls

Particulate matter emissions from natural gas combustion are inherently low, and combustion controls can further minimize the amount of particulate matter emissions generated due to incomplete combustion in the boilers. Optimization of the combustion chamber designs and operation practices that improve the oxidation process and minimize incomplete combustion is the primary mechanism available for lowering emissions. This process is often referred to as combustion controls. The combustion system design on modern boilers provides all of the factors required to facilitate complete combustion. These factors include continuous mixing of air and fuel in the proper proportions, extended residence time, and consistent high temperatures in the combustion chamber.

Pipeline Quality Natural Gas

One mechanism for the formation of particulate is the oxidation of sulfur compounds, which can precipitate as particulate matter in the exhaust stream. Pipeline quality natural gas contains very low levels of sulfur; thus, emissions of sulfur and the resulting particulate matter are minimized through the use of this clean-burning fuel. The fuel proposed for the Project's fuel gas heater is pipeline quality natural gas with a maximum sulfur content of 0.8-percent.

Fabric Filter Baghouse

A fabric filter baghouse removes particles and condensed metals from a flue gas stream by drawing dust-laden flue gas and condensables through a bank of filter tubes suspended in a housing. A filter cake, composed of the removed particulate, builds up on the "dirty" side of the bag. Periodically, the cake is removed through physical mechanisms (e.g., blast of compressed air from the clean side of the bag, mechanical shaking of the bags, etc.), which causes the cake to fall. The dust is then collected in a hopper and removed.

Wet Scrubber

Wet scrubbers trap suspended particles by direct contact with a spray of water or other liquid. In effect, a scrubber washes the particulates out of the dirty airstream as they collide with and are entrained by the tiny droplets in the spray. Several configurations of wet scrubbers are in use. In a spray-tower scrubber, an upward-flowing airstream is washed by water sprayed downward from a series of nozzles. The water is re-circulated after it is sufficiently cleaned to prevent clogging of the nozzles. In orifice scrubbers and wet-impingement scrubbers, the air and droplet mixture collides with a solid surface. Collision with a surface atomizes the droplets, reducing droplet size and thereby increasing total surface contact area. These devices have the advantage of lower water-recirculation rates.

Scrubber efficiency depends on the relative velocity between the droplets and the particulates. Venturi scrubbers achieve high relative velocities by injecting water into the throat of a venturi channel-a constriction in the flow path-through which particulate-laden air is passing at high speed. As a result, venturi scrubbers are the most efficient of the wet collectors.

Step 2 - Technical Feasibility Analysis

Technical feasibility of the potential control options is evaluated below.

- **Combustion Controls.** Recent PM/PM_{10} determinations for fuel heaters are shown in Table 4-5. As shown, combustion controls, which include combustion system design and proper boiler operation and maintenance, have been applied to all the determinations. It is a demonstrated technology and is considered technically feasible.
- **Pipeline Quality Natural Gas.** Pipeline quality natural gas is available and feasible for use at the Project.
- **Add-on Controls.** Add-on control devices (including fabric filtration and wet scrubbers) are not technically feasible for the fuel gas heater because of inherently low uncontrolled PM emission rates. Consistent with this position and based on the information in EPA's RBLC database presented in Table 4-5, no natural gas-fired combined-cycle unit has been equipped with an add-on control device.

Step 3 – Rank Control Technologies by Control Effectiveness

Combustion controls and the use of pipeline quality natural gas are the only feasible control strategies and together they present the top control strategy. Next, the energy, environmental, and economic impacts of the top control option are listed in accordance with EPA guidance.

- **Energy Impacts.** Combustion controls are inherent to the combustion process and do not create any energy impacts. Use of pipeline quality natural gas has no adverse energy impacts.
- **Environmental Impacts.** Combustion controls and us of pipeline quality natural gas do not create negative environmental impacts.
- **Economic Impacts.** Combustion control is part of the standard design of modern combined-cycle units and do not create any economic impacts. Pipeline quality natural gas is available in close proximity to the site and is not expected to create any adverse economic impacts.

Step 4 – Evaluate the Most Effective Controls

There are no energy, environmental, or economic impacts that would preclude the use of combustion controls and pipeline quality natural gas for the proposed fuel heater.

Step 5 – Select BACT

Live Oaks proposes to use combustion controls and pipeline quality natural gas fuel as BACT for $PM/PM_{10}/PM_{2.5}$ emissions from the fuel gas heater. The proposed BACT emissions limit for $PM/PM_{10}/PM_{2.5}$ from the fuel gas heater is 0.0061 lb/MMBtu (filterable).

The proposed BACT determination (that is, combustion controls and pipeline quality natural gas) is consistent with the most stringent control technology for natural gas-fired fuel heaters found in EPA's RBLC database.

4.7 Emergency Engines (Emergency Generator and Fire Water Pump) BACT Analysis

This section contains the BACT analysis for the NO_x, CO, VOC, $PM/PM_{10}/PM_{2.5}$, SO_2, and H_2SO_4 emissions from the emergency engines – 600-kW emergency generator and 310-brake horse power (bhp) emergency fire water pump. The emergency engines will be fired by low-sulfur diesel fuel. Other than plant emergency situations, the engines will be operated for routine testing, maintenance, and inspection purposes. Maximum operation is limited to 500 hr/yr for each.

4.7.1 NO_x

Step 1 – Identification of NO_x Control Technologies

In general, there are a limited number of technically-feasible pollution control technologies that are commercially available for internal combustion engines. In practice, the high temperature and relatively low volumetric flow of the engine exhaust eliminates most post-combustion controls. Two general types of control options have been identified for NO_x emissions from emergency engines – combustion controls and add-on controls such as SCR and NSCR.

Combustion Controls

Combustion control is implemented in the design of the internal combustion engine. Typical design features include an electronic fuel/air ratio and timing controllers, pre-chamber ignition, intercoolers, and lean-burn fuel mix. Currently available new engines include these features as standard equipment.

Selective Catalytic Reduction

SCR is a post-combustion NO_x reduction technology and uses NH_3 to react with NO_x in the gas stream in the presence of a catalyst. NH_3 and NO_x react to form nitrogen and water. The NO_x reduction reaction is effective only within a given temperature range. The optimum temperature

range depends on the type of catalyst used and the flue gas composition. Optimum temperatures vary from 480°F to 800°F.[27] Typical catalyst material is titanium dioxide, tungsten trioxide, or vanadium pentoxide.

Non-Selective Catalytic Reduction

Similar to automobile catalytic converters, this method employs noble metal catalysts to oxidize nitrogen oxides to molecular nitrogen. The catalyst requires that exhaust have more than 0.5-percent O_2.[28] This technique uses a fuel rich mixture that, combined with back pressure from exhaust flow through the catalyst, increases the brake specific fuel consumption of the engine. The method is not feasible with lean-burn internal combustion engines.

Step 2 – Technical Feasibility Analysis

Technical feasibility of the potential control options is evaluated below.

- **Combustion Controls.** Combustion controls, which include combustion system design and proper operation and maintenance practices, have been applied successfully to diesel engines and are considered technically feasible for the emergency diesel engines.
- **SCR.** SCR is not a demonstrated NO_x control technology for emergency engines. In the United States, SCR has been applied to coal- and natural gas-fired electric utility boilers ranging in size from 250 to 8,000 MMBtu/hr. The emergency generator and the emergency fire water pump considered for the Project are rated at only 6.4 and 3 MMBtu/hr, respectively. Therefore, the SCR technology is not considered to be technically feasible for the emergency engines.
- **NSCR.** NSCR is considered to be not technically feasible due to the small size of the emergency engines and intermittent operations. The emergency engines will only operate about 2 hours a month for readiness testing and maintenance checks and up to 500 hr/yr to account for emergencies and plant startups.

Step 3 – Rank Control Technologies by Control Effectiveness

The only feasible control technology for the diesel fired emergency engines is combustion controls. BACT/LAER determinations for NO_x emissions from the emergency engines are listed in Table 4-6, which shows that combustion controls are the only technology considered for NO_x emissions from emergency engines.

[27] EPA's Air Pollution Control Technology Fact Sheet for SCR, EPA-452/F-03-032.
[28] Internal Combustion Add-On Control Technology, EPA's Technical Bulletin on NO_x, Why and How They are Controlled, November 1999.

- **Energy Impacts.** Combustion controls are inherent to the combustion process and do not create any energy impacts.
- **Environmental Impacts.** Combustion controls are designed to achieve an optimum balance between thermal efficiency-related emissions (CO and VOC) and temperature-related emissions (NO_x). By considering the optimum balance, combustion controls do not create negative environmental impacts.
- **Economic Impacts.** Combustion controls are part of the standard design of modern engines and does not create any economic impacts.

Step 4 – Evaluate the Most Effective Controls

There is no energy, economic, or environmental impacts that would preclude the selection of combustion controls as NO_x BACT for the emergency engines proposed for the Project.

Step 5 – Select BACT

Live Oaks proposes combustion controls and limited annual operating hours as BACT for the emergency engines, with a NO_x BACT limits of 0.014 lb/kW-hr and 0.0066 lb/bhp-hr for the emergency generator and the fire water pump, respectively. These limits are equivalent to the NSPS Subpart III NO_x emissions standards of 6.4 g/kW-hr and 4.0 g/kW-hr for the emergency generator and fire water pump, respectively.

4.7.2 SO_2 and H_2SO_4

Step 1 - Identification of SO_2 and H_2SO_4 Control Technologies

SO_2 is generated during the combustion process as a result of the thermal oxidation of the sulfur contained in the fuel. While the SO_2 generally remains in a gaseous phase throughout the flue gas flow path, a small portion of the SO_2 may be oxidized to SO_3. The SO_3 can subsequently combine with water vapor to form H_2SO_4.

A list of potential control technologies for SO_2 and H_2SO_4 emissions from emergency diesel engines is presented below.

Fuel Treatment

Fuel treatment technologies are applied to gaseous, liquid, and solid fuels to reduce their sulfur contents prior to delivery to the end user. The fuel proposed for the Project's emergency engines is low sulfur diesel with maximum sulfur content of 0.05-percent by weight. Because of the low sulfur content, SO_2 and H_2SO_4 emissions formed during combustion of low sulfur diesel is very low.

Add-On Control Technologies

The sulfur content of the low sulfur diesel fuel to be used for the emergency engines is very low. Based on the review of the RBLC database presented in Table 4-6, no add-on SO_2 controls have been installed on any diesel-fired emergency engines. Therefore, no add-on controls are considered for the emergency engines proposed for the Project.

Step 2 - Technical Feasibility Analysis

Technical feasibility of the potential control options is evaluated below.

- **Fuel Treatment.** The sulfur content in the low sulfur diesel is 0.05-percent by weight. Lowest sulfur content available in commercially available diesel fuel is 0.0015-percent by weight (ultra low-sulfur diesel).
- **Add-On Controls.** Add-on controls are not a demonstrated technology for diesel fuel-fired emergency engines and are not considered feasible.

Step 3 – Rank Control Technologies by Control Effectiveness

The third step in the BACT analysis is to evaluate the effectiveness of the remaining control technologies. The remaining control strategy is the use of low sulfur diesel fuel. Next, the energy, environmental, and economic impacts of the control options are listed in accordance with EPA guidance.

- **Energy Impacts.** There are no negative energy impacts associated with the use of low sulfur diesel in the emergency engines.
- **Environmental Impacts.** The diesel fuel will be stored in a storage tank and BACT will be applied to minimize emissions from the storage tank.
- **Economic Impacts.** Live Oaks proposes to use the low sulfur diesel in the emergency engines. Ultra-low sulfur diesel fuel costs more.

Step 4 – Evaluate the Most Effective Controls

There are no potential energy, environmental, or economic impacts that would preclude the use of low sulfur diesel in the emergency engines.

Step 5 – Select BACT

Live Oaks proposes to use low sulfur diesel with maximum sulfur content of 0.05-percent and limited operating hr/yr as BACT for SO_2 and H_2SO_4 emissions from the emergency engines.

4.7.3 CO and VOC

Step 1 – Identification of CO and VOC Control Technologies

CO and VOC emissions are a result of incomplete thermal oxidation of carbon contained within the fuel. Properly designed and operated engines typically emit low levels of CO and VOC. High levels of CO and VOC emissions could result from poor design or sub-optimal firing conditions.

The following control options are evaluated in the BACT analysis.

Combustion Controls

Combustion controls, which includes optimization of the combustion chamber designs and operation practices that improve the oxidation process and minimize incomplete combustion is the primary mechanism available for lowering CO and VOC emissions. Good combustion system design, which includes continuous mixing of air and fuel in the proper proportions, extended residence time, and consistent high temperatures in the combustion chamber is a standard feature of modern engines. As a result, CO and VOC emissions from modern engines are inherently low.

Non-Selective Catalytic Reduction

Similar to automobile catalytic converters, this method employs noble metal catalysts to oxidize nitrogen oxides to molecular nitrogen. It operates in regimes with less than 0.5-percent O_2 in the exhaust, which corresponds to fuel-rich operation. NSCR can simultaneously reduce NO_x, CO, and hydrocarbons. The method is not feasible with lean-burn internal combustion engines.

Step 2 - Technical Feasibility Analysis

Technical feasibility of the potential control options is evaluated below.

- **Combustion Controls.** Combustion controls, which include combustion system design and proper operation and maintenance practices, have been applied successfully to internal combustion engines and are considered technically feasible for the emergency diesel engines.
- **NSCR.** NSCR is considered to be not technically feasible due to the small size of the emergency engines and intermittent operations. The emergency engines will only operate about 2 hours a month for readiness testing and maintenance checks and up to 500 hr/yr to account for emergencies and plant startups.

Step 3 – Rank Control Technologies by Control Effectiveness

The only CO and VOC control technology considered technically feasible for the emergency diesel engines is combustion controls. The energy, environmental, and economic impacts associated with combustion controls are listed in accordance with EPA guidance.

- **Energy Impacts.** Combustion controls are inherent to the combustion process and do not create any energy impacts.
- **Environmental Impacts.** Combustion controls do not create negative environmental impacts since these systems are designed and operated to achieve the optimum balance between CO/VOC and NO_x emissions.
- **Economic Impacts.** Combustion controls are part of the standard design of modern engines and does not create any economic impacts.

Step 4 – Evaluate the Most Effective Controls

There are no energy, environmental, or economic impacts that would preclude the use of combustion controls for the proposed emergency generator and emergency fire water pump.

Step 5 – Select BACT

Live Oaks proposes to use combustion controls as BACT for CO and VOC emissions from the emergency generator and emergency fire water pump. The proposed BACT CO emissions limits for the emergency engines are equivalent to the NSPS Subpart IIII CO emissions standards for the emergency engine and fire water pump.

4.7.4 $PM/PM_{10}/PM_{2.5}$

Step 1 - Identification of Particulate Matter Control Technologies

A small amount of particulate matter results from the combustion of diesel fuel in the emergency engines. EPA identifies two types of smoke that may be emitted from diesel engines during stable operations (i.e., blue smoke and black smoke). Per EPA's AP-42 Section 3.3 (Gasoline and Diesel Industrial Engines), blue smoke is emitted when lubricating oil leaks, often past worn piston rings, into the combustion chamber and is partially burned. The primary constituent of black smoke is agglomerated carbon particles (soot) formed in regions of the combustion mixtures that are O_2 deficient.

The following control options are evaluated in the particulate matter BACT analysis.

Combustion Controls

Carbon soot is formed in regions of combustion mixture that are O2 deficient. Combustion controls, which includes optimization of the combustion chamber designs and operation practices that improve the oxidation process and minimize incomplete combustion is the primary mechanism available for lowering carbon soot formation. Good combustion system design, which includes continuous mixing of air and fuel in the proper proportions, extended residence time, and consistent high temperatures in the combustion chamber is a standard feature of modern engines.

Proper Maintenance

Blue smoke is emitted when lubricating oil leaks, often past worn piston rings, into the combustion chamber and is partially burned. Per EPA's AP-42 Section 3.3 (Gasoline and Diesel Industrial Engines), proper maintenance is the most effective method of preventing blue smoke emissions from all types of IC engines.

Add-On Control Technologies

Modern internal combustion engine designs include good combustion controls and the uncontrolled particulate matter emissions are very low. Based on the review of the RBLC database presented in Table 4-7, no emergency engines have been permitted with add-on controls. Therefore, no add-on controls are considered for the emergency engines proposed for the Project.

Step 2 - Technical Feasibility Analysis

Technical feasibility of the potential control options is evaluated below.

- **Combustion Controls.** Combustion controls, which include combustion system design and proper engine operation and maintenance, have been applied successfully in similar engines proposed for the Project and are considered technically feasible.
- **Proper Maintenance.** Proper maintenance is effective in minimizing particulate emissions and is considered technically feasible.
- **Add-On Controls.** Add-on PM/PM_{10} control devices are not considered for the emergency diesel engines of the Project. Consistent with this position and based on the information in EPA's RBLC database presented in Table 4-7, no emergency diesel engine has been equipped with an add-on control device.

Step 3 – Rank Control Technologies by Control Effectiveness

Combustion controls and proper maintenance are the only feasible technologies to control particulate matter emissions from the emergency engines and together they present the top control technology. Next, the energy, environmental, and economic impacts of the top control option are listed in accordance with EPA guidance.

- **Energy Impacts.** Combustion controls and proper maintenance are not expected to create any energy impacts.
- **Environmental Impacts.** Combustion controls and proper maintenance do not create negative environmental impacts.
- **Economic Impacts.** Combustion controls is part of the standard design of modern engines and does not create any economic impacts. Proper maintenance is not expected to create any adverse economic impacts.

Step 4 – Evaluate the Most Effective Controls

There are no energy, environmental, or economic impacts that would preclude the use of combustion controls and proper maintenance practices for the proposed emergency engines.

Step 5 – Select BACT

Live Oaks proposes to use combustion controls and proper maintenance as BACT for particulate matter emissions from the emergency diesel engines. The proposed BACT particulate matter emissions limits for the emergency engines are equivalent to the NSPS Subpart IIII particulate matter emissions standards for the emergency engine and fire water pump.

4.8 Cooling Tower BACT Analysis

This section contains the BACT analysis for the $PM/PM_{10}/PM_{2.5}$ emissions from the proposed 10-cell mechanical draft cooling tower for the Project. Water circulation rate for the proposed cooling tower is 140,000 gallons per minute. TDS concentration in the water is 1,739 ppm by weight. The cooling tower will be equipped with high-efficiency drift eliminators with a maximum drift rate of 0.001-percent. PM emission from the tower is approximately 1-2 lb/hr. PM_{10} and $PM_{2.5}$ emission is 0.8 lb/hr and 0.003 lb/hr, respectively (see Table 2-4).

Step 1 – Identification of PM/PM_{10} Control Technologies

The following potential control options are evaluated in the BACT analysis for particulate matter emissions from the cooling tower:

Air Cooled Condenser – Dry Cooling

Air cooled condensers (ACC) condense exhaust steam from the steam turbine and return condensate to the boiler. ACCs have a very large, finned-tube water-to-air heat exchanger through which one or more large fans force a stream of ambient air to remove heat from the circulating water in the tube-side of the exchanger. ACCs are elevated structures with a very large footprint and are typically used in arid climates.

High Efficiency Drift Eliminators

Cooling towers use a fan to move air through each coding tower cell. This allows a considerable amount of water vapor and sometimes droplets to be introduced into the surroundings. The use of high-efficiency drift-eliminating media to remove droplets through inertial impaction from the air flow exiting the cooling tower is commercially proven technique to reduce particulate matter emissions. The drift eliminators used in cooling towers rely on inertial separation caused by direction changes while passing through the eliminators. Types of drift eliminator configurations include herringbone (blade-type), wave form, and cellular (or honeycomb) designs. The cellular units generally are the most efficient.

Step 2 - Technical Feasibility Analysis

Technical feasibility of the potential control options is evaluated below.

- **Air Cooled Condenser.** ACCs are a very large elevated structure usually considered for projects in arid climate. The large fans of ACC also generate additional noise, which may be an issue if the project is not located in a remote area. ACCs are also much less efficient in cooling the circulating water. The large fans and less efficient coding considerably reduce the net generation. Areas where ACC has been adopted, this measure is usually to reduce the water consumption of the plant, rather than as BACT for particulate matter emissions. Though ACC is technically feasible, Live Oaks plans to use a wet cooling option and ACC is not considered any further in this analysis.
- **High Efficiency Drift Eliminator.** High efficiency drift eliminators are commercially available and a proven technology and is considered to be technically feasible for particulate matter emissions from the Project's cooling tower.

Step 3 – Rank Control Technologies by Control Effectiveness

Drift eliminators is the only feasible technology to control particulate matter emissions from the wet cooling tower. Based on the review of EPA's RBLC database, which is presented in Table 4-8, the most stringent BACT limit for cooling towers is drift eliminators with drift rate 0.001 to

0.0005-percent. Next, the energy, environmental, and economic impacts of the top control option are listed in accordance with EPA guidance.

- **Energy Impacts.** There is no energy impacts associated with a high-efficiency drift eliminator.
- **Environmental Impacts.** Drift eliminators do not create negative environmental impacts.
- **Economic Impacts.** Drift eliminators with a drift rate of 0.001-percent is most common and demonstrated in practice. Drift eliminators with 0.0005-percent drift rate is commercially available but are more expensive.

Step 4 – Evaluate the Most Effective Controls

There are no energy, environmental, or economic impacts that would preclude the use of drift eliminators for the proposed Project's wet mechanical draft cooling tower.

Step 5 – Select BACT

Live Oaks proposes to use drift eliminators with a drift rate of 0.001-percent as BACT for particulate matter emissions from the wet mechanical draft cooling tower.

TABLE 4-1
SUMMARY OF NO_x BACT DETERMINATIONS FOR NATURAL GAS-FIRED CTS (2003-2008)

Facility Name	State	Permit Issued	Process Info	Heat Input	Control Method	NO_x Limit	Basis
Georgia							
Peace Vally Generation Company, LLC	GA	6/1/2003	(3) Combined Cycle CTs (GE 7FA)/Duct Burners	1,550 Net MW	DLN and SCR	2.5 ppmvd @ 15% O_2	BACT-PSD
Mcintosh Combined Cycle Facility	GA	4/17/2003	(4) Turbine, Combined Cycle, Natural Gas	140 MW	DLN and SCR	2.5 ppmvd @ 15% O_2	BACT-PSD
GenPower Rincon, LLC	GA	3/24/2003	(2) Combined Cycle CT (GE 7FA)/HRSG	172 MW	DLN and SCR	2.5 ppmvd @ 15% O_2	BACT-PSD
Wansley Combined Cycle Energy Facility	GA	1/15/2002	(2) Combined Cycle CT (Siemens V84.3a2)/HRSG	521 Net MW	DLN and SCR	3.0 ppmvd @ 15% O_2	BACT-PSD
Effingham County Power	GA	12/27/2001	(2) Combined Cycle CT (GE 7FA)/HRSG	185 MW	SCR	3.0 ppmvd @ 15% O_2	BACT-PSD
Other States							
Gateway Generating Station	CA	7/1/2008	(2) Combined Cycle CT (GE 7FA)/HRSG	530 Net MW	DLN and SCR	2.0 ppmvd @ 15% O_2	BACT-PSD
Colusa Generating Station	CA	5/1/2008	(2) Combined Cycle CT/HRSG	172 MW	DLN and SCR	2.0 ppmvd @ 15% O_2	
Arsenal Hill Power Plant	LA	3/20/2008	(2) Combined Cycle Gas Turbines	2,110 MMBtu/hr	DLN and SCR	30.15 lb/hr	BACT-PSD
Kleen Energy Systems, LLC	CT	2/25/2008	(2) CT (Siemens SGT6-5000f)	2,136 MMBtu/hr	DLN and SCR	2.0 ppmvd @ 15% O_2	LAER
Kleen Energy Systems, LLC	CT	2/25/2008	(2) CT (Siemens SGT6-5000f) w/ DB	2,581 MMBtu/hr	DLN and SCR	2.0 ppmvd @ 15% O_2	LAER
CPV Warren, LLC	VA	1/14/2008	Electric Generation - Scenario 1	1,717 MMBtu/hr	DLN, GCP and SCR	2.0 ppmvd @ 15% O_2	BACT-PSD
CPV Warren, LLC	VA	1/14/2008	Electric Generation - Scenario 2	1,944 MMBtu/hr	DLN, GCP and SCR	2.0 ppmvd @ 15% O_2	BACT-PSD
CPV Warren, LLC	VA	1/14/2008	Electric Generation - Secnario 3	2,204 MMBtu/hr	DLN, GCP and SCR	2.0 ppmvd @ 15% O_2	BACT-PSD
Russell City Enery Center	CA	6/19/2007	(2) Combined Cycle (Westinghouse 501F)/HRSG	600 Net MW	DLN and SCR	2.0 ppmvd @ 15% O_2	BACT-PSD
Faribault Energy Park	MN	6/5/2007	Combined Cycle CT W/Duct Burner	1,758 MMBtu/hr	DLN and SCR	3.0 ppmvd @ 15% O_2	BACT-PSD
Blythe Energy Project II, LLC	CA	4/25/2007	(2) Combustion Turbines	170 MW	SCR	2.0 ppmvd	BACT-PSD
PSO Southwestern Power Plt	OK	2/9/2007	Gas-Fired Turbines		DLN	9.0 ppm	BACT-PSD
Progress Bartow Power Plant	FL	1/26/2007	Combined Cycle CT (4-On-1)	1,972 MMBtu/hr	WI	15.0 ppmvd uncorrected	BACT-PSD
Progress Bartow Power Plant	FL	1/26/2007	Simple Cycle Combustion Turbine (One Unit)	1,972 MMBtu/hr	WI and DLN	15.0 ppmvd	BACT-PSD
FPL West County Energy Center	FL	1/10/2007	Combined Cycle CTs - 6 Units	2,333 MMBtu/hr	DLN and SCR	2.0 ppmvd @ 15% O_2	BACT-PSD
Lawton Energy Cogen Facility	OK	12/12/2006	Combustion Turbine And Duct Burner		DLN and SCR	3.5 ppmvd	BACT-PSD
Ineos Chocolate Bayou Facility	TX	8/29/2006	Cogeneration Train 2 And 3 (CT and DB)	35 MW	DLN and SCR	11.43 lb/hr	BACT-PSD
Caithnes Bellport Energy Center	NY	5/10/2006	Combustion Turbine	2,221 MMBtu/hr	SCR	2.0 ppmvd @ 15% O_2	BACT-PSD
Rocky Mountain Energy Center, LLC	CO	5/2/2006	Natural-Gas Fired, Combined-Cycle Turbine	300 MW	DLN and SCR	3.0 ppm @ 15% O_2	BACT-PSD
City Public Service Jk Spruce Electrice Generating	TX	12/28/2005	Spruce Power Generator Unit No 2			1,600 lb/hr	BACT-PSD
Forsyth Energy Plant	NC	9/29/2005	(3) Turbine, Combined Cycle, Natural Gas	1,844 MMBtu/hr	DLN and SCR	2.5 ppm @ 15% O_2	BACT-PSD
Tracy Substation Expansion Project	NV	8/16/2005	Combined Cycle CT/HRSG and DB	306 MW	SCR	2.0 ppm @ 15% O_2	BACT-PSD
Tracy Substation Expansion Project	NV	8/16/2005	Combined Cycle CT/HRSG and DB	306 MW	SCR	2.0 ppm @ 15% O_2	BACT-PSD
Wanapa Energy Center	OR	8/8/2005	(4) CT/HRSG and DB	2,384 MMBtu/hr	DLN and SCR	2.0 ppmvd @ 15% O_2	BACT-PSD
Hines Power Block 4	FL	6/8/2005	Combined Cycle Turbine	530 MW	SCR	2.5 ppm	BACT-PSD
Crescent City Power	LA	6/6/2005	(2) Gas Turbines - 187 MW	2,006 MMBtu/hr	DLN and SCR	21.8 lb/hr	BACT-PSD
Duke Energy Washington County, LLC	OH	5/9/2005	(2) Turbines (Model Ge 7fa), DB On	170 MW	DLN and SCR	3.5 ppmvd @ 15% O_2	BACT-PSD
Duke Energy Washington County, LLC	OH	5/9/2005	(2) Turbines (Model Ge 7fa), DB Off	170 MW	DLN and SCR	3.5 ppmvd @ 15% O_2	BACT-PSD
Berrien Energy, LLC	MI	4/13/2005	(3) CT w/ Duct Burners	1,584 MMBtu/hr	DLN and SCR	2.5 ppmvd @ 15% O_2	BACT-PSD
FPL Turkey Point Power Plant	FL	2/8/2005	(4) Combustion Turbines	170 MW	DLN and SCR	2.0 ppmvd @ 15% O_2	BACT-PSD
BP Cherry Point Cogeneration Project	WA	1/11/2005	CT (Model GE 7FA)/HRSG	174 MW	DLN and SCR	2.5 ppmvd	BACT-PSD
Duke Energy Hanging Rock Energy Facility	OH	12/28/2004	(4) Turbines (Model GE7FA), DB On	172 MW	DLN and SCR	3.0 ppmvd @ 15% O_2	BACT-PSD
Duke Energy Hanging Rock Energy Facility	OH	12/28/2004	(4) Turbines (Model GE7FA), DB Off	172 MW	DLN and SCR	3.0 ppmvd @ 15% O_2	BACT-PSD
Pastoria Energy Facility	CA	12/23/2004	(3) Combustion Turbines	168 MW	XONON or DLN with SCR	2.5 ppmvd	BACT-PSD
Sabine Pass Lng Import Terminal	LA	11/24/2004	(4) 30 MW Gas Turbine Generators	290 MMBtu/hr	DLN	29 lb/hr	BACT-PSD
Reliant Energy Choctaw County, LLC	MS	11/23/2004	Combined Cycle GE CT (Aa-001)	230 MW	SCR	3.5 ppmvd @ 15% O_2	BACT-PSD
Reliant Energy Choctaw County, LLC	MS	11/23/2004	Combined Cycle GE CT (Aa-002)	230 MW	SCR	3.5 ppmvd @ 15% O_2	
Reliant Energy Choctaw County, LLC	MS	11/23/2004	Combined Cycle GE CT (Aa-003)	230 MW	SCR	3.5 ppmvd @ 15% O_2	BACT-PSD
El Dorado Energy, LLC	NV	8/19/2004	(2) Combined Cycle CT & Cogen	475 MW	DLN and SCR	3.5 ppm @ 15% O_2	BACT-PSD
Sutter Power Plant	CA	8/16/2004	(2) Combustion Turbines	170 MW	DLN and SCR	2.5 ppmvd	BACT-PSD
Currant Creek	UT	5/17/2004	(2) Natural Gas Fired Turbines And HRSGs		SCR	2.25 ppmvd	BACT-PSD
Copper Mountain Power	NV	5/14/2004	Large CTs, Combined Cycle & Cogeneration	600 MW	DLN and SCR	2.0 ppmvd	BACT-PSD
Duke Energy Wythe, LLC	VA	2/5/2004	Combined Cycle CT	170 MW	SCR and DLN, GCP	2.5 ppmvd	BACT-PSD
Duke Energy Wythe, LLC	VA	2/5/2004	Combined Cycle CT, DB	170 MW	SCR and DLN, GCP	2.5 ppmvd	BACT-PSD
COB Energy Facility, LLC	OR	12/30/2003	(4) Combined Cycle CT, DB	1,150 MW	DLN and SCR	2.5 ppmvd @ 15% O_2	BACT-PSD
Ivanpah Energy Center, L.P.	NV	12/29/2003	Large CTs, Combined Cycle & Cogeneration	500 MW	DLN and SCR	2.0 ppmvd	BACT-PSD

TABLE 4-1
SUMMARY OF NO_x BACT DETERMINATIONS FOR NATURAL GAS-FIRED CTS (2003-2008)

Facility Name	State	Permit Issued	Process Info	Heat Input	Control Method	NO_x Limit	Basis
Mankato Energy Center	MN	12/4/2003	Large CT, 2 Each	1,916 MMBtu/hr	Lean Pre-Mix Combustion & SCR	3.0 ppmvd @ 15% O_2	BACT-PSD
Mankato Energy Center	MN	12/4/2003	Large CT, 2 Each	1,827 MMBtu/hr	WI and SCR	5.5 ppmvd @ 15% O_2	BACT-PSD
James City Energy Park	VA	12/1/2003	Combined Cycle CT	1,973 MMBtu/hr	DLN and SCR	2.5 ppm	BACT-PSD
James City Energy Park	VA	12/1/2003	Combined Cycle CT, DB	1,973 MMBtu/hr	DLN and SCR	2.5 ppm	BACT-PSD
Duke Energy Arlington Valley (AVEFII)	AZ	11/12/2003	Combined Cycle CT, DB	325 MW	SCR	2.0 ppm @ 15% O_2	BACT-PSD
Duke Energy Arlington Valley (AVEFII)	AZ	11/12/2003	Combined Cycle CT	325 MW	SCR	2.0 ppm @ 15% O_2	BACT-PSD
Hines Energy Complex, Power Block 3	FL	9/8/2003	(2) Combined Cycle CTs	1,830 MMBtu/hr	DLN and SCR	2.5 ppmvd @ 15% O_2	BACT-PSD
Sacramento Municipal Utility District	CA	9/1/2003	(2) Gas Turbines	1,865 MMBtu/hr	SCR	2.0 ppmvd @ 15% O_2	LAER
Redbud Power Plant	OK	6/3/2003	Combustion Turbine And Duct Burners	1,832 MMBtu/hr	DLN and SCR	3.5 ppmvd @ 15% O_2	BACT-PSD
Beatrice Power Station	NE	5/29/2003	(2) Combined Cycle CT	80 MW	DLN and SCR	3.5 ppm @ 15% O_2	BACT-PSD
Vernon City Light & Power	CA	5/27/2003	Gas Turbine: Combined Cycle < 50 Mw	43 MW	SCR and Oxidation Catalyst	2.0 ppmvd @ 15% O_2	BACT-PSD
Magnolia Power Project, Scppa	CA	5/27/2003	Gas Turbine: Combined Cycle >= 50 Mw	181 Net MW	SCR and Oxidation Catalyst	2.0 ppmvd @ 15% O_2	BACT-PSD
Mirant Sugar Creek, LLC	IN	4/23/2003	(4) Combined Cycle, Startup & Shut Down	1,491 MMBtu/hr	DLN Burners, GCP	64.9 TPY	BACT-PSD
Midland Cogeneration (Mcv)	MI	4/21/2003	(11) Turbine, Combined Cycle	984 MMBtu/hr	Existing Steam Injection	159 lb/hr	BACT-PSD
Midland Cogeneration (Mcv)	MI	4/21/2003	(1) Turbine, Combined Cycle	984 MMBtu/hr	Low Nox Burners	98 lb/hr	BACT-PSD
Sumas Energy 2 Generation Facility	WA	4/17/2003	(2) Turbines, Combined Cycle	660 MW	DLN, SCR	2.0 ppmvd	BACT-PSD
FPL Martin Plant	FL	4/16/2003	(4) Turbine, Combined Cyle, Natural Gas	170 MW	DLN, SCR	2.5 ppmvd @ 15% O_2	BACT-PSD
FPL Martin Plant	FL	4/16/2003	(4) Turbine, Simple Cycle, Natural Gas	170 MW	DLN, SCR	9.0 ppmvd @ 15% O_2	BACT-PSD
FPL Martin Plant	FL	4/16/2003	Combined Cycle CT With Duct Burner	170 MW	DLN, SCR	2.5 ppm @ 15% O_2	BACT-PSD
FPL Manatee Plant - Unit 3	FL	4/15/2003	(4) Turbine, Combined Cycle, Natural Gas	170 MW	DLN, SCR	2.5 ppmvd @ 15% O_2	BACT-PSD
FPL Manatee Plant - Unit 3	FL	4/15/2003	(4) Turbine, Simple Cycle, Natural Gas	170 MW	DLN, SCR	9.0 ppmvd @ 15% O_2	BACT-PSD
Black Hills Corp./Neil Simpson Two	WY	4/4/2003	Turbine, Combined Cycle, & Duct Burner	40 MW	DLN, SCR	2.5 ppm @ 15% O_2	Other Case-by-Case
Chocolate Bayou Plant	TX	3/24/2003	(2) Cogeneration Trains 2 & 3, Gt-2 & 3	70 MW, TOTAL	DLN, SCR	11.43 lb/hr	Other Case-by-Case
Duke Energy Stephens, Llc Stephens Energy	OK	3/21/2003	(2) Turbines, Combined Cycle	1,701 MMBtu/hr	DLN, SCR	3.5 ppm @ 15% O_2	BACT-PSD
Salt River Project/Santan Gen. Plant	AZ	3/7/2003	Combined Cycle CT with Duct Burner	175 MW	SCR	2.0 ppm @ 15% O_2	LAER
Kalkaska Generating, Inc	MI	2/4/2003	(2) Turbine, Combined Cycle	605 MW	DLN and SCR	3.0 ppmvd @ 15% O_2	BACT-PSD
South Shore Power, LLC	MI	1/30/2003	(2) Turbine, Combined Cycle	172 MW	DLN & SCR	3.0 ppmvd @ 15% O_2	BACT-PSD
Mirant Wyandotte, LLC	MI	1/28/2003	(2) Turbine, Combined Cycle	2,200 MMBtu/hr	DLN and SCR	3.5 ppm	BACT-PSD
Texas City Operations	TX	1/23/2003	(4) CTs - 501-2&601-2, E09a023-26	14 MW	Low Nox Combustors	24 lb/hr	Other Case-by-Case
Texas City Operations	TX	1/23/2003	(2) Gas Turbines & Whb - Combined - 501-2	14 MW	Low Nox Combustors	33 lb/hr	Other Case-by-Case
Texas City Operations	TX	1/23/2003	(2) Gas Turbines & Whb - Combined - 601-2	14 MW	Low Nox Combustors	33 lb/hr	Other Case-by-Case
Texas City Operations	TX	1/23/2003	CTs 501-2&601-2 Combined Startup Limits	14 MW	Low Nox Combustors	48 lb/hr	Other Case-by-Case
Bluewater Energy Center, LLC	MI	1/7/2003	(3) Turbine, Combined Cycle	180 MW	DLN and SCR	4.5 ppmvd	BACT-PSD

Source: EPA 2008 (RBLC database); Golder, 2008

Note: DLN= dry low NOx; SCR= selective catalytic reduction; WI= water injection; GCP= good combustion practices

TABLE 4-2
SUMMARY OF CO BACT DETERMINATIONS FOR NATURAL GAS-FIRED CTS (2003-2008)

Facility Name	State	Permit Issued	Process Info	Heat Input	Control Method	CO Limit	Basis
Georgia							
McDonough Combined Cycle Plant	GA	1/7/2008	(6) Combinded Cycle CT (Mitsubishi M501G) w/ DB	254 MW	Oxidation Catalyst	1.8 ppm @ 15% O_2	BACT-PSD
Peace Vally Generation Company, LLC	GA	6/1/2003	(3) Combined Cycle CTs (GE 7FA)/Duct Burners	1550 Net MW	Oxidation Catalyst	2.0 ppmvd @ 15% O_2	BACT-PSD
Mcintosh Combined Cycle Facility	GA	4/17/2003	(4) Turbine, Combined Cycle, Natural Gas	140 MW	Catalytic Oxidation	2.0 ppmvd @ 15% O_2	BACT-PSD
GenPower Rincon, LLC	GA	03/24/2003	(2) Combined Cycle CT (GE 7FA)/HRSG	171.7 MW	Catalytic Oxidation	2.0 ppmvd @ 15% O_2	BACT-PSD
Wansley Combined Cycle Energy Facility	GA	1/15/2002	(2) Combined Cycle CT (Siemens V84.3a2)/HRSG	521 NET MW	GCP	2.0 ppmvd @15% O_2	BACT-PSD
Effingham County Power	GA	12/27/2001	(2) Combined Cycle CT (GE 7FA)/HRSG	185 MW	GCP	9.0 ppmvd @15% O_2	BACT-PSD
Other States							
Gateway Generating Station	CA	7/1/2008	(2) Combined Cycle CT (GE 7FA)/HRSG	530 Net MW	Oxidaion Catalyst	4.0 ppmvd @ 15% O_2	BACT-PSD
Colusa Generating Station	CA	5/1/2008	(2) Combined Cycle CT/HRSG	172 MW	Oxidation Catalyst	3.0 ppmvd @ 15% O_2	BACT-PSD
Arsenal Hill Power Plant	LA	03/20/2008	Two Combined Cycle Gas Turbines	2,110 MMBtu/hr	Proper Operating Practices	143.31 lb/hr	BACT-PSD
Kleen Energy Systems, LLC	CT	02/25/2008	(2) CT (Siemens SGT6-5000f) w/ DB	2,136 MMBtu/hr	Oxidation Catalyst	0.9 ppmvd @ 15% O_2	BACT-PSD
Kleen Energy Systems, LLC	CT	02/25/2008	(2) CT (Siemens SGT6-5000f), DB	2,581 MMBtu/hr	Oxidation Catalyst	1.7 ppmvd @ 15% O_2	BACT-PSD
CPV Warren, LLC.	VA	01/14/2008	Electric Generation - Scenario 1	1,717 MMBtu/hr	NG Only, GCP, Oxidation Catalyst	12.8 lb/hr	BACT-PSD
CPV Warren, LLC.	VA	01/14/2008	Electric Generation - Scenario 2	1,944 MMBtu/hr	GCP and Oxidation Catalyst.	1.2 ppmvd	BACT-PSD
CPV Warren, LLC.	VA	01/14/2008	Electric Generation - Secnario 3	2,204 MMBtu/hr	GCP and Oxidation Catalyst.	1.8 ppmvd	BACT-PSD
Russell City Enery Center	CA	6/19/2007	(2) Combined Cycle (Westinghouse 501F)/HRSG	600 Net MW	Oxidation Catalyst	4.0 ppmvd @ 15% O_2	BACT-PSD
Fairbault Energy Park	MN	06/05/2007	Combined Cycle CT W/Duct Burner	1,758 MMBtu/hr	GCP	9.0 ppmvd	BACT-PSD
Blythe Energy Project II, LLC	CA	04/25/2007	(2) Combustion Turbines	170 MW		4.0 ppmvd	BACT-PSD
Pso Southwestern Power Plt	OK	02/09/2007	Gas-Fired Turbines		Combustion Control	25.0 ppmvd	BACT-PSD
Progress Bartow Power Plant	FL	01/26/2007	Combined Cycle CT (4-On-1)	1,972 MMBtu/hr	GCP	8.0 ppmvd	BACT-PSD
Progress Bartow Power Plant	FL	01/26/2007	Simple Cycle Combustion Turbine (One Unit)	1,972 MMBtu/hr	GCP	8.0 ppmvd	BACT-PSD
FPL West County Energy Center	FL	01/10/2007	Combined Cycle CT - 6 Units	2,333 MMBtu/hr	GCP	8.0 ppmvd @ 15% O_2	BACT-PSD
Lawton Energy Cogen Facility	OK	12/12/2006	Combustion Turbine And Duct Burner		GCP	16.38 ppmvd	BACT-PSD
Ineos Chocolate Bayou Facility	TX	08/29/2006	Cogeneration Train 2 And 3 (CT+DB)	35 MW	GCP	66.81 lb/hr	BACT-PSD
Caithnes Bellport Energy Center	NY	05/10/2006	Combustion Turbine	2,221 MMBtu/hr	Oxidation Catalyst	2.0 ppmvd @ 15% O_2	BACT-PSD
Rocky Mountain Energy Center, LLC	CO	05/02/2006	Natural-Gas Fired, Combined-Cycle Turbine	300 MW	GCP and Oxidation Catalyst.	3.0 ppm @ 15% O_2	BACT-PSD
JK Spruce Electrice Generating Unit 2	TX	12/28/2005	Spruce Power Generator Unit No 2			4480 lb/hr	BACT-PSD
Forsyth Energy Plant	NC	09/29/2005	(3) Turbine, Combined Cycle, Natural Gas	1,844 MMBtu/hr	GCP And Efficient Process Design.	11.6 ppm @ 15% O_2	BACT-PSD
Forsyth Energy Plant	NC	09/29/2005	(3) CT+DB, Combined Cycle	1,844 MMBtu/hr	GCP And Efficient Process Design	25.9 ppm @ 15% O_2	BACT-PSD
Tracy Substation Expansion Project	NV	08/16/2005	Combined Cycle CT/HRSG and DB	306 MW	Oxidation Catalyst	3.5 ppm @ 15% O_2	BACT-PSD
Tracy Substation Expansion Project	NV	08/16/2005	Combined Cycle CT/HRSG and DB	306 MW	Oxidation Catalyst System	3.5 ppm @ 15% O_2	BACT-PSD
Wanapa Energy Center	OR	08/08/2005	CT/HRSG	2,384 MMBtu/hr	Oxidation Catalyst.	2.0 ppmvd @ 15% O_2	BACT-PSD
Hines Power Block 4	FL	06/08/2005	Combined Cycle Turbine	530 MW	Good Combustion	8.0 ppm	BACT-PSD
Crescent City Power	LA	06/06/2005	(2) Gas Turbines - 187 MW	2,006 MMBtu/hr	GCP and Oxidation Catalyst.	17.7 lb/hr	BACT-PSD
Duke Energy Washington County, LLC	OH	05/09/2005	(2) Turbines (Model Ge 7fa), DB On	170 MW		14 ppmvd @ 15% O2	BACT-PSD
Duke Energy Washington County, LLC	OH	05/09/2005	(2) Turbines (Model Ge 7fa), DB Off	170 MW		10 ppmvd @ 15% O2	BACT-PSD
Berrien Energy, LLC	MI	04/13/2005	(3) Combustion Turbines And Duct Burners	1,584 MMBtu/hr	Catalytic Oxidation.	2.0 ppmvd @ 15% O_2	BACT-PSD
FPL Turkey Point Power Plant	FL	02/08/2005	170 Mw Combustion Turbine, 4 Units	170 MW	Efficient Combustion of NG	8.0 ppmvd @ 15% O_2	BACT-PSD
BP Cherry Point Cogeneration Project	WA	01/11/2005	GE7FA CT&HRSG	174 MW	Lean Pre-Mix Ct Burner & Ox Catalyst	2.0 ppmvd	BACT-PSD
Duke Energy Hanging Rock Energy Facility	OH	12/28/2004	(4) Turbines (Model GE7FA), DB On	172 MW		9.0 ppmvd @ 15% O_2	BACT-PSD
Duke Energy Hanging Rock Energy Facility	OH	12/28/2004	(4) Turbines (Model GE7FA), DB Off	172 MW		6.0 ppmvd @ 15% O_2	BACT-PSD
Pastoria Energy Facility	CA	12/23/2004	(3) Combustion Turbines	168 MW	DLN	6.0 ppmvd	BACT-PSD
Sabine Pass Lng Import Terminal	LA	11/24/2004	(4) 30 MW Gas Turbine Generators	290 MMBtu/hr ea.	GCP	17.8 lb/hr	BACT-PSD
Reliant Energy Choctaw County, LLC	MS	11/23/2004	Combined Cycle GE CT (Aa-001)	230 MW		18.36 ppmv @ 15% O_2	BACT-PSD
Reliant Energy Choctaw County, LLC	MS	11/23/2004	Combined Cycle GE CT (Aa-002)	230 MW		18.36 ppmv @ 15% O_2	BACT-PSD
Reliant Energy Choctaw County, LLC	MS	11/23/2004	Combined Cycle GE CT (Aa-003)	230 MW		18.36 ppmv @ 15% O_2	BACT-PSD
El Dorado Energy, LLC	NV	08/19/2004	(2) Combined Cycle CT & Cogen	475 MW	Oxidation Catalyst	2.6 ppm @ 15% O2	LAER
Sutter Power Plant	CA	08/16/2004	(2) Combustion Turbines	170 MW	Oxidation Catalyst Sysem	4.0 ppmvd	BACT-PSD
Currant Creek	UT	05/17/2004	(2) Natural Gas Fired Turbines And HRSGs		Oxidatino Catalyst	3.0 ppmvd	BACT-PSD
Copper Mountain Power	NV	05/14/2004	Large CTs, Combined Cycle & Cogeneration	600 MW	GCP and Oxidation Catalyst.	3.0 ppmvd	LAER
Duke Energy Wythe, LLC	VA	02/05/2004	Combined Cycle CT	170 MW	GCP	9.0 ppmvd	BACT-PSD
Duke Energy Wythe, LLC	VA	02/05/2004	Combined Cycle CT, DB	170 MW	GCP	14.6 ppmvd	BACT-PSD
COB Energy Facility, LLC	OR	12/30/2003	(4) Combined Cycle CT, DB	1,150 MW	Catalytic Oxidation	2.0 ppmvd @ 15% O_2	BACT-PSD
Ivanpah Energy Center, L.P.	NV	12/29/2003	Large CTs, Combined Cycle & Cogeneration	500 MW	GCP and Oxidation Catalyst.	4.0 ppmvd	LAER

TABLE 4-2
SUMMARY OF CO BACT DETERMINATIONS FOR NATURAL GAS-FIRED CTS (2003-2008)

Facility Name	State	Permit Issued	Process Info	Heat Input	Control Method	CO Limit	Basis
Mankato Energy Center	MN	12/04/2003	Combustion Turbine, Large, 2 Each	1,916 MMBtu/hr	GCP and Oxidation Catalyst.	4.0 ppmvd @ 15% O_2	BACT-PSD
Mankato Energy Center	MN	12/04/2003	Combustion Turbine, Large 2 Each	1,827 MMBtu/hr	GCP and Oxidation Catalyst.	4.8 ppmvd @ 15% O_2	BACT-PSD
James City Energy Park	VA	12/01/2003	Turbine, Combined Cycle, Natural Gas	1,973 MMBtu/hr	GCP	9.0 ppm	BACT-PSD
James City Energy Park	VA	12/01/2003	Turbine, Combined Cycle, Natural Gas,Duct Burner	1,973 MMBtu/hr	GCP	12.0 ppm	BACT-PSD
Duke Energy Arlington Valley (Avefii)	AZ	11/12/2003	Turbine, Combined Cycle & Duct Burner	325 MW	Catalytic Oxidizer	3.0 ppm @ 15% O_2	BACT-PSD
Duke Energy Arlington Valley (Avefii)	AZ	11/12/2003	Turbine, Combined Cycle	325 MW	Catalytic Oxidizer	2.0 ppm @ 15% O_2	BACT-PSD
Hines Energy Complex, Power Block 3	FL	09/08/2003	(2) Combined Cycle CTs	1,830 MMBtu/hr	GCP and Oxidation Catalyst.	10.0 ppmvd @ 15% O_2	BACT-PSD
Sacramento Municipal Utility District	CA	09/01/2003	(2) Gas Turbines	1,611 MMBtu/hr	GCP	4.0 ppm @ 15% O_2	LAER
Redbud Power Plant	OK	06/03/2003	Combustion Turbine And Duct Burners	1,832 MMBtu/hr	GCP	17.2 ppmvd	BACT-PSD
Beatrice Power Station	NE	05/29/2003	(2) Combined Cycle CT	80 MW	GCP and Oxidation Catalyst.	18.4 lb/hr	Other Case-by-Case
Vernon City Light & Power	CA	05/27/2003	Gas Turbine: Combined Cycle < 50 Mw	43 MW	Oxidation Catalyst	2.0 ppmvd @ 15% O_2	BACT-PSD
Magnolia Power Project, Scppa	CA	05/27/2003	Gas Turbine: Combined Cycle >= 50 Mw	181 NET MW	Oxidation Catalyst	2.0 ppmvd @ 15% O_2	BACT-PSD
Mirant Sugar Creek, LLC	IN	04/23/2003	(4) Combined Cycle, Startup & Shut Down	1,491 MMBtu/hr	GCP, NG As Fuel.	82.5 tpy	BACT-PSD
Midland Cogeneration (Mcv)	MI	04/21/2003	(11) Turbine, Combined Cycle	984 MMBtu/hr	Good Combustion Techniques.	26 lb/hr	BACT-PSD
Midland Cogeneration (Mcv)	MI	04/21/2003	(1) Turbine, Combined Cycle	984 MMBtu/hr	GCP	26 lb/hr	BACT-PSD
Sumas Energy 2 Generation Facility	WA	04/17/2003	(2) Turbines, Combined Cycle	660 MW	Oxidation Catalyst	2.0 ppmvd	BACT-PSD
FPL Martin Plant	FL	04/16/2003	(4) Turbine, Combined Cyle, Natural Gas	170 MW	GCP	10.0 ppmvd @ 15% O_2	BACT-PSD
FPL Martin Plant	FL	04/16/2003	(4) Turbine, Simple Cycle, Natural Gas	170 MW	GCP	8.0 ppmvd @ 15% O_2	BACT-PSD
FPL Manatee Plant - Unit 3	FL	04/15/2003	(4) Turbine, Combined Cycle, Natural Gas	170 MW	GCP	10.0 ppmvd @ 15% O_2	BACT-PSD
FPL Manatee Plant - Unit 3	FL	04/15/2003	(4) Turbine, Simple Cycle, Natural Gas	170 MW	GCP	7.4 ppmvd @ 15% O_2	BACT-PSD
Black Hills Corp./Neil Simpson Two	WY	04/04/2003	Turbine, Combined Cycle, & Duct Burner	40 MW	GCP	37.2 ppmv @ 15% O_2	BACT-PSD
Chocolate Bayou Plant	TX	03/24/2003	(2) Cogeneration Trains 2 & 3, Gt-2 & 3	70 MW, TOTAL	GCP	66.81 lb/hr	BACT-PSD
Duke Energy Stephens, Llc Stephens Energy	OK	03/21/2003	(2) Turbines, Combined Cycle	1,701 MMBtu/hr	Combustion Control	10.0 ppm @ 15% O_2	BACT-PSD
Salt River Project/Santan Gen. Plant	AZ	03/07/2003	Combined Cycle CT&DB	175 MW	Catalytic Oxidizer	3.0 ppm @ 15% O_2	LAER
Kalkaska Generating, Inc	MI	02/04/2003	(2)Turbine, Combined Cycle,	605 MW	Oxidation Catalyst.	5.0 ppmvd @ 15% O_2	BACT-PSD
South Shore Power, LLC	MI	01/30/2003	(2) Turbine, Combined Cycle	172 MW	Catalytic Oxidation And Use Of GCP	4.0 ppmvd @ 15% O_2	BACT-PSD
Mirant Wyandotte, LLC	MI	01/28/2003	(2) Turbine, Combined Cycle	2,200 MMBtu/hr	Catalytic Oxidation System.	3.8 ppm	BACT-PSD
Texas City Operations	TX	01/23/2003	(4) CTs - Only - 501-2&601-2, E09a023-26	14 MW	GCP	78 lb/hr	BACT-PSD
Texas City Operations	TX	01/23/2003	(2) Gas Turbines & Whb - Combined - 501-2	14 MW	GCP	107 lb/hr	BACT-PSD
Texas City Operations	TX	01/23/2003	(2) Gas Turbines & Whb - Combined - 601-2	14 MW	GCP	107 lb/hr	BACT-PSD
Bluewater Energy Center, LLC	MI	01/07/2003	(3) Turbine, Combined Cycle	180 MW	Catalytic Afterburner	41.7 lb/hr	BACT-PSD

Source: EPA 2008 (RBLC database); Golder, 2008

Note: DLN= dry low NOx; GCP= good combustion practices

TABLE 4-3
SUMMARY OF PM BACT DETERMINATIONS FOR NATURAL GAS-FIRED CTS (2003-2008)

Facility Name	State	Permit Issued	Process Info	Heat Input	Control Method	$PM/PM_{10}/PM_{2.5}$ Limit	Equivalent $PM/PM_{10}/PM_{2.5}$ Emissions Rate	Basis
Georgia								
Peace Vally Generation Company, LLC	GA	6/1/2003	(3) Combined Cycle CTs (GE 7FA)/Duct Burners	1,550 Net MW	NG Fuel	0.011 lb/MMBtu	0.011 lb/MMBtu	BACT-PSD
Mcintosh Combined Cycle Facility	GA	4/17/2003	(4) Combined Cycle CT (GE 7FA), Natural Gas	140 MW	Clean Fuel, GCP	0.009 lb/MMBtu	0.009 lb/MMBtu	BACT-PSD
GenPower Rincon, LLC	GA	03/24/2003	(2) Combined Cycle CT (GE 7FA)/HRSG	172 MW	Firing NG	0.011 lb/MMBtu	0.011 lb/MMBtu	BACT-PSD
Wansley Combined Cycle Energy Facility	GA	1/15/2002	(2) Combined Cycle CT (Siemens V84.3a2)/HRSG	521 NET MW	GCP, Low Sulfur Fuel	0.011 lb/MMBtu	0.011 lb/MMBtu	BACT-PSD
Effingham County Power	GA	12/27/2001	(2) Combined Cycle CT (GE 7FA)/HRSG	185 MW	Clean Fuel, GCP	21.6 lb/hr		BACT-PSD
Other States								
Gateway Generating Station	CA	7/1/2008	(2) Combined Cycle CT (GE 7FA)/HRSG	530 Net MW	NG with 0.75 gr/100 scf S			BACT-PSD
Colusa Generating Station	CA	5/1/2008	(2) Combined Cycle CT/HRSG	172 MW		20 lb/hr		BACT-PSD
Arsenal Hill Power Plant	LA	3/20/2008	Two CC Gas Turbines	2,110 MMBtu/hr	GCP, NG as Fuel	24.23 lb/hr	0.0115 lb/MMBtu	BACT-PSD
Kleen Energy Systems, LLC	CT	2/25/2008	(2) CT (Siemens SGT6-5000f)	2,136 MMBtu/hr	NG Fuel	11 lb/hr	0.0051 lb/MMBtu	BACT-PSD
Kleen Energy Systems, LLC	CT	2/25/2008	(2) CT (Siemens SGT6-5000f) w/ DB	2,581 MMBtu/hr	NG Fuel	15.2 lb/hr	0.0059 lb/MMBtu	BACT-PSD
CPV Warren	VA	1/14/2008	Electric Generation - Scenario 1	1,717 MMBtu/hr	GCP	0.013 lb/MMBtu	0.0130 lb/MMBtu	N/A
CPV Warren	VA	1/14/2008	Electric Generation - Scenario 2	1,944 MMBtu/hr	GCP	12.5 lb/hr	0.0064 lb/MMBtu	N/A
CPV Warren	VA	1/14/2008	Electric Generation - Secnario 3	2,204 MMBtu/hr	GCP	9.9 lb/hr	0.0045 lb/MMBtu	N/A
Russell City Enery Center	CA	6/19/2007	(2) Combined Cycle (Westinghouse 501F)/HRSG	600 Net MW	NG with 0.25 gr/100 scf S			BACT-PSD
Fairbault Energy Park	MN	6/5/2007	CC CT w/DB	1,758 MMBtu/hr		0.01 lb/MMBtu	0.0100 lb/MMBtu	BACT-PSD
Blythe Energy Project II, LLC	CA	4/25/2007	2 CTs	1,776 MMBtu/hr ea.	NG with 0.5 gr S/100 SCF	6 lb/hr	0.0034 lb/MMBtu	BACT-PSD
PSO Southwestern Power Plant	OK	2/9/2007	Gas-Fired Turbines		NG and Efficient Combustion	0.0093 lb/MMBtu	0.0093 lb/MMBtu	BACT-PSD
FPL West County Energy Center	FL	1/10/2007	CC CTs - 6 Units	2,333 MMBtu/hr	NG only, GCP	2 gr S/100 scf	0.0015 lb/MMBtu	BACT-PSD
Lawton Energy Cogen Facility	OK	12/12/2006	CT And DB		GCP	0.0067 lb/MMBtu	0.0067 lb/MMBtu	BACT-PSD
Ineos Chocolate Bayou Facility	TX	8/29/2006	Cogeneration Train 2 And 3 (Turbine And DB)	35 MW	GCP, use of NG	10.03 lb/hr		BACT-PSD
Caithnes Bellport Energy Center	NY	5/10/2006	CT/HRSG	2,221 MMBtu/hr	LSF	0.0055 lb/MMBtu	0.0055 lb/MMBtu	BACT-PSD
Caithnes Bellport Energy Center	NY	5/10/2006	CT/HRSG and DB	2,715 MMBtu/hr	LSF	0.0066 lb/MMBtu	0.0066 lb/MMBtu	BACT-PSD
Rocky Mountain Energy Center, LLC	CO	5/2/2006	NG Fired, CC Turbine	300 MW	NG only and GCP	0.0074 lb/MMBtu	0.0074 lb/MMBtu	BACT-PSD
Forsyth Energy Plant	NC	9/29/2005	(3) Turbine, CC, NG	1,844 MMBtu/hr	LSF and GCP	0.019 lb/MMBtu	0.0190 lb/MMBtu	BACT-PSD
Forsyth Energy Plant	NC	9/29/2005	(3) Turbine & DB, CC, NG	1,844 MMBtu/hr	LSF and GCP	0.021 lb/MMBtu	0.0210 lb/MMBtu	BACT-PSD
Tracy Substation Expansion Project	NV	8/16/2005	CC CT/HRSG and DB	306 MW	Best Combustion Practices.	0.011 lb/MMBtu	0.0110 lb/MMBtu	BACT-PSD
Tracy Substation Expansion Project	NV	8/16/2005	Combined Cycle CT/HRSG and DB	306 MW	Best Combustion Practices.	0.011 lb/MMBtu	0.0110 lb/MMBtu	BACT-PSD
Wanapa Energy Center	OR	8/8/2005	CT/HRSG	2,384 MMBtu/hr				BACT-PSD
Hines Power Block 4	FL	6/8/2005	CC Turbine	1,915 MMBtu/hr	Clean Fuels	10 % Opacity	0.0053 lb/MMBtu	BACT-PSD
Crescent City Power	LA	6/6/2005	(2) Gas Turbines - 187 Mw	2,006 MMBtu/hr	GCP and Clean Fuel	29.4 lb/hr	0.0147 lb/MMBtu	BACT-PSD
Duke Energy Washington County, LLC	OH	5/9/2005	(2) Turbines (Model Ge 7fa), DBs On	170 MW		28 lb/hr		BACT-PSD
Duke Energy Washington County, LLC	OH	5/9/2005	(2) Turbines (Model Ge 7fa), DBs Off	170 MW		19 lb/hr		BACT-PSD
Berrien Energy, LLC	MI	4/13/2005	(3) CTs And DBs	1,584 MMBtu/hr	GCP, use of NG	19 lb/hr	0.0120 lb/MMBtu	BACT-PSD
FPL Turkey Point Power Plant	FL	2/8/2005	(4) 170 MW CT	1,776 MMBtu/hr	GCP		0.0051 lb/MMBtu	BACT-PSD
Bp Cherry Point Cogeneration Project	WA	1/11/2005	(3) GE7FA CT/HRSG	1,614 MMBtu/hr ea.	Only NG	20.6 lb/hr		BACT-PSD
Duke Energy Hanging Rock Energy Facility	OH	12/28/2004	(4) Turbines (Model GE7FA), DBs On	172 MW		23.3 lb/hr		BACT-PSD
Duke Energy Hanging Rock Energy Facility	OH	12/28/2004	(4) Turbines (Model GE7FA), DBs Off	172 MW		15 lb/hr		BACT-PSD
Sabine Pass Lng Import Terminal	LA	11/24/2004	(4) 30 MW Gas Turbine Generators	290 MMBtu/hr ea.	GCP and use of NG	2.11 lb/hr	0.0073 lb/MMBtu	BACT-PSD
Reliant Energy Choctaw County, LLC	MS	11/23/2004	Combined Cycle GE CT (Aa-003)	230 MW each		20.59 lb/hr		BACT-PSD
El Dorado Energy, LLC	NV	8/19/2004	(2) CC CT & Cogen	475 MW		9 lb/hr		LAER
Sutter Power Plant	CA	8/16/2004	(2) CT	170 MW		11.5 lb/hr		BACT-PSD
Currant Creek	UT	5/17/2004	NG Fired Turbines And HRSGs			0.066 lb/MMBtu	0.0660 lb/MMBtu	BACT-PSD
Copper Mountain Power	NV	5/14/2004	Large CTs, CC & Cogeneration	600 MW	LSF	21.3 lb/hr		LAER
Duke Energy Wythe, LLC	VA	38022	CC CT	170 MW	GCP	17.5 lb/hr		BACT-PSD
Duke Energy Wythe, LLC	VA	38022	CC CT, DB	170 MW	GCP	23.7 lb/hr		BACT-PSD
COB Energy Facility, LLC	OR	12/30/2003	CC CT, DB	1,150 MW	GCP, use of NG	14 lb/hr		BACT-PSD
Ivanpah Energy Center, L.P.	NV	12/29/2003	Large CTs, CC & Cogeneration	500 MW	Good Combustion Control	11.25 lb/hr		LAER
Mankato Energy Center	MN	12/4/2003	Large CT, 2 Each	1,916 MMBtu/hr	GCP and Clean Fuel	0.009 lb/MMBtu	0.0090 lb/MMBtu	BACT-PSD
Mankato Energy Center	MN	12/4/2003	Large CT, 2 Each	1,827 MMBtu/hr	GCP and Clean Fuel	0.057 lb/MMBtu	0.0570 lb/MMBtu	BACT-PSD
James City Energy Park	VA	12/01/2003	Turbine, Combined Cycle, Natural Gas	1,973 MMBtu/hr	GCP and Clean Fuel	18 lb/hr	0.0091 lb/MMBtu	
James City Energy Park	VA	12/01/2003	Turbine, Combined Cycle, Natural Gas,Duct Burner	1,973 MMBtu/hr	GCP and Clean Fuel	24.7 lb/hr	0.0125 lb/MMBtu	
Duke Energy Arlington Valley (Avefii)	AZ	11/12/2003	CC CT, DB	325 MW		25 lb/hr	25 lb/hr	BACT-PSD
Duke Energy Arlington Valley (Avefii)	AZ	11/12/2003	CC CT	325 MW		18 lb/hr	18 lb/hr	BACT-PSD
Hines Energy Complex, Power Block 3	FL	9/8/2003	(2) CC CTs	1,830 MMBtu/hr	GCP and Clean Fuel			BACT-PSD
Sacramento Municipal Utility District	CA	9/1/2003	(2) Gas Turbines	1,611 MMBtu/hr	GCP	9 lb/hr	0.0056 lb/MMBtu	LAER
Redbud Power Plant	OK	6/3/2003	CT And DBs	1,832 MMBtu/hr	Efficient Combustion	0.012 lb/MMBtu	0.0120 lb/MMBtu	BACT-PSD
Beatrice Power Station	NE	5/29/2003	(2) Turbine, CC	80 MW		10.8 lb/hr		Other Case-by-Case

TABLE 4-3
SUMMARY OF PM BACT DETERMINATIONS FOR NATURAL GAS-FIRED CTS (2003-2008)

Facility Name	State	Permit Issued	Process Info	Heat Input	Control Method	$PM/PM_{10}/PM_{2.5}$ Limit	Equivalent $PM/PM_{10}/PM_{2.5}$ Emissions Rate	Basis
Vernon City Light & Power	CA	05/27/2003	Gas Turbine: Combined Cycle < 50 Mw	43 MW		0.01 gr/scf		BACT-PSD
Magnolia Power Project, Scppa	CA	05/27/2003	Gas Turbine: Combined Cycle >= 50 Mw	181 NET MW		0.01 gr/scf		BACT-PSD
Sumas Energy 2 Generation Facility	WA	4/17/2003	(2) Turbines, CC	660 MW	GCP & LSF	194 lb/d (filterable)		BACT-PSD
Sumas Energy 2 Generation Facility	WA	4/17/2003	(2) Turbines, CC	660 MW	GCP & LSF	377 lb/d (condensible)		BACT-PSD
FPL Martin Plant	FL	4/16/2003	(4) Turbine, CC, NG	2,095 MMBtu/hr	Use of NG			BACT-PSD
FPL Manatee Plant - Unit 3	FL	4/15/2003	(4) Turbine, CC, NG	2,095 MMBtu/hr	NG			BACT-PSD
Chocolate Bayou Plant	TX	3/24/2003	(2) Cogeneration Trains 2 & 3, Gt-2 & 3	70 MW, TOTAL	GCP	10.03 lb/hr		BACT-PSD
Duke Energy Stephens, LLC	OK	3/21/2003	(2) Turbines, CC	1,701 MMBtu/hr	GCP and Clean Fuel	0.015 lb/MMBtu	0.0150 lb/MMBtu	Other Case-by-Case
Salt River Project/Santan Gen. Plant	AZ	3/7/2003	Turbine, CC, DB, NG	175 MW		0.01 lb/MMBtu	0.0100 lb/MMBtu	LAER
Kalkaska Generating, Inc	MI	2/4/2003	(2) Turbine, CC	605 MW	GCP and Clean Fuel	38 lb/hr		BACT-PSD
South Shore Power, LLC	MI	1/30/2003	(2) Turbine, CC	172 MW	GCP	24 lb/hr		BACT-PSD
Mirant Wyandotte, LLC	MI	1/28/2003	(2) Turbine, CC	2,200 MMBtu/hr	GCP and Firing NG	5.6 mg/m^3		BACT-PSD
Mirant Wyandotte, LLC	MI	1/28/2003	(2) Turbine, CC	2,200 MMBtu/hr	GCP and Firing NG	16.8 lb/hr	0.0076 lb/MMBtu	BACT-PSD
Texas City Operations	TX	1/23/2003	(4) GTs - Only - 501-2&601-2, E09a023-26	14 MW	Firing NG	2.6 lb/hr		Other Case-by-Case
Texas City Operations	TX	1/23/2003	(2) GTs & Whb - Combined - 501-2	14 MW	Firing NG	3.8 lb/hr		Other Case-by-Case
Texas City Operations	TX	1/23/2003	(2) GTs & Whb - Combined - 601-2	14 MW	Firing NG	3.8 lb/hr		Other Case-by-Case
Bluewater Energy Center, LLC	MI	1/7/2003	(3) Turbine, CC	180 MW	Only NG	19.6 lb/hr		BACT-PSD

Source: EPA 2008 (RBLC database); Golder, 2008
Note: GCP= good combustion practices; LSF= low sulfur fuel; NG = natural gas; CC = combined cycle; CT = combustion turbine; DB = duct burner; HRSG = heat recovery steam generator.

TABLE 4-4
SUMMARY OF SO2 AND SAM BACT DETERMINATIONS FOR NATURAL GAS-FIRED CTS (2003-2008)

Facility Name	State	Permit Issued	Process Info	Heat Input	Control Method	SO_2 Limit	SO_2 Basis
Gateway Generating Station	CA	7/1/2008	(2) Combined Cycle CT (GE 7FA)/HRSG	530 Net MW	NG with 0.75 gr/100 scf S	0.0028 lb/MMBtu	BACT-PSD
Arsenal Hill Power Plant	LA	03/20/2008	Two Combined Cycle Gas Turbines	2,110 MMBtu/hr	LSF	0.0057 lb/MMBtu	BACT-PSD
Arsenal Hill Power Plant	LA	03/20/2008	Two Combined Cycle Gas Turbines	2,110 MMBtu/hr	LSF	0.0009 lb/MMBtu	BACT-PSD
Kleen Energy Systems, LLC	CT	02/25/2008	(2) CT (Siemens SGT6-5000f), DB	2 MMCF/H	GCP, NG with 2 gr/100 scf S	0.0023 lb/MMBtu	BACT-PSD
CPV Warren, LLC	VA	01/14/2008	Electric Generation - Scenario 1	1,717 MMBtu/hr	GCP, NG with 0.1 gr/100 scf S	0.0003 lb/MMBtu	N/A
CPV Warren, LLC	VA	01/14/2008	Electric Generation - Scenario 2	1,944 MMBtu/hr	GCP, NG with 0.1 gr/100 scf S	0.00017 lb/MMBtu	N/A
CPV Warren, LLC	VA	01/14/2008	Electric Generation Secnario 3	2,204 MMBtu/hr	GCP, NG with 0.1 gr/100 scf S	0.00034 lb/MMBtu	N/A
Russell City Enery Center	CA	6/19/2007	(2) Combined Cycle (Westinghouse 501F)/HRSG	600 Net MW	NG with 0.25 gr/100 scf S	0.0028 lb/MMBtu	
Progress Bartow Power Plant	FL	01/26/2007	Combined Cycle CTs (4-On-1) - CT Only	1,972 MMBtu/hr	NG	0.0062 lb/MMBtu	BACT-PSD
Progress Bartow Power Plant	FL	01/26/2007	Combined Cycle CTs (4-On-1) - CT+DB	2,472 MMBtu/hr	NG	0.0058 lb/hr	BACT-PSD
FPL West County Energy Center	FL	01/10/2007	Combined Cycle CTs - 6 Units - CT Only	2,511 MMBtu/hr	LSF	0.0059 lb/MMBtu	BACT-PSD
FPL West County Energy Center	FL	01/10/2007	Combined Cycle CTs - 6 Units - CT+DB	2,986 MMBtu/hr	LSF	0.0055 lb/MMBtu	BACT-PSD
Ineos Chocolate Bayou Facility	TX	08/29/2006	(2) CT (Siemens SGT6-5000f) w/ DB	35 MW	LSF	12.66 lb/hr	BACT-PSD
Caithnes Bellport Energy Center	NY	05/10/2006	Combustion Turbine	2,221 MMBtu/hr	LSF	0.0011 lb/MMBtu	BACT-PSD
Forsyth Energy Plant	NC	09/29/2005	(3) Turbine, Combined Cycle, Natural Gas	1,844 MMBtu/hr	LSF	0.0006 lb/MMBtu	BACT-PSD
Forsyth Energy Plant	NC	09/29/2005	(3) Combined Cycle CT+DB	1,844 MMBtu/hr	LSF	0.0006 lb/MMBtu	BACT-PSD
Tracy Substation Expansion Project	NV	08/16/2005	Combined Cycle CT/HRSG #1 With DB	306 MW	GCP		
Tracy Substation Expansion Project	NV	08/16/2005	Combined Cycle CT/HRSG #2 With DB	306 MW	GCP		
Wanapa Energy Center	OR	08/08/2005	CT/HRSG	2,384 MMBtu/hr	NG	0.0014 lb/MMBtu	BACT-PSD
Hines Power Block 4	FL	06/08/2005	Combined Cycle Turbine	1,915 MMBtu/hr	NG with 0.1 gr/100 scf S	0.0028 lb/MMBtu	BACT-PSD
Crescent City Power	LA	06/06/2005	(2) Gas Turbines - 187 MW	2,006 MMBtu/hr	LSF	10.1 lb/hr	BACT-PSD
Duke Energy Washington County, LLC	OH	05/09/2005	(2) Turbines (Model Ge 7fa), DBs On	170 MW	LSF	14.5 lb/hr	BACT-PSD
Duke Energy Washington County, LLC	OH	05/09/2005	(2) Turbines (Model Ge 7fa), DBs Off	170 MW	LSF	11.2 lb/hr	BACT-PSD
FPL Turkey Point Power Plant	FL	02/08/2005	170 MW CT, 4 Units - CT Only	1,776 MMBtu/hr	LSF	0.0055 lb/MMBtu	BACT-PSD
FPL Turkey Point Power Plant	FL	02/08/2005	170 MW CT, 4 Units - CT+DB	2,326 MMBtu/hr	LSF	0.0055 lb/MMBtu	BACT-PSD
BP Cherry Point Cogeneration Project	WA	01/11/2005	GE7FA CT/HRSG	174 MW	GCP and NG	8.8 lb/hr	BACT-PSD
Duke Energy Hanging Rock Energy Facility	OH	12/28/2004	(4) CT (GE7FA), Duct Burners On	1,800 MMBtu/hr	NG and LSF	14.4 lb/hr	BACT-PSD
Duke Energy Hanging Rock Energy Facility	OH	12/28/2004	(4) CT (GE7FA), Duct Burners Off	1,800 MMBtu/hr	NG and LSF	0.0061 lb/MMBtu	BACT-PSD
Pastoria Energy Facility	CA	12/23/2004	(3) Combustion Turbines	168 MW	LSF	3.5 lb/hr	BACT-PSD
Reliant Energy Choctaw County, LLC	MS	11/23/2004	Combined Cycle GE CT (Aa-001)	230 MW		1.38 lb/hr	BACT-PSD
Reliant Energy Choctaw County, LLC	MS	11/23/2004	Combined Cycle GE CT (Aa-002)	230 MW		1.38 lb/hr	BACT-PSD
Reliant Energy Choctaw County, LLC	MS	11/23/2004	Combined Cycle GE CT (Aa-003)	230 MW		1.38 lb/hr	BACT-PSD
El Dorado Energy, LLC	NV	08/19/2004	(2) Combined Cycle CT & Cogeneration	475 MW		1.03 lb/hr	Other Case-by-Case
Fairbault Energy Park	MN	07/15/2004	(1) Turbine, Combined Cycle, Natural Gas	1,876 MMBtu/hr	LSF 0.8 gr S/100 scf	0.0023 lb/MMBtu	BACT-PSD
Copper Mountain Power	NV	05/14/2004	Combined Cycle CT & Cogeneration	600 MW	LSF	5.1 lb/hr	BACT-PSD
Duke Energy Wythe, LLC	VA	02/05/2004	Turbine, Combined Cycle, Natural Gas	170 MW	GCP and LSF	1.74 lb/hr	BACT-PSD
Duke Energy Wythe, LLC	VA	02/05/2004	Turbine, Combined Cycle, Duct Burner	170 MW	GCP and LSF	2.08 lb/hr	BACT-PSD
COB Energy Facility, LLC	OR	12/30/2003	(4) Turbine, Combined Cycle, Duct Burner	1,150 MW	LSF	0.8 gr/100 scf	N/A
COB Energy Facility, LLC	OR	12/30/2003	(4) Duct Burners, Natural Gas	654 MMBtu/hr	Clean Fuel	0.2 lb/MMBtu	N/A
Ivanpah Energy Center, L.P.	NV	12/29/2003	Combined Cycle CT & Cogeneration	500 MW	LSF	1.55 lb/hr	BACT-PSD
Mankato Energy Center	MN	12/04/2003	(2) CT (GE 7FA)	1,916 MMBtu/hr	LSF	0.8 gr/100 scf	BACT-PSD
Mankato Energy Center	MN	12/04/2003	Combustion Turbine, Large 2 Each	1,827 MMBtu/hr	LSF	0.05 % S by wt. (Oil)	BACT-PSD
Hines Energy Complex, Power Block 3	FL	09/08/2003	(2) Combined Cycle CT	1,830 MMBtu/hr	LSF	0.0028 lb/MMBtu	BACT-PSD
Sacramento Municipal Utility District	CA	09/01/2003	(2) Gas Turbines	1,611 MMBtu/hr	LSF	1 gr/100 scf	LAER
Redbud Power Plant	OK	06/03/2003	Combustion Turbine And Duct Burners	1,832 MMBtu/hr	LSF	0.003 lb/MMBtu	BACT-PSD

TABLE 4-4
SUMMARY OF SO2 AND SAM BACT DETERMINATIONS FOR NATURAL GAS-FIRED CTS (2003-2008)

Facility Name	State	Permit Issued	Process Info	Heat Input	Control Method	SO_2 Limit	SO_2 Basis
Midland Cogeneration (Mcv)	MI	04/21/2003	(11) Turbine, Combined Cycle	984 MMBtu/hr	LSF	0.2 GR/100 SCF	BACT-PSD
Sumas Energy 2 Generation Facility	WA	04/17/2003	(2) Turbines, Combined Cycle	660 MW	LSF	1 ppmvd (1hr avg)	BACT-PSD
Sumas Energy 2 Generation Facility	WA	04/17/2003	(2) Turbines, Combined Cycle	660 MW	LSF	189 lb/day	BACT-PSD
FPL Martin Plant	FL	04/16/2003	(4) Combined Cycle CT, CT Only	1,776 MMBtu/hr	LSF	0.0055 lb/MMBtu	BACT-PSD
FPL Martin Plant	FL	04/16/2003	(4) Combined Cycle CT, CT+DB	2,326 MMBtu/hr	LSF	0.0055 lb/MMBtu	BACT-PSD
FPL Manatee Plant - Unit 3	FL	04/15/2003	(4) Combined Cycle CT, CT Only	1,776 MMBtu/hr	LSF	0.0055 lb/MMBtu	BACT-PSD
FPL Manatee Plant - Unit 3	FL	04/15/2003	(4) Combined Cycle CT, CT+DB	2,326 MMBtu/hr	LSF	0.0055 lb/MMBtu	BACT-PSD
Chocolate Bayou Plant	TX	03/24/2003	(2) Cogeneration Trains 2 & 3, Gt-2 & 3	70 MW Net	GCP and LSF	12.66 lb/hr	Other Case-by-Case
Duke Energy Stephens, Llc Stephens Energy	OK	03/21/2003	(2) Turbines, Combined Cycle	1,701 MMBtu/hr	LSF	0.006 lb/MMBtu	BACT-PSD
Kalkaska Generating, Inc	MI	02/04/2003	(2) Combined Cycle CT	605 MW	LSF	5.2 lb/hr	BACT-PSD
South Shore Power, LLC	MI	01/30/2003	(2) Combined Cycle CT	172 MW	LSF	0.2 GR/100 SCF	BACT-PSD
Mirant Wyandotte, LLC	MI	01/28/2003	(2) Combined Cycle CT	2,200 MMBtu/hr	LSF	53.4 T/YR	BACT-PSD
Texas City Operations	TX	01/23/2003	(4) Gas Turbines - 501-2 & 601-2	14 MW	LSF	3.8 lb/hr	N/A
Texas City Operations	TX	01/23/2003	(2) Gas Turbines & Whb - Combined - 501-2	14 MW	LSF	6 lb/hr	N/A
Texas City Operations	TX	01/23/2003	(2) Gas Turbines & Whb - Combined - 601-2	14 MW	LSF	6 lb/hr	N/A
Bluewater Energy Center, LLC	MI	01/07/2003	(3) Turbine, Combined Cycle	180 MW	LSF	177 T/YR	BACT-PSD

Source: EPA 2008 (RBLC database); Golder, 2008
Note: GCP= good combustion practices; LSF= low sulfur fuel

TABLE 4-5
SUMMARY OF BACT DETERMINATIONS FOR FUEL HEATERS (2003-2008)

Facility Name	State	Permit Issued	Process Info	Fuel	Heat Input	Control Method	Pollutant Limit	Basis
Nitrogen Dioxide (NO_2)								
FPL West County Energy Center	FL	1/10/2007	Two 10 MMBtu/hr Process Heaters	NG	10 MMBtu/hr	GCP	0.095 lb/MMBtu	BACT-PSD
Tracy Substation Expansion Project	NV	8/16/2005	Fuel Preheater #2	NG	4 MMBtu/hr	GCP	0.14 lb/MMBtu	BACT-PSD
Tracy Substation Expansion Project	NV	8/16/2005	Fuel Preheater #1	NG	4 MMBtu/hr	GCP	0.14 lb/MMBtu	BACT-PSD
Crescent City Power	LA	6/6/2005	(3) Fuel Gas Heaters	NG	19 MMBtu/hr	LNB and GCP	0.095 lb/MMBtu	BACT-PSD
McIntosh Combined Cycle Facility	GA	4/17/2003	Fuel Gas Heater	NG	5 MMBtu/hr		99 ppmvd @ 15% O_2	BACT-PSD
Fairbault Energy Park	MN	6/5/2007	Emergency Generator	Diesel	1,750 KW	GCP	0.024 lb/hp-hr	BACT-PSD
Volatile Organic Compounds (VOC)								
Progress Bartow Power Plant	FL	1/26/2007	(5) 3 Mmbtu/Hr Process Heaters	NG	3 MMBtu/hr		2 gr S/100 scf gas	BACT-PSD
FPL West County Energy Center	FL	1/10/2007	(2) CT (Siemens SGT6-5000f) w/ DB	NG	10 MMBtu/hr	GCP	2 gr S/100 scf gas	BACT-PSD
Tracy Substation Expansion Project	NV	8/16/2005	Fuel Preheater #2	NG	4 MMBtu/hr	GCP	0.08 lb/MMBtu	BACT-PSD
Tracy Substation Expansion Project	NV	8/16/2005	Fuel Preheater #1	NG	4 MMBtu/hr	GCP	0.08 lb/MMBtu	BACT-PSD
Crecent City Power	LA	6/6/2005	(3) Fuel Gas Heaters	NG	19 MMBtu/hr	GCP	0.00526 lb/MMBtu	BACT-PSD
Particulate Matter ($PM/PM_{10}/PM_{2.5}$)								
FPL West County Energy Center	FL	1/10/2007	(2) 10 MMBtu/hr Process Heaters	NG	10 MMBtu/hr	GCP	2 gr S/100 scf gas	BACT-PSD
Tracy Substation Expansion Project	NV	8/16/2005	Fuel Preheater #2	NG	4 MMBtu/hr	GCP	0.02 lb/MMBtu	BACT-PSD
Tracy Substation Expansion Project	NV	8/16/2005	Fuel Preheater #1	NG	4 MMBtu/hr	GCP	0.02 lb/MMBtu	BACT-PSD
Crecent City Power	LA	6/6/2005	(3) Fuel Gas Heaters	NG	19 MMBtu/hr	Use of NG and GCP	0.00737 lb/MMBtu	BACT-PSD
Carbon Monoxide (CO)								
Progress Bartow Power Plan	FL	1/26/2007	(5) 3 MMBtu/hr Process Heaters	NG	3 MMBtu/hr		0.08 lb/MMBtu	BACT-PSD
FPL West County Energy Center	FL	1/10/2007	(2) 10 MMBtu/hr Process Heaters	NG	10 MMBtu/hr	GCP	0.08 lb/MMBtu	BACT-PSD
Tracy Substation Expansion Project	NV	8/16/2005	Fuel Preheater #2	NG	4 MMBtu/hr	GCP	0.03 lb/MMBtu	BACT-PSD
Tracy Substation Expansion Project	NV	8/16/2005	Fuel Preheater #1	NG	4 MMBtu/hr	GCP	0.03 lb/MMBtu	BACT-PSD
Crecent City Power	LA	6/6/2005	(3) Fuel Gas Heaters	NG	19 MMBtu/hr	GCP	0.08 lb/MMBtu	BACT-PSD
McIntosh Combined Cycle Facility	GA	4/17/2003	Fuel Gas Heater	NG	5 MMBtu/hr		37 ppm @ 15% O_2	BACT-PSD
Sulfur Dioxide (SO_2)								
FPL West County Energy Center	FL	1/10/2007	(2) 10 MMBtu/hr Process Heaters	NG	10 MMBtu/hr	GCP	2 gr S/100 scf gas	BACT-PSD
Crecent City Power	LA	6/6/2005	(3) Fuel Gas Heaters	NG	19 MMBtu/hr	Use of NG and GCP	0.00042 lb/MMBtu	BACT-PSD

Source: EPA 2008 (RBLC database); Golder, 2008
Note: DLN= dry low NOx; SCR= selective catalytic reduction; WI= water injection; GCP= good combustion practices; LSF= low sulfur fuel; LNB= low NOx burner; FGR= flue gas recirculation

TABLE 4-6
SUMMARY OF NO_x, VOC, AND PM LAER AND BACT DETERMINATIONS FOR EMERGENCY ENGINES (2003-2008)

Facility Name	State	Permit Issued	Process Info	Fuel	Throughput	Control Method	Pollutant Limit	Basis
Nitrogen Dioxide (NO_2)								
Fpl West County Energy Center	FL	1/10/2007	(4) 2250 KW Emergency Generators	Diesel	3200 hp	GCP	0.019 lb/hp-hr	BACT-PSD
Arsenal Hill Power Plant	LA	3/20/2008	DFP Diesel Fire Pump	Diesel	310 hp	LSF, Limited Operation, Maintenance	0.031 lb/hp-hr	BACT-PSD
Fairbault Energy Park	MN	6/5/2007	Emergency Generator	Diesel	1750 KW	GCP	0.024 lb/hp-hr	BACT-PSD
Fairbault Energy Park	MN	6/5/2007	Emergency Fire Pump	Diesel		GCP	4.41 lb/MMBtu	BACT-PSD
Blythe Energy Project II	CA	4/25/2007	Fire Pump	Diesel	303 hp		0.025 lb/hp-hr	BACT-PSD
Progress Bartow Power Plant	FL	1/26/2007	Nominal 300 Hp Emergency Pump	Diesel			0.017 lb/hp-hr	BACT-PSD
FPL West County Energy Center	FL	1/10/2007	(4) 2250 KW Emergency Generators	Diesel			0.015 lb/hp-hr	BACT-PSD
FPL West County Energy Center	FL	1/10/2007	Emergency Fired Pump	Diesel			0.017 lb/hp-hr	BACT-PSD
Forsyth Energy Plant	NC	9/29/2005	IC Engine, Emergency Generator	Diesel	11.4 MMBtu/hr		36.48 lb/hr	BACT-PSD
Forsyth Energy Plant	NC	9/29/2005	(2) CT (Siemens SGT6-5000f) w/ DB	Diesel	11.4 MMBtu/hr		36.48 lb/hr	BACT-PSD
Crescent City Power	LA	6/6/2005	Diesel Fired Water Pump	Diesel		GED, GOP	8.9 lb/hr	BACT-PSD
Duke Energy Washington County LLC	OH	5/9/2005	Emergency Diesel-Fired Generator	Diesel	805 hp	LSF, CC	0.015 lb/hp-hr	BACT-PSD
Duke Energy Washington County LLC	OH	5/9/2005	Emergency Diesel Fire Pump Engine	Diesel	400 hp	LSF, CC	0.032 lb/hp-hr	BACT-PSD
Duke Energy Hanging Rock Energy Facility	OH	12/28/2004	(2) Backup Generators	Diesel	670 hp		0.015 lb/hp-hr	BACT-PSD
Duke Energy Hanging Rock Energy Facility	OH	12/28/2004	Fire Water Pump	Diesel	265 hp		0.031 lb/hp-hr	BACT-PSD
Sabine Pass Lng Import Terminal	LA	11/24/2004	Firewater Pump Diesel Engines 1-3	Diesel	660 hp ea.	GED, GOP	0.018 lb/hp-hr	BACT-PSD
Sabine Pass Lng Import Terminal	LA	11/24/2004	Standby Generator Diesel Engines 1-2	Diesel	2220 hp ea.	GED, GOP	0.015 lb/hp-hr	BACT-PSD
Sabine Pass Lng Import Terminal	LA	11/24/2004	Firewater Booster Pump Diesel Engines 1-4	Diesel	300 hp ea.	GED, GOP	0.011 lb/hp-hr	BACT-PSD
Mankato Energy Center	MN	12/4/2003	Internal Combustion Engine, Large	Diesel	1850 hp	GCP	0.028 lb/hp-hr	BACT-PSD
Mankato Energy Center	MN	12/4/2003	Internal Combustion Engine, Small	Diesel	290 hp	GCP	0.013 lb/hp-hr	BACT-PSD
Chocolate Bayou Plant	TX	3/24/2003	Diesel Start-Up Engine, Gt-Sugen	Diesel		None Indicated	21.6 lb/hr	Other Case-by-Case
Duke Energy Stephens, LLC Stephens Energy	OK	3/21/2003	IC Engine, Backup Generator, Diesel	Diesel	749 bph	GED, Limited Operation	2.16 lb/MMBtu	BACT-PSD
Duke Energy Stephens, LLC Stephens Energy	OK	3/21/2003	IC Engine, Fire Water Pump	Diesel	265 bph	GED, Limited Operation	4.41 lb/MMBtu	BACT-PSD
Wallula Power Plant	WA	1/3/2003	IC Generator, Emergency Diesel	Diesel			568 ppmvd @ 15% O_2	Other Case-by-Case
Volatile Organic Compounds (VOC)								
Arsenal Hill Power Plant	LA	3/20/2008	DFP Diesel Fire Pump	Diesel	310 hp	LSF, Limited Operation, Maintenance	0.00248 lb/hp-hr	BACT-PSD
Fairbault Energy Park	MN	6/5/2007	Emergency Generator	Diesel	1750 KW		0.0007 lb/hp-hr	BACT-PSD
Fairbault Energy Park	MN	6/5/2007	Emergency Fire Pump	Diesel		GCP	0.36 lb/MMBtu	BACT-PSD
Forsyth Energy Plant	NC	9/29/2005	IC Engine, Emergency Generator	Diesel	11.4 MMBtu/hr		1.04 lb/hr	BACT-PSD
Forsyth Energy Plant	NC	9/29/2005	IC Engine, Emergency Firewater Pump	Diesel	11.4 MMBtu/hr		1.04 lb/hr	BACT-PSD
Crescent City Power	LA	6/6/2005	Diesel Fired Water Pump	Diesel		GED, GOP	0.05 lb/hr	BACT-PSD
Duke Energy Hanging Rock Energy Facility	OH	12/28/2004	(2) Backup Generators	Diesel	500 KW		0.00164 lb/hp-hr	BACT-PSD
Duke Energy Hanging Rock Energy Facility	OH	12/28/2004	(1) Fire Water Pump	Diesel	265 hp		0.00249 lb/hp-hr	BACT-PSD
Sabine Pass Lng Import Terminal	LA	11/24/2004	Firewater Pump Diesel Engines 1-3	Diesel	660 hp ea.	GCP	0.00011 lb/hp-hr	BACT-PSD
Sabine Pass Lng Import Terminal	LA	11/24/2004	Standby Generator Diesel Engines 1-2	Diesel	2220 hp ea.	GCP	0.0022 lb/hp-hr	BACT-PSD
Sabine Pass Lng Import Terminal	LA	11/24/2004	Firewater Booster Pump Diesel Engines 1-4	Diesel	300 hp ea.	GED, GOP	0.00033 lb/hp-hr	BACT-PSD
Mankato Energy Center	MN	12/4/2003	Internal Combustion Engine, Large	Diesel	1850 hp	GCP	0.00026 lb/hp-hr	BACT-PSD
Mankato Energy Center	MN	12/4/2003	Internal Combustion Engine, Small	Diesel	290 hp	GCP	0.00018 lb/hp-hr	BACT-PSD
Duke Energy Washington County LLC	OH	8/14/2003	Emergency Diesel-Fired Generator	Diesel	600 KW	LSF, CC	0.00219 lb/hp-hr	BACT-PSD
Chocolate Bayou Plant	TX	3/24/2003	Diesel Start-Up Engine, Gt-Sugen	Diesel		None Indicated	0.58 lb/hr	Other Case-by-Case
Duke Energy Stephens, LLC Stephens Energy	OK	3/21/2003	IC Engine, Backup Generator, Diesel	Diesel	749 bph	GED	0.00227 lb/hp-hr	BACT-PSD
Duke Energy Stephens, LLC Stephens Energy	OK	3/21/2003	IC Engine, Fire Water Pump	Diesel	265 bph	GED	0.00264 lb/hp-hr	BACT-PSD

TABLE 4-6
SUMMARY OF NO_x, VOC, AND PM LAER AND BACT DETERMINATIONS FOR EMERGENCY ENGINES (2003-2008)

Facility Name	State	Permit Issued	Process Info	Fuel	Throughput	Control Method	Pollutant Limit	Basis
Particulate Matter ($PM/PM_{10}/PM_{2.5}$)								
Arsenal Hill Power Plant	LA	3/20/2008	DFP Diesel Fire Pump	Diesel	310 hp	LSF, Limited Operation, Maintenance	0.00219 lb/hp-hr	BACT-PSD
Fairbault Energy Park	MN	6/5/2007	Emergency Generator	Diesel	1750 KW		0.0004 lb/hp-hr	BACT-PSD
Fairbault Energy Park	MN	6/5/2007	Emergency Fire Pump	Diesel		GCP	0.31 lb/MMBtu	BACT-PSD
Blythe Energy Project II	CA	4/25/2007	Fire Pump	Diesel	303 hp		0.00033 lb/hp-hr	BACT-PSD
FPL West County Energy Center	FL	1/10/2007	(4) 2250 KW Emergency Generators	Diesel			0.4 g/bhp-hr	BACT-PSD
FPL West County Energy Center	FL	1/10/2007	One Emergency Fire Pump	Diesel			0.4 g/bhp-hr	BACT-PSD
Forsyth Energy Plant	NC	9/29/2005	IC Engine, Emergency Generator	Diesel	11.4 MMBtu/hr		1.14 lb/hr	BACT-PSD
Forsyth Energy Plant	NC	9/29/2005	IC Engine, Emergency Firewater Pump	Diesel	11.4 MMBtu/hr		1.14 lb/hr	BACT-PSD
Crescent City Power	LA	6/6/2005	Diesel Fired Water Pump	Diesel		GED, GOP	0.14 lb/hr	BACT-PSD
Duke Energy Hanging Rock Energy Facility	OH	12/28/2004	(2) Backup Generators	Diesel	500 KW		0.00088 lb/hp-hr	BACT-PSD
Sabine Pass Lng Import Terminal	LA	11/24/2004	Firewater Pump Diesel Engines 1-3	Diesel	660 hp ea.	GCP	0.00188 lb/hp-hr	BACT-PSD
Sabine Pass Lng Import Terminal	LA	11/24/2004	Standby Generator Diesel Engines 1-2	Diesel	2220 hp ea.	GCP	0.00088 lb/hp-hr	BACT-PSD
Sabine Pass Lng Import Terminal	LA	11/24/2004	Firewater Booster Pump Diesel Engines 1-4	Diesel	300 hp ea.	GED, GOP, and LSF	0.0002 lb/hp-hr	BACT-PSD
Mankato Energy Center	MN	12/4/2003	Internal Combustion Engine, Large	Diesel	1850 hp	GCP	0.00015 lb/hp-hr	BACT-PSD
Mankato Energy Center	MN	12/4/2003	Internal Combustion Engine, Small	Diesel	290 hp	GCP	0.00015 lb/hp-hr	BACT-PSD
Chocolate Bayou Plant	TX	3/24/2003	Diesel Start-Up Engine, Gt-Sugen	Diesel		None Indicated	0.63 lb/hr	BACT-PSD
Duke Energy Stephens, LLC Stephens Energy	OK	3/21/2003	IC Engine, Backup Generator, Diesel	Diesel	749 bhp	CC, GED	0.124 lb/MMBtu	BACT-PSD
Duke Energy Stephens, LLC Stephens Energy	OK	3/21/2003	IC Engine, Fire Water Pump	Diesel	265 bhp	CC, GED	0.31 lb/MMBtu	BACT-PSD

Source: EPA 2008 (RBLC database); Golder, 2008
Note: GED = Good Engine Design; GCP= good combustion practices; GOP = good operating practices; LSF= low sulfur fuel; CC = combustion control

TABLE 4-7
SUMMARY OF CO AND SO2 BACT DETERMINATIONS FOR EMERGENCY ENGINES (2003-2008)

Facility Name	State	Permit Issued	Process Info	Fuel	Heat Input	Control Method	Pollutant Limit	Basis
Carbon Monoxide (CO)								
Arsenal Hill Power Plant	LA	03/20/2008	DFP Diesel Fire Pump	Diesel	310 hp	LSF, Limited Operation, Maintenance	3.0 g/bhp-hr	BACT-PSD
Fairbault Energy Park	MN	06/05/2007	Emergency Generator	Diesel	1750 KW	GCP	2.5 g/bhp-hr	BACT-PSD
Blythe Energy Project	CA	04/25/2007	Fire Pump	Diesel	303 hp		1.0 g/bhp-hr	BACT-PSD
Progress Bartow Power Plant	FL	01/26/2007	Nominal 300 Hp Emergency Diesel Fire Pump	Diesel		GCP	2.6 g/bhp-hr	BACT-PSD
FPL West County Energy Center	FL	01/10/2007	Four 2250 KW Emergency Generators	Diesel		GCP	8.5 g/bhp-hr	BACT-PSD
FPL West County Energy Center	FL	01/10/2007	One Emergency Diesel Fire Pump	Diesel		GCP	2.6 g/bhp-hr	BACT-PSD
Forsyth Energy Plant	NC	09/29/2005	IC Engine, Emergency Generator	Diesel	11.4 MMBtu/hr		9.69 lb/hr	BACT-PSD
Forsyth Energy Plant	NC	09/29/2005	IC Engine, Emergency Firewater Pump	Diesel	11.4 MMBtu/hr		9.69 lb/hr	BACT-PSD
Crescent City Power	LA	06/06/2005	Diesel Fired Water Pump	Diesel		GED, GOP	1.88 lb/hr	BACT-PSD
Duke Energy Washington County Llc	OH	05/09/2005	Emergency Diesel-Fired Generator	Diesel	600 KW	LSF, CC	15.2 lb/hr	BACT-PSD
Duke Energy Washington County Llc	OH	05/09/2005	Emergency Diesel Fire Pump Engine	Diesel	400 hp	LSF, CC	2.76 lb/hr	BACT-PSD
Duke Energy Hanging Rock Energy Facility	OH	12/28/2004	(2) CT (Siemens SGT6-5000f) w/ DB	Diesel	500 KW		12.6 lb/hr	BACT-PSD
Duke Energy Hanging Rock Energy Facility	OH	12/28/2004	Fire Water Pump (1)	Diesel	265 hp		1.8 lb/hr	BACT-PSD
Sabine Pass Lng Import Terminal	LA	11/24/2004	Firewater Pump Diesel Engines 1-3	Diesel	660 hp ea.	GED, GOP	0.55 lb/hr	BACT-PSD
Sabine Pass Lng Import Terminal	LA	11/24/2004	Standby Generator Diesel Engines 1-2	Diesel	2220 hp ea.	GED, GOP	41.6 lb/hr	BACT-PSD
Sabine Pass Lng Import Terminal	LA	11/24/2004	Firewater Booster Pump Diesel Engines 1-4	Diesel	300 hp ea.	GED, GOP	0.18 lb/hr	BACT-PSD
Fairbault Energy Park	MN	07/15/2004	Large IC Engine	Diesel	670 hp	GCP	0.76 lb/MMBtu	BACT-PSD
Fairbault Energy Park	MN	07/15/2004	Small IC Engine	Diesel	250 hp	GCP	0.95 lb/MMBtu	BACT-PSD
Mankato Energy Center	MN	12/04/2003	Internal Combustion Engine, Large	Diesel	1850 hp	GCP	1 g/bhp-hr	BACT-PSD
Mankato Energy Center	MN	12/04/2003	Internal Combustion Engine, Small	Diesel	290 hp	GCP	0.25 g/bhp-hr	N/A
Chocolate Bayou Plant	TX	03/24/2003	Diesel Start-Up Engine, Gt-Sugen	Diesel		NONE INDICATED	4.95 lb/hr	BACT-PSD
Duke Energy Stephens, LLC Stephens Energy	OK	03/21/2003	IC Engine, Backup Generator	Diesel	749 bhp	GED, GCP	2.66 lb/MMBtu	BACT-PSD
Duke Energy Stephens, LLC Stephens Energy	OK	03/21/2003	IC Engine, Fire Water Pump	Diesel	265 bhp	GED, GCP	0.95 lb/MMBtu	BACT-PSD
Sulfur Dioxide (SO_2)								
Arsenal Hill Power Plant	LA	03/20/2008	DFP Diesel Fire Pump	Diesel	310 hp	LSF, Limited Operation, Maintenance	0.64 lb/hr	BACT-PSD
Fairbault Energy Park	MN	06/05/2007	Emergency Generator	Diesel	1750 KW	LSF max. S 0.05%	4E-04 lb/hp-hr	BACT-PSD
FPL West County Energy Center	FL	01/10/2007	Four 2250 KW Emergency Generators	Diesel		LSF (0.0015% S fuel)	0.002 percent S fuel oil	BACT-PSD
Forsyth Energy Plant	NC	09/29/2005	IC Engine, Emergency Generator	Diesel	11.4 MMBtu/hr		0.58 lb/hr	BACT-PSD
Forsyth Energy Plant	NC	09/29/2005	IC Engine, Emergency Firewater Pump	Diesel	11.4 MMBtu/hr		0.58 lb/hr	BACT-PSD
Crescent City Power	LA	06/06/2005	Diesel Fired Water Pump	Diesel		GED, GOP	0.61 lb/hr	BACT-PSD
Duke Energy Washington County LLC	OH	05/09/2005	Emergency Diesel-Fired Generator	Diesel	600 KW	LSF, CC	0.4 lb/hr	BACT-PSD
Duke Energy Washington County LLC	OH	05/09/2005	Emergency Diesel Fire Pump Engine	Diesel	400 hp	LSF, CC	0.84 lb/hr	BACT-PSD
Duke Energy Hanging Rock Energy Facility	OH	12/28/2004	Backup Generators (2)	Diesel	500 KW	LSF	0.27 lb/hr	BACT-PSD
Duke Energy Hanging Rock Energy Facility	OH	12/28/2004	Fire Water Pump (1)	Diesel	265 hp	LSF	0.1 lb/hr	BACT-PSD
Fairbault Energy Park	MN	07/15/2004	IC Engine, Large, Fuel Oil (1)	Diesel	670 hp	LSF	0.051 lb/MMBtu	BACT-PSD
Fairbault Energy Park	MN	07/15/2004	IC Engine, Small, Fuel Oil (1)	Diesel	250 hp	LSF	0.051 lb/MMBtu	BACT-PSD
Mankato Energy Center	MN	12/04/2003	Internal Combustion Engine, Large	Diesel	1850 hp	LSF	0.59 g/bhp-hr	BACT-PSD
Mankato Energy Center	MN	12/04/2003	Internal Combustion Engine, Small	Diesel	290 hp	LSF	0.14 g/bhp-hr	BACT-PSD
Chocolate Bayou Plant	TX	03/24/2003	Diesel Start-Up Engine, Gt-Sugen	Diesel		NONE INDICATED	2.91 lb/hr	Other Case-by-Case
Duke Energy Stephens, LLC Stephens Energy	OK	03/21/2003	IC Engine, Backup Generator, Diesel	Diesel	749 bhp	LSF (< 0.05% S BY WT)	0.3 lb/hr	BACT-PSD
Duke Energy Stephens, LLC Stephens Energy	OK	03/21/2003	IC Engine, Fire Water Pump	Diesel	265 bhp	LSF (< 0.05% S BY WT)	0.5 lb/hr	BACT-PSD
Wallula Power Plant	WA	01/03/2003	IC Engine, Fire Pump, Diesel	Diesel		LSF (< 0.05% S BY WT)		Other Case-by-Case

Source: EPA 2008 (RBLC database); Golder, 2008
Note: GED = Good Engine Design; GCP= good combustion practices; GOP = good operating practices; LSF= low sulfur fuel; CC = combustion control

TABLE 4-8
SUMMARY OF BACT DETERMINATIONS FOR COOLING TOWERS (2003-2008)

Facility Name	State	Permit Issued	Process Info	Throughput	Control Method	Pollutant Limit	Basis
Arsenal Hill Power Plant	LA	3/20/2008	Cooling Tower	140,000 gal/min	Use Of Mist Eliminators	1.4 lb/hr	BACT-PSD
FPL West County Energy Center	FL	1/10/2007	(2) Cooling Tower (26 Cell Mechanical Draft)	306,000 gal/min	Drift Eliminators, Max 0.0005% DR	1.2 lb/hr	
Forsyth Energy Plant	NC	9/29/2005	Cooling Tower	3,834 gal/min		0.007 lb/hr	BACT-PSD
Forsyth Energy Plant	NC	9/29/2005	Cooling Tower	3,834 gal/min		0.002 lb/hr	BACT-PSD
Wanapa Energy Center	OR	8/8/2005	Cooling Tower	6.2 ft^3/s	Drift Eliminators, Max 0.0005% DR	3532 ppmw	BACT-PSD
Public Serices Company of Colorado	CO	7/5/2005	Cooling Tower	140,650 gal/min	Drift Eliminators, Max 0.0005% DR		BACT-PSD
Crescent City Power	LA	6/6/2005	Main Cooling Tower	290,200 gal/min	Drift Eliminators	2.61 lb/hr	BACT-PSD
Auburn Nugget	IA	5/31/2005	Cooling Tower	290,200 gal/min	PM - 0.0050% of throughput	20 % (opacity)	BACT-PSD
Newmant Nevada Energy Investment, LLC	NV	5/5/2005	Cooling Tower		Drift Eliminators, PM_{10} - 0.0005% drift		BACT-PSD
Ingen-Nassau Energy Corporation	NY	3/31/2005	Cooling Tower		PM_{10} - 0.0005% drift		BACT-PSD
Omaha Public Power District	NE	3/9/2005	Cooling Tower			0.001 lb/hr (PM_{10})	BACT-PSD
BP Cherry Point Cogeneration Project	WA	1/11/2005	Cooling Tower		Drift Eliminators, Max 0.001% DR	1.64 lb/hr	BACT-PSD
Duke Energy Hanging Rock Energy Facility	OH	12/28/2004	(2) Cooling Tower (10 Cell Mechanical Draft)		Drift Eliminators, Max 0.001% DR	2.6 lb/hr	BACT-PSD
Duke Energy Washington County LLC	OH	5/9/2005	Cooling Tower			2.08 lb/hr	BACT-PSD
Chocolate Bayou Plant	TX	3/24/2003	Cooling Water Tower (2 Cells)		None Indicated	0.54 lb/hr	Other Case-by-Case
Duke Energy Stephens, LLC Stephens Energy	OK	3/21/2003	Cooling Tower		Drift Eliminators	1.2 lb/hr	BACT-PSD
Wallula Power Plant	WA	1/3/2003	Cooling Tower		Water Pretreatment, 0.0005% DR	3.7 lb/hr	Other Case-by-Case
Wallula Power Plant	WA	1/3/2003	Cooling Tower		Water Treatment, 0.0005% DR	3.7 lb/hr	LAER

Source: EPA 2008 (RBLC database); Golder, 2008
Note: DR = Drift rate

5.0 AMBIENT MONITORING ANALYSIS

The CAA requires that an air quality analysis be conducted for each criteria and non-criteria pollutant subject to regulation under the Act before a major stationary source is constructed. Criteria pollutants are those pollutants for which AAQS have been established. Non-criteria pollutants are those pollutants that may be regulated by emission standards, but no AAQS have been established. This analysis may be performed by the use of modeling and/or by monitoring the air quality. In addition, if EPA has not established an acceptable ambient monitoring method for the pollutant, monitoring is not required.

Based on the estimated emissions from the proposed Project (see Table 3-3), pre-construction ambient monitoring analyses for SO_2, PM_{10}, NO_2, CO, O_3 (based on NO_x and VOC emissions), and SAM are required to be submitted as part of the application. The ambient monitoring analysis requirement may be waived if it can be demonstrated that the proposed source's maximum air quality impacts will not exceed the PSD *de minimis* concentration levels and, for O_3 (based on NO_x and VOC emissions), NO_x or VOC emission level of 100 TPY.

As shown in Table 3-4, the proposed Project's impacts are predicted to be below the applicable *de minimis* monitoring concentrations for all pollutants. For O_3, the Project's NO_x and VOC emissions are greater than the monitoring emission level of 100 TPY. Existing ambient O_3 air quality data from the region are presented in Table 5-1, which demonstrate attainment of the AAQS. Therefore, Live Oaks requests that these data be used to satisfy the preconstruction monitoring requirements for O_3.

For SAM, which is a non-criteria pollutant, the Project's emissions are greater than the significant emission rate, as shown in Table 3-3. The EPA has established no acceptable monitoring method for this pollutant. Therefore, Live Oaks requests an exemption from the preconstruction monitoring requirement for SAM and O_3 in accordance with the PSD regulations.

TABLE 5-1
SUMMARY OF MAXIMUM O3 CONCENTRATIONS MEASURED NEAR THE PROJECT SITE
LIVE OAKS POWER PROJECT, GLYNN COUNTY, GEORGIA

AQS Site ID.	Site Location City, State	County	Address	UTM Coordinates (km) East	North	Distance from Project (km)	Year	Concentration (ppm) 8-Hour 3-year Average 4th Highest Value
Ozone [a]							**Georgia AAQS**	**0.08 ppm**
13-127-0006	Brunswick, GA	Glynn	Risley Middle School	452.7	3,448.5	14.0	2005-2007	0.065
			2900 Albany Street, Bruns				2004-2006	0.068
							2003-2006	0.068
13-051-0021	Savannah, GA	Chatham	2500 E. President Street, Bldg-A	495.4	3,548.1	99.5	2005-2007	0.067
							2004-2006	0.069
							2003-2006	0.069
12-031-0077	Jacksonville, FL	Duval	13333 Lanier Road	443.6	3,371.8	89.5	2005-2007	0.077
							2004-2006	0.077
							2003-2006	0.073
12-031-0100	Jacksonville, FL	Duval	13600 William Davis Parkway	456.3	3,347.8	113.9	2005-2007	0.077
							2004-2006	0.077
							2003-2006	0.079

Note:
AAQS = ambient air quality standard.

[a] On July 18, 1997, EPA promulgated revised AAQS for O_3. The O_3 standard was modified to be 0.08 ppm for the 8-hour average; achieved when the 3-year average of 4th highest value is 0.08 ppm or less.

Source: EPA AirData Monitor Values Reports, 2003 - 2007.

6.0 AIR QUALITY IMPACT ANALYSIS

6.1 Significant Impact Analysis Approach

6.1.1 In Site Vicinity

The general modeling approach followed the EPA and Georgia EPD modeling guidelines for determining compliance with AAQS and PSD increments. For all criteria pollutants that will be emitted in excess of the PSD significant emission rate due to a proposed project, a significant impact analysis is performed to determine whether the emission and/or stack configuration changes due to the project alone will result in predicted impacts that are in excess of the EPA significant impact levels. For the proposed Project, emission increases above the PSD significant emission rate occur for the following criteria pollutants:

- SO_2,
- NO_x,
- PM_{10}, and
- CO.

If project-only impacts are above the significant impact levels in the vicinity of the facility, then two additional and more detailed air modeling analyses are required. The first analysis demonstrates compliance with federal and Georgia AAQS, and the second analysis demonstrates compliance with allowable PSD Class II increments. Current Georgia EPD policies stipulate that the highest annual average and highest short-term (i.e., 24 hours or less) concentrations are to be compared to the applicable significant impact levels. If the receptor spacing in the area in which the maximum predicted concentrations occur is greater than 100 meters (m), additional modeling refinements with a denser receptor grid are performed to reduce the final receptor resolution to 100 m or less.

6.1.2 At PSD Class I Area(s)

Generally, if a major new facility is located within 200 km of a PSD Class I area, then a significant impact analysis is also performed to evaluate the impact due to the project alone at the PSD Class I area. The Wolf Island and Okefenokee NWAs, located about 23 and 64 km from the Project site, respectively, are the only PSD Class I areas that are within 200 km from the Project site. At the request of the Federal Land Managers (FLM), the maximum predicted impacts at PSD Class I areas within 200 km of the project are compared to EPA's proposed significant impact levels for PSD Class

I areas. The recommended levels are the currently accepted criteria to determine whether a proposed project will incur a significant impact on a PSD Class I area. If project-only impacts at the PSD Class I area are above the proposed EPA PSD Class I significant impact levels, then a cumulative analysis is performed to demonstrate compliance with allowable PSD Class I increments at the PSD Class I area.

For each pollutant emitted in excess of the EPA significant emission rate, additional analyses are required to determine the proposed project's impact on Air Quality Related Values (AQRV) at a PSD Class I area. For the Wolf Island NWA and Okefenokee NWA PSD Class I areas, the AQRVs are visibility impairment and acid deposition. For the Wolf Island NWA PSD Class I area, which is located within 50 km of the proposed project site, visibility impairment takes the form of plume blight. For the Okefenokee NWA PSD Class I area, which is located beyond 50 km from the proposed project site, visibility impairment takes the form of regional haze. Visibility impairment is determined for a 24-hour averaging time. For deposition, the total nitrogen and total sulfur depositions are predicted for an annual time period.

6.2 Preconstruction Monitoring Analysis Approach

The general modeling approach followed EPA and Georgia EPD modeling guidelines. The project's impacts were compared to the *de minimis* monitoring levels to determine whether it would be necessary to submit continuous monitoring data to Georgia EPD prior to construction. For all applicable pollutants that have emission increases that will exceed the PSD significant emission rate due to a proposed project, a *de minimis* impact analysis is performed to determine whether the project alone will result in predicted impacts that will exceed the EPA *de minimis* levels at any off-plant property areas in the vicinity of the plant. Current Georgia EPD policies stipulate that the highest annual average and highest short-term concentrations are to be compared to the applicable *de minimis* monitoring levels.

A proposed major stationary facility or major modification may be exempt from the monitoring requirements with respect to a particular pollutant if the emissions increase of the pollutant from the facility or modification would cause, in any area, air quality impacts less than the *de minimis* levels.

For this project, the project's impacts were calculated in the vicinity of the plant for comparison to *de minimis* levels following Georgia EPD policies. As presented in Section 5.0, since the project's maximum predicted pollutant impacts are below the *de minimis* concentration levels, the project is exempt from preconstruction ambient monitoring requirements for each evaluated pollutant.

6.3 Air Modeling Analysis Approach

6.3.1 General Procedures

As stated in the previous sections, for each pollutant which is emitted above the significant emission rate, air modeling analyses are required to determine if the project's impacts are predicted to be greater than the significant impact levels and *de minimis* monitoring levels. These analyses consider the project's impacts alone. Air quality impacts are predicted using 5 years of meteorological data and selecting the highest annual and the highest short-term concentrations for comparison to the significant impact levels and *de minimis* levels.

If the project's impacts are greater than the significant impact levels, the air modeling analyses must consider other nearby sources and background concentrations, and calculate the cumulative impact of these sources for comparison to ambient standards. In general, when 5 years of meteorological data are used in the analysis, the highest annual and the HSH concentrations are compared to the applicable AAQS and allowable PSD increments. The HSH concentration is calculated for a receptor field by:

1. Eliminating the highest concentration predicted at each receptor;
2. Identifying the second-highest concentration at each receptor; and
3. Selecting the highest concentration among these second-highest concentrations.

This approach is consistent with air quality standards and allowable PSD increments, which permit a short-term average concentration to be exceeded once per year at each receptor.

Concentrations are predicted using an extensive receptor grid and a 5-year meteorological data record. If the highest concentration is predicted at a receptor that lies in an area where the receptor spacing is more than 100 m, then a refined analysis is performed in that area using a receptor grid of

greater resolution. Modeling refinements are performed using a receptor spacing of 100 m with a receptor grid centered on the screening receptor at which the maximum concentration was predicted. The air dispersion model is then executed with the refined grid for the entire year of meteorology during which the screening concentration occurred. If the maximum project impacts are predicted in an area where the receptor spacing is 100 m or less, no additional modeling refinements are performed.

6.3.2 Model Selection

The selection of one or more air quality models to estimate maximum air quality impacts must be based on the models' ability to simulate impacts in all areas surrounding the project site. For predicting concentrations at receptors that are located within 50 km of a project, the Georgia EPD recommends using the American Meteorological Society and EPA Regulatory Model (AERMOD) dispersion model. Similarly, the AERMOD model was used for predicting air quality impacts at the Wolf Island NWA. For predicting concentrations at receptors that are located more than 50 km from the project, the California Puff model (CALPUFF) is recommended for use by the EPA and the FLM. The CALPUFF model was selected and used for predicting concentrations at the Okefenokee NWA.

The AERMOD model calculates hourly concentrations based on hourly meteorological data and is applicable for most applications since it is recognized as containing the latest scientific algorithms for simulating plume behavior in all types of terrain.

AERMOD Version 07026 is the most recent available version on EPA's Internet web site: Support Center for Regulatory Air Models (SCRAM) within the Technology Transfer Network. A listing of AERMOD features is presented in Table 6-1.

The CALPUFF model [Version 5.8 (i.e., current EPA-approved version for regulatory use)] is maintained by the EPA on the SCRAM internet website. A listing of CALPUFF model features is presented in Table 6-2.

The CALPUFF model is a long-range transport model applicable for estimating the air quality impacts at areas that are more than 50 km from a source. The methods and assumptions used in the CALPUFF model are based on the latest recommendations for modeling analyses as presented in the following reports:

- The Interagency Workgroup on Air Quality Models (IWAQM), Phase 2 Summary Report and Recommendations for Modeling Long Range Transport Impacts;[29] and
- The Federal Land Manager's Air Quality Relative Values Workgroup (FLAG) Phase I Report (December 2000).

Since the entire Okefenokee NWA PSD Class I area is beyond 50 km from the Project site, the CALPUFF model was used to predict maximum pollutant impacts at that area. In addition, CALPUFF was used to predict the Project's potential impact on visibility in the form of regional haze and the annual deposition of total sulfur and nitrogen at the Okefenokee NWA. Because of CALPUFF's ability to account for pollutant reactions and transformations in the atmosphere, the model was also used to predict annual deposition of total sulfur and nitrogen at the Wolf Island NWA.

For modeling analyses that will undergo regulatory review, such as PSD permit applications, the following model features are recommended by EPA and are incorporated as the regulatory default options in the AERMOD model and, where applicable, the CALPUFF model:

1. Final plume rise at all receptor locations,
2. Stack-tip downwash,
3. Buoyancy-induced dispersion,
4. Default wind speed profile coefficients for rural mode,
5. Default vertical potential temperature gradients, and
6. Calm wind processing.

For this project, the EPA regulatory default options were used to address maximum impacts.

The AERMOD and CALPUFF models were used to provide maximum pollutant concentrations for the annual and 24-, 8-, 3-, and 1-hour averaging times. Initially, a CT load analysis is conducted to determine the maximum impact due to the two CTs for a range of possible operating loads and ambient temperatures. For the CT load analysis, a generic emission rate of 10 grams per second (g/s) is used to represent the emissions of the proposed CT sources. Maximum pollutant-specific air impacts for the CTs were then determined by multiplying the maximum pollutant-specific emission

[29] IWAQM Phase 2 Report, EPA-454/R-98-019, December 1998

rate, in pounds per hour, by the maximum predicted generic impact divided by 79.365 lb/hr (10 g/s). The concentrations from the CT load analysis are based on natural gas firing for 2 CTs operating all year. The following CT loads and ambient temperatures produced the highest CT impacts and were used for subsequent pollutant-specific significant impact analyses, which included the impacts of the gas-fired heater and cooling tower:

At Site Vicinity:

- SO_2 Base Load, 95°F;
- PM_{10} Base Load, 95°F;
- NO_2 Base Load, 59°F, with duct firing for 4,000 hours; and
- CO Base Load, 95°F.

At Wolf Island NWA PSD Class I Area

- SO_2 Base Load, 20°F;
- PM_{10} Base Load, 20°F;
- NO_2 Base Load, 59°F, with duct firing for 4,000 hours for annual average and Base Load, 20°F for short-term.

At Okefenokee NWA PSD Class I Area

- SO_2 Base Load, 20°F
- PM_{10} Base Load, 20°F
- NO_2 Base Load, 20°F

For predicting impacts at the Okefenokee NWA, the CT operating load and ambient temperature, which produced the largest emission rates was used in the modeling analysis. The maximum project only impacts are compared to the PSD Class I and Class II significant impact levels and the de-minimis monitoring levels. Per EPA air modeling guidelines, an NO_2/NO_x ratio of 75-percent is assumed for the pollutant-specific NO_2 results.

6.3.3 Meteorological Data

Meteorological data used in AERMOD to determine air quality impacts were provided by the Georgia EPD. The data consists of a concurrent 5-year period of hourly surface weather observations from the National Weather Service (NWS) office located at the Savannah International Airport and twice-daily

upper air soundings from the Charleston International Airport, respectively. Concentrations were predicted using a 5- year period of record from 1990 through 1994.

AERMOD incorporates land use parameters for determining boundary layer parameters that are used for dispersion. In January 2008, EPA released new recommendations for determining the surface land use characteristics in its AERMOD Implementation Guide. The Guide recommends the following procedures:

- Surface roughness length should be based on an inverse-distance weighted geometric mean for the default upwind distance of 1 kilometer relative to the measurement site.
- Bowen ratio should be based on a simple, unweighted geometric mean over a default 10 km by 10 km domain. There should be no direction or distance dependency for the data.
- The albedo should be based on a simple unweighted arithmetic mean for the same domain used for the Bowen ratio.

AERSURFACE Version 08009[30] was used by Georgia EPD to calculate the appropriate surface characteristics. Land cover data was obtained from the U.S. Geological Survey (USGS) National Land Cover Data 1992 archives (NLCD92) in the form of a GeoTIFF file covering the entire state of Georgia. The USGS data were downloaded from the following website:
http://edcftp.cr.usgs.gov/pub/data/landcover/states/

The Savannah/Charleston meteorological data record provided by Georgia EPD for this project contains land use information that was determined from the latest (i.e., January, 2008) regulatory guidance.

6.3.4 Emission Inventory

A summary of the criteria pollutant emission rates, physical stack and stack operating parameters for the proposed CTs used in the air modeling analysis is presented in Tables 2-1 and 2-2. The emission and stack operating parameters presented for 20, 59, and 95°F ambient temperatures for natural gas were used in the modeling to determine the maximum air quality impacts for a range of possible CT

[30] EPA, January 9, 2008.

operating conditions. The proposed CTs will have a stack height of 140 ft and an inner stack diameter of 19.5 ft.

The following CT modeling scenarios were considered:

1. Base operating load with duct-firing at an inlet temperature of 20°F;
2. Base operating load with duct-firing at an inlet temperature of 59°F;
3. Base operating load with duct-firing at an inlet temperature of 95°F;
4. Base operating load with duct-firing, evaporative cooling, and power augmentation at an inlet temperature of 95°F;
5. 70-percent operating load at an inlet temperature of 20°F;
6. 70-percent operating load at an inlet temperature of 59°F; and
7. 70-percent operating load at an inlet temperature of 95°F.

The CT load and temperature that produced the highest impact was then used for the significant impact analysis together with the cooling tower and heater. Based on the results of the significant impact analyses presented in Section 6.4, the maximum project-only impacts for PM_{10}, NO_2, and CO impacts in the near-field of the project site are predicted to be less than the PSD Class II significant impact levels. As a result, detailed analyses are not required to determine compliance with the AAQS and allowable PSD Class II increments for these pollutants. The maximum project-only impacts for SO_2, PM_{10}, and NO_2 at the Wolf Island and Okefenokee NWA are predicted to be less than the proposed PSD Class I significant impact levels. As a result, detailed analyses are not required to determine compliance with the allowable PSD Class I increments for these pollutants.

6.3.5 Building Downwash Effects

Aerodynamic forces in the vicinity of structures and obstacles, such as buildings, disturb atmospheric flow fields. This flow disturbance near buildings and other structures can enhance the dispersion of emissions from stacks affected by the disturbed flow. The disturbance can also reduce the effective height of emissions from stacks located near buildings and obstacles. The height of these disturbances can be compared to the release points of modeled sources. For sources with release points above these disturbances, the effect on dispersion is not significant. This release height threshold is known as the GEP height. GEP stack height is defined in Section 123 of the Clear Air Act Amendments of 1977 as:

> *"the height necessary to ensure that emissions from the stack do not result in excessive concentrations of any air pollutant in the immediate vicinity of the source as a result of atmospheric downwash, eddies, and wakes which may be created by the source itself, nearby structures, or nearby terrain obstacles."*

The EPA Guideline for Determination of Good Engineering Practice Stack Height[31] contains detailed guidance on issues relating to the determination of GEP height. This guidance specifies use of the following formula for "new" stacks (e.g., stacks not in existence until after January 1979) for calculating the minimum stack height for which the adverse aerodynamic effects are avoided:

$$H_{GEP} = H_B + 1.5\ L$$

Where: H_{GEP} = GEP formula stack height

H_B = height of building or nearby structure

L = lesser of the height or projected width of the structure

The formula for stacks in existence before 1979 is:

$$H_{GEP} = 2.5\ H_B$$

Both the height and projected width of the structure are determined from the projection of the structure on a plane perpendicular to the direction of the wind. The downwind area in which a nearby structure is presumed to have a significant effect on a stack is defined as 5L. Therefore, the GEP formula heights calculated by the formulas listed above are only applicable to stacks that are located within 5L of the building or structure in question. All proposed stack heights are less than the calculated GEP formula heights.

The only significant structures in the vicinity of the proposed CT stacks are the proposed CT air filter

[31] Guideline for Determination of Good Engineering Practice Stack Height, EPA June 1985 (EPA-450/4-80-023R).

inlets, CT structure, and the cooling tower structure, which are shown in Figure 6-1. The height and widths of these structures are as follows:

Structure	Height (ft)	Width (ft)	Length (ft)
CT air inlet	82	46	14
HRSG structure	91	50	100
Cooling Tower structure	35	48	480

Building dimensions for the Project's structures were entered into the EPA's Building Profile Input Program (Version 04274) for the purpose of developing wind direction-specific building dimensions for input to AERMOD.

6.3.6 Receptor Locations

Site Vicinity

The modeling analysis used Universal Transverse Mercator (UTM) coordinates from zone 17, North American Datum 1983 (NAD83). Nested Cartesian receptor grids were used in addition to discrete Cartesian receptors along the Live Oaks property boundary restricted property as presented in Figure 6-1. The significant impact analysis used the following receptor spacing:

- 50-m intervals along the property boundary;
- 100-m intervals beyond the property boundary to 2 km;
- 250-m intervals from 2 to 5 km;
- 500-m intervals from 5 to 7 km; and
- 1,000-m intervals from 7 to 10 km.

Modeling refinements were performed, as needed, to ensure that the maximum predicted impacts occur in an area with a receptor resolution no greater than 100 m. Figure 6-2 shows the location of the full receptor grid used for the analysis.

Wolf Island and Okefenokee

A set of 500 and 30 Cartesian discrete receptors were obtained from the National Park Service for the PSD Class I areas of Wolf Island and Okefenokee NWAs, respectively. For modeling with

AERMOD at the Wolf Island NWA, the receptors were converted into UTM coordinates, and NAD83. For modeling with CALPUFF at both PSD Class I areas, Lambert Conformal Conic Coordinates were used.

Receptor elevations and hill scale heights for all receptors were obtained from available 7.5-minute and 1-degree USGS Digital Elevation Model data using the AERMOD terrain preprocessor program AERMAP, Version 06341. The extent of the AERMAP domain was sufficient to include all significant impact analysis receptors.

6.3.7 Toxic Air Pollutant Analysis

Air quality impacts for toxic air pollutants emitted from the Project were predicted using the methods and techniques developed by the Georgia EPD presented in the "*Guideline for Ambient Impact Assessment of Toxic Air Pollutant Emissions*", (Revised June 21, 1998). The AERMOD model was used to provide maximum concentrations for the annual, 24-hour, and 1-hour averaging times. These concentrations were then compared to the AAC obtained from the EPD (Table of Acceptable Ambient Concentrations dated February 8, 1999).

The AAC were generally based on information from the Integrated Risk Information System. The information is presented as unit risk given as a risk per concentration $(\mu g/m^3)^{-1}$ and/or an inhalation reference concentration (RfC) in units of milligrams per cubic meter (mg/m^3). Unit risk estimates are estimated from the risk-based air concentrations (RBACs) that provide a cancer risk of 1 in 1,000,000 for pollutants with an IRIS weight-of-evidence classification of A; 1 in 100,000 with a classification of B; an d1 in 10,000 with a classification of C. The RBAC is calculated by dividing the cancer risk by the unit risk. Both the RfC and RBAC are given as an annual average.

For those pollutants that have a RBAC or RfC as well as a ceiling limit or short-term exposure limit (STEL), both an annual and 15-minute AAC were estimated. The annual AAC was estimated from the RBAC or RfC and a 15-minute AAC was estimated from the ceiling limit of STEL. The ceiling limits or STEL were obtained from exposure limits recommended by the American Conference of Government Industrial Hygienists. If a pollutant did not have a RBAC or RfC, then the 24-hour and 15-minute AAC were estimated from the 8-hour time-weighted average (TWA) and ceiling limit or STEL. The 8-hour TWA is assumed to be equal to the 24-hour AAC.

The exposure toxicity data (TA) acquired from TWAs, STELs, or ceiling limits is adjusted by application of a safety factor. The safety factor accounts for pollutant exposure to members of the public who may be more sensitive to pollutant effects (persons with respiratory maladies, young children, or the elderly) than the average citizen. The recommended formula for application of the safety factor is:

$$AAC = TA \div \text{safety factor}$$

The safety factor recommended adjusting TWAs for a pollutant, which are not know human carcinogens, is 100. For known human carcinogens, the recommended safety factor for adjusting TWAs is 300. The safety factor recommended for an acute sensory irritant (those pollutants with ceiling limits or STELs) is 10.

It should be noted that the 15-minute average concentrations were obtained by multiplying the 1-hour average concentrations by a factor of 1.32 based on methods presented in the EPD's guideline document.

6.4 Air Modeling Results

6.4.1 Site Vicinity

The maximum pollutant concentrations predicted for 2 CTs firing natural gas are presented in Table 6-3. The maximum pollutant concentrations predicted for the proposed CTs, cooling tower, and fuel gas heater are compared to the Class II significant impact levels in Table 6-4. From Table 6-4, the maximum predicted SO_2, PM_{10}, NO_2, and CO impacts due to the proposed Project are all below the significant impact levels. As such, additional detailed modeling analyses for determining compliance with the AAQS and PSD Class II increments are not required.

Also, as the maximum predicted SO_2, PM_{10}, NO_2, and CO impacts due to the proposed Project are less than the *de minimis* monitoring levels, preconstruction monitoring is not required to be submitted as part of this application.

6.4.2 Wolf Island and Okefenokee NWAs

The modeling results performed for the proposed Project at the Wolf Island and Okefenokee NWAs are summarized in Tables 6-5 and 6-6. The maximum pollutant concentrations predicted for the two CTs for a range of operating loads and temperatures are presented in Table 6-5. A summary of maximum pollutant concentrations predicted for the Project compared to the Class I significant impact levels is presented in Table 6-6. As shown in Table 6-6, the maximum predicted SO_2, PM_{10}, and NO_2 impacts due to the proposed Project are below EPA's proposed PSD Class I significant impact levels. Therefore, more detailed modeling analyses for determining compliance with the allowable PSD Class I increments are not required for these pollutants.

Summaries of the AERMOD and CALPUFF results and sample model input files are included in Appendix C.

6.4.3 Air Toxic Pollutants

A summary of the Project's maximum concentration of toxic air pollutants is presented in Table 6-7. As shown in Table 6-7, the maximum concentrations for the Project are predicted to be well below the respective AAC levels. As a result, the Project is not considered to pose an adverse effect on public health.

TABLE 6-1
MAJOR FEATURES OF THE AERMOD MODEL, VERSION 07026

AERMOD Model Features
• Plume dispersion/growth rates are determined by the profile of vertical and horizontal turbulence, vary with height, and use a continuous growth function. • In a convective atmosphere, uses three separate algorithms to describe plume behavior as it comes in contact with the mixed layer lid; in a stable atmosphere uses a mechanically mixed layer near the surface. • Polar or Cartesian coordinate systems for receptor locations can be included directly or by an external file reference. • Urban model dispersion is input as a function of city size and population density; sources can also be modeled individually as urban sources. • Stable plume rise: uses Briggs equations with winds and temperature gradients at stack top up to half-way up to plume rise. Convective plume rise: plume superimposed on random convective velocities. • Procedures suggested by Briggs (1974) for evaluating stack-tip downwash. • Has capability of simulating point, volume, area, and multi-sized area sources. • Accounts for the effects of vertical variations in wind and turbulence (Brower et al., 1998). • Uses measured and computed boundary layer parameters and similarity relationships to develop vertical profiles of wind, temperature, and turbulence (Brower et al., 1998). • Concentration estimates for 1-hour to annual average times. • Creates vertical profiles of wind, temperature, and turbulence using all available measurement levels. • Terrain features are depicted by use of a controlling hill elevation and a receptor point elevation. • Modeling domain surface characteristics are determined by selected direction and month/season values of surface roughness length, Albedo, and Bowen ratio. • Contains both a mechanical and convective mixed layer height, the latter based on the hourly accumulation of sensible heat flux. • The method of Pasquill (1976) to account for buoyancy-induced dispersion. • A default regulatory option to set various model options and parameters to EPA-recommended values. • Contains procedures for calm-wind and missing data for the processing of short term averages.

Note: AERMOD = American Meteorological Society and Environmental Protection Agency Regulatory Model.

Source: Paine et al., 2007.

TABLE 6-2
MAJOR FEATURES OF THE CALPUFF MODEL, VERSION 5.8

CALPUFF Model Features
• Source types: Point, line (including buoyancy effects), volume, area (buoyant, non-buoyant). • Non-steady-state emissions and meteorological conditions (time-dependent source and emission data; gridded 3-dimensional wind and temperature fields; spatially-variable fields of mixing heights, friction velocity, precipitation, Monin-Obukhov length; vertically and horizontally-varying turbulence and dispersion rates; time-dependent source and emission data for point, area, and volume sources; temporal or wind-dependent scaling factors for emission rates). • Efficient sampling function (integrated puff formulation; elongated puff (slug) formation). • Dispersion coefficient options (Pasquill-Gifford values for rural areas; McElroy-Pooler values for urban areas; CTDM values for neutral/stable; direct measurements or estimated values). • Vertical wind shear (puff splitting; differential advection and dispersion). • Plume rise (buoyant and momentum rise; stack-tip effects; building downwash effects; partial plume penetration above mixing layer). • Building downwash effects (Huber-Snyder method; Schulman-Scire method, PRIME). • Complex terrain effects (steering effects in CALMET wind field; puff height adjustments using ISC model method or plume path coefficient; enhanced vertical dispersion used in CTDMPLUS). • Subgrid scale complex terrain (CTSG option) (CTDM flow module; dividing streamline as in CTDMPLUS). • Dry deposition (gases and particles; options for diurnal cycle per pollutant, space and time variations with a resistance model, or none). • Overwater and coastal interaction effects (overwater boundary layer parameters; abrupt change in meteorological conditions, plume dispersion at coastal boundary; fumigation; option to use Thermal Internal Boundary Layers into coastal grid cells). • Chemical transformation options (Pseudo-first-order chemical mechanisms for SO_2, SO_4, HNO_3, and NO_3; Pseudo-first-order chemical mechanisms for SO_2, SO_4, NO, NO_2, HNO_3, and NO_3 (RIVAD/ARM3 method); user-specified diurnal cycles of transformation rates; no chemical conversions). • Wet removal (scavenging coefficient approach; removal rate as a function of precipitation intensity and type). • Graphical user interface. • Interface utilities (scan ISC-PRIME and AUSPLUME meteorological data files for problems; translate ISC-PRIME and AUSPLUME input files to CALPUFF input files)

Note: CALPUFF = California Puff Model

Source: EPA, 2007.

TABLE 6-3
LOAD ANALYSIS RESULTS FOR THE TWO CTS FIRING NATURAL GAS
IN COMBINED-CYCLE OPERATION IN THE PROJECT VICINITY

Pollutant	Maximum Emission Rates (lb/hr) by Operating Load and Air Temperature							Averaging Time	Maximum Predicted Concentrations (ug/m3) by Operating Load and Air Temperature [a]						
	Base Load with Duct Burning				70% Load				Base Load with Duct Burning				70% Load		
	20°F	59°F	95°F	95°F PA	20°F	59°F	95°F		20°F	59°F	95°F	95°F PA	20°F	59°F	95°F
Generic [b] (10 g/s)	79.37	79.37	79.37	79.37	79.37	79.37	79.37	Annual	0.3533	0.3884	0.4346	0.3950	0.4794	0.5157	0.5567
								24-Hour	4.7702	5.2494	5.6649	5.2849	6.3509	7.0214	7.5112
								8-Hour	10.6133	11.6573	12.8432	11.8521	13.8400	14.6339	15.4646
								3-Hour	11.8908	12.8409	14.2531	13.0756	15.5819	16.8744	18.3175
								1-Hour	15.7037	16.6726	17.7623	16.8113	18.5763	19.2366	20.4593
SO_2	11.40	10.60	9.80	10.40	7.50	6.89	6.29	Annual	0.0507	0.0519	0.0537	0.0518	0.0453	0.0448	0.0441
								24-Hour	0.6852	0.7011	0.6995	0.6925	0.6000	0.6096	0.5949
								3-Hour	1.7080	1.7150	1.7600	1.7134	1.4722	1.4649	1.4508
PM_{10}	25.20	23.40	23.40	23.00	18.00	17.80	17.60	Annual	0.1122	0.1145	0.1281	0.1145	0.1087	0.1157	0.1234
								24-Hour	1.5146	1.5477	1.6702	1.5315	1.4404	1.5748	1.6657
NO_x	46.60	43.40	40.20	42.80	30.80	28.40	25.80	Annual	0.207	0.212	0.220	0.213	0.186	0.185	0.181
CO	32.40	31.80	30.80	30.40	15.20	14.00	12.80	8-Hour	4.33	4.67	4.98	4.54	2.65	2.58	2.49
								1-Hour	6.41	6.68	6.89	6.44	3.56	3.39	3.30

[a] Concentrations are based on highest predicted concentrations from AERMOD using five years of meteorological data for 1990 to 1994 consisting of surface and upper air data from the National Weather Service stations at Savannah Municipal Airport and Charleston International Airport, respectively.

[b] Pollutant concentrations were based on a modeled or generic concentration predicted using a modeled emission rate of 79.37 lb/hr (10 g/s). Pollutant-specific concentrations were then estimated by multiplying the modeled concentration (at 10 g/s) by the ratio of the pollutant-specific emission rate to the modeled emission rate of 10 g/s.

TABLE 6-4
SUMMARY OF MAXIMUM CONCENTRATIONS PREDICTED FOR PROPOSED PROJECT COMPARED TO EPA CLASS II SIGNIFICANT IMPACT LEVELS

Pollutant	Averaging Time	Maximum Concentration ($\mu g/m^3$) [a, b]	EPA Class II Significant Impact Levels (ug/m^3)
SO_2	Annual	0.0595	1
	24-Hour	0.7173	5
	3-Hour	1.7752	25
PM_{10}	Annual	0.153	1
	24-Hour	1.912	5
NO_2 [c, d]	Annual	0.651	1
CO	8-Hour	26.8	500
	1-Hour	41.0	2,000

[a] Concentrations are based on highest predicted concentrations from AERMOD using five years of meteorological data for 1990 to 1994 consisting of surface and upper air data from the National Weather Service stations at Savannah and Charleston International Airports, respectively.

[b] Based on two combustion turbines (CTs), one fuel gas heater (FGH), and the cooling tower. CTs at baseload, 95°F, unless otherwise indicated.

[c] Based on steady-state operation only. Annual concentration for NO_2 based on CTs firing at baseload, 59 °F, with duct burning for 4,000 hours and without duct firing for 4,760 hours.

[d] NO_x to NO_2 conversion factor of 0.75 applied to modeled NO_x impacts based on EPA Modeling Guidelines

TABLE 6-5
LOAD ANALYSIS RESULTS FOR THE TWO CTS FIRING NATURAL GAS
IN COMBINED-CYCLE OPERATION AT THE WOLF ISLAND NWA CLASS I AREA

Pollutant	Maximum Emission Rates (lb/hr) by Operating Load and Air Temperature							Averaging Time	Maximum Predicted Concentrations (ug/m3) by Operating Load and Air Temperature [a]						
	Base Load with Duct Burning				70% Load				Base Load with Duct Burning				70% Load		
	20°F	59°F	95°F	95°F PA	20°F	59°F	95°F		20°F	59°F	95°F	95°F PA	20°F	59°F	95°F
Generic [b] (10 g/s)	79.37	79.37	79.37	79.37	79.37	79.37	79.37	Annual	0.0184	0.0191	0.0198	0.0192	0.0205	0.0210	0.0215
								24-Hour	0.1824	0.1870	0.1928	0.1878	0.1978	0.2014	0.2065
								8-Hour	0.5080	0.5348	0.5621	0.5394	0.5858	0.6018	0.6171
								3-Hour	0.9147	0.9596	1.0054	0.9672	1.0450	1.0721	1.0985
								1-Hour	1.4043	1.4365	1.4704	1.4421	1.5163	1.5529	1.5894
SO_2	11.40	10.60	9.80	10.40	7.50	6.89	6.29	Annual	0.0026	0.0025	0.0024	0.0025	0.0019	0.0018	0.0017
								24-Hour	0.0262	0.0250	0.0238	0.0246	0.0187	0.0175	0.0164
								3-Hour	0.1314	0.1282	0.1241	0.1267	0.0987	0.0931	0.0870
PM_{10}	25.20	23.40	23.40	23.00	18.00	17.80	17.60	Annual	0.0058	0.0056	0.0058	0.0056	0.0047	0.0047	0.0048
								24-Hour	0.0579	0.0551	0.0568	0.0544	0.0449	0.0452	0.0458
NO_2	46.60	43.40	40.20	42.80	30.80	28.40	25.80	Annual	0.0108	0.0104	0.0100	0.0104	0.0080	0.0075	0.0070
CO	32.40	31.80	30.80	30.40	15.20	14.00	12.80	8-Hour	0.21	0.21	0.22	0.21	0.11	0.11	0.10
								1-Hour	0.57	0.58	0.57	0.55	0.29	0.27	0.26

[a] Concentrations are based on highest predicted concentrations from AERMOD using five years of meteorological data for 1990 to 1994 consisting of surface and upper air data from the National Weather Service stations at Savannah Municipal Airport and Charleston International Airport, respectively.

[b] Pollutant concentrations were based on a modeled or generic concentration predicted using a modeled emission rate of 79.37 lb/hr (10 g/s). Pollutant-specific concentrations were then estimated by multiplying the modeled concentration (at 10 g/s) by the ratio of the pollutant-specific emission rate to the modeled emission rate of 10 g/s.

TABLE 6-6
SUMMARY OF MAXIMUM CONCENTRATIONS PREDICTED FOR PROPOSED PROJECT COMPARED TO EPA CLASS I SIGNIFICANT IMPACT LEVELS

Pollutant	Averaging Time	Maximum Concentration ($\mu g/m^3$) [a, b]	EPA Class I Significant Impact Levels ($\mu g/m^3$)
Wolf Island NWA			
SO_2	Annual	0.003	0.1
	24-Hour	0.026	0.2
	3-Hour	0.133	1.0
PM_{10}	Annual	0.006	0.2
	24-Hour	0.061	0.3
NO_2 [c, d]	Annual [c]	0.008	0.1
Okefenokee NWA			
SO_2	Annual	0.001	0.1
	24-Hour	0.022	0.2
	3-Hour	0.070	1.0
PM_{10}	Annual	0.002	0.2
	24-Hour	0.030	0.3
NO_2	Annual	0.004	0.1

[a] Concentrations at the Wolf Island NWA are based on highest predicted concentrations from AERMOD using five years of meteorological data for 1990 to 1994 consisting of surface and upper air data from the National Weather Service stations at Savannah and Charleston International Airports, respectively. Concentrations at the Okefenokee NWA are based on highest predicted concentrations from CALPUFF using three years of meteorological data for 2001 to 2003.

[b] Based on two combustion turbines (CTs), one fuel gas heater (FGH) and the cooling tower. CTs on baseload 20 °F with duct burning for all pollutants unless otherwise noted.

[c] Based on steady-state operation only. Annual concentration for NO_2 based on CTs firing at baseload, 59 °F, with duct firing for 4000 hours and without duct firing for 4760 hours.

[d] NO_x to NO_2 conversion factor of 0.75 applied to modeled NO_x impacts based on EPA Modeling Guidelines

TABLE 6-7
SUMMARY OF MAXIMUM TOXIC AIR POLLUTANT CONCENTRATIONS PREDICTED FOR TWO CTS COMPARED TO THE GEORGIA EPD'S ACCEPTABLE AMBIENT CONCENTRATION (AAC) LEVELS

Pollutant	Emissions Rate [f] (lb/hr)	Averaging Time [d]	Maximum Concentrations Modeled [a] ($\mu g/m^3$)	Maximum Concentrations Predicted [b] ($\mu g/m^3$)	Georgia Acceptable Ambient Concentration (AAC)[c] ($\mu g/m^3$)	Maximum Ratio Predicted to AAC
1,3-Butadiene	1.9E-03	Annual	0.4346	0.0000103	0.04	0.00026
Acetaldehyde	1.8E-01	15-minute	17.7623	0.0518	4,500	0.000012
Acrolein	2.8E-02	Annual	0.4346	0.00015	0.02	0.0077
		15-minute	17.7623	0.00829	23	0.00036
Ammonia	30.2	Annual	0.4346	0.1654	2,400	0.00007
Benzene	5.4E-02	Annual	0.4346	0.00030	0.12	0.0025
		15-minute	17.7623	0.01599	1,600	0.0000100
Ethylbenzene	1.4E-01	Annual	0.4346	0.00077	1,000	0.00000077
		15-minute	17.7623	0.04146	54,300	0.00000076
Formaldehyde	1.0E+00	Annual	0.4346	0.0055	0.77	0.0071
		15-minute	17.7623	0.2952	245	0.0012
Naphthalene [e]	6.1E-03	Annual	0.4346	0.000034	3	0.0000112
		15-minute	17.7623	0.00181	7,900	0.00000023
Sulfuric acid mist	1.21	24-hour	5.6649	0.0864	2.4	0.035984
		15-minute	17.7623	0.3574	300	0.001191
Toluene	5.7E-01	Annual	0.4346	0.00314	400	0.0000078
		15-minute	17.7623	0.1691	113,000	0.0000015
Xylene	2.8E-01	24-hour	5.6649	0.0200	1,036	0.000019
		15-minute	17.7623	0.0829	65,100	0.0000013

[a] Concentrations are based on highest predicted concentrations from AERMOD using five years of meteorological data for 1990 to 1994 consisting of surface and upper air data from the National Weather Service stations at Savannah Municipal Airport and Charleston International Airport, respectively. Concentration are predicted using a generic modeled emission rate of 79.37 lb/hr (10 g/s).

[b] Pollutant-specific concentrations were then estimated by multiplying the modeled concentration (at 10 g/s) by the ratio of the pollutant-specific emission rate to the modeled emission rate of 10 g/s.

[c] Based on Georgia EPD's *Guideline for Ambient Impact Assessment of Toxic Air Pollutant Emissions* , Revised June 21, 1998 and AAC levels, February 8, 1999.

[d] Concentrations for 15-minute averaging times were obtained by multiplying the 1-hour average concentrations by a factor of 1.32 based on methods presented in the Georgia EPD's guideline document.

[e] Also used as default for unclassified PAHs.

[f] Worst-case hourly emisison rates based on 2 CTs operating at baseload at 20 °F and each duct-burner firing rate of 359 MMBtu/hr. See Table A-5b in Appendix A.

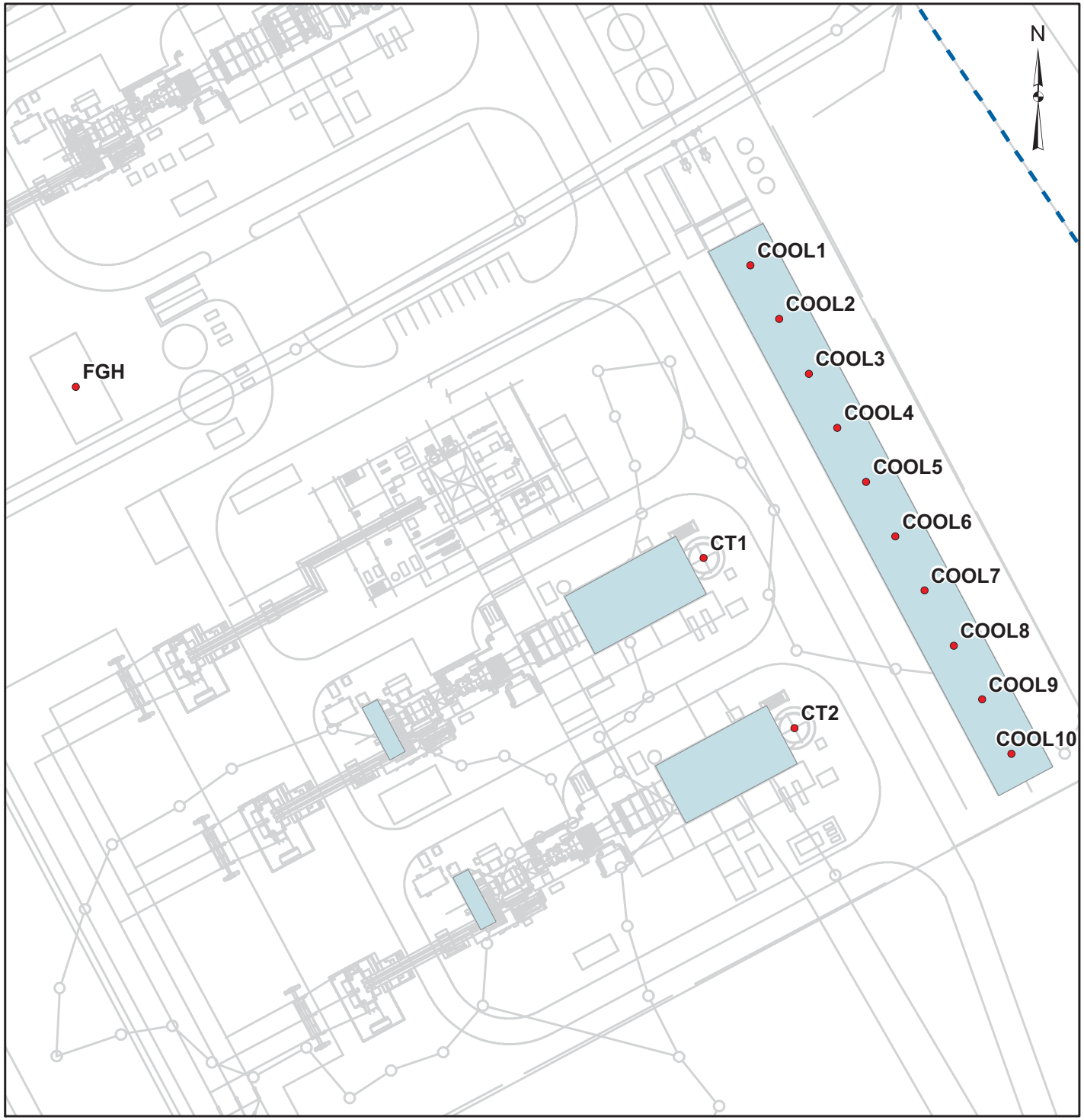

SITE BOUNDARY

LEGEND

- Source Locations
- Fence Line (Approximate Location)
- Buildings Used in Downwash

REFERENCE

Golder, 2008.
Projection: Transverse Mercator Datum: NAD 83 Coordinate System: UTM Zone 17

0 12.5 25 50 Meters

PROJECT

LIVE OAKS COMPANY, LLC

TITLE

Near Field Layout of Buildings, Stacks, and Site Boundary

Golder Associates
Gainesville, Florida

PROJECT No. 073-3618			SCALE AS SHOWN	REV. 1
DESIGN	SKM	11/05/08	FILE No. 0733618B005	
GIS	NRL	11/05/08	**FIGURE 6-1**	
CHECK	SKM	11/05/08		
REVIEW	SKM	11/17/08		

Map Document: P:\GIS\PROJECTS\2007\073-3618_Live_Oaks\B_PSD\MapDocuments\0733618B005_Rev1_Nearfield.mxd / Modified 11/17/2008 3:31:33 PM / Plotted 11/17/2008 3:31:33 PM by rlamar

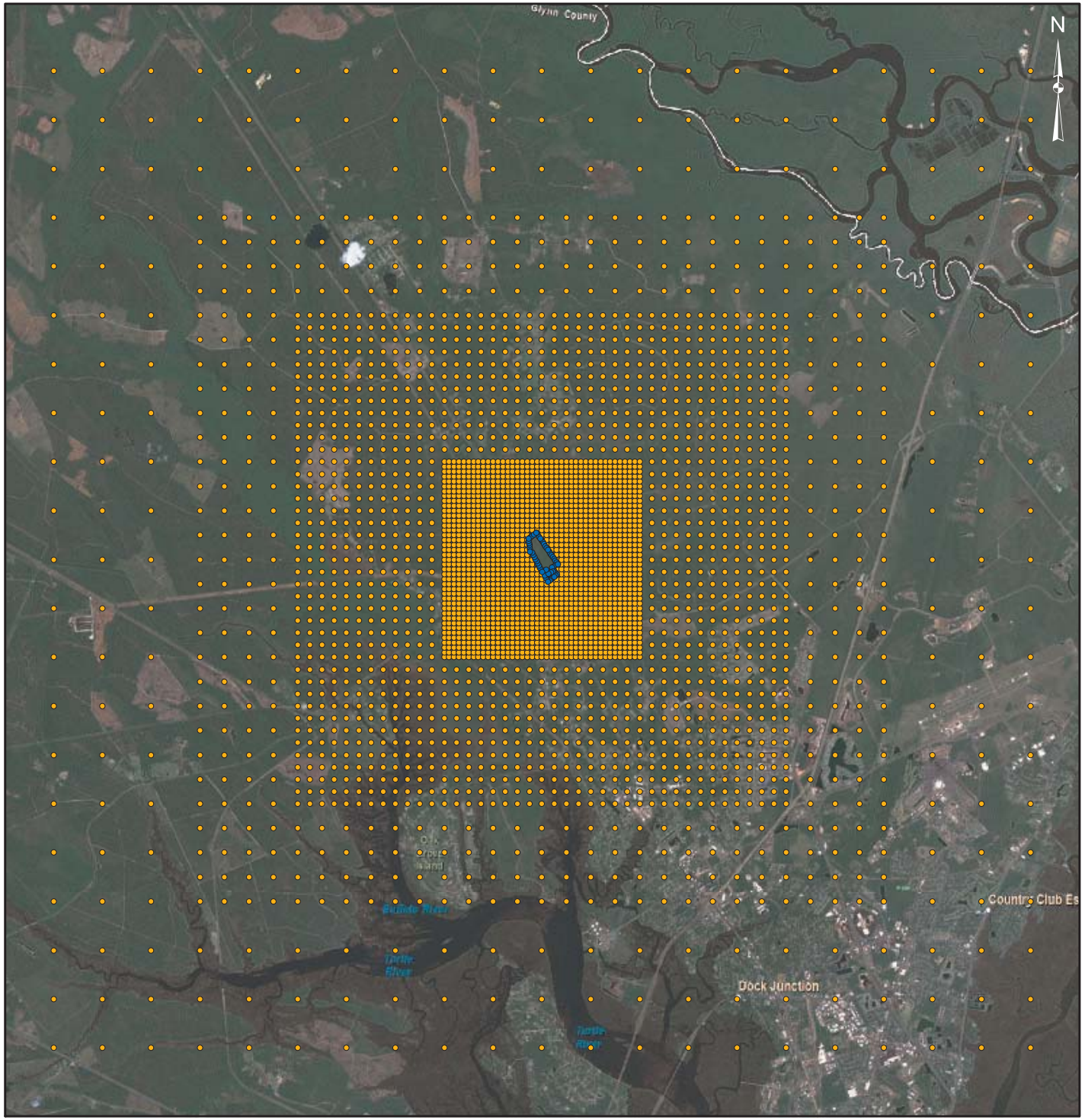

LEGEND

- Boundary Receptors
- Receptor Grid

REFERENCE

Golder, 2008.
Projection: Transverse Mercator Datum: NAD 83 Coordinate System: UTM Zone 17

0 1,000 2,000 4,000 Meters

PROJECT

LIVE OAKS COMPANY, LLC

TITLE

Far Field, Receptor Grid

Golder Associates
Gainesville, Florida

PROJECT No. 073-3618			SCALE AS SHOWN	REV. 1
DESIGN	SKM	11/05/08	FILE No. 0733618B006	
GIS	NRL	11/05/08	**FIGURE 6-2**	
CHECK	SKM	11/05/08		
REVIEW	SKM	11/17/08		

Map Document: P:\GIS\PROJECTS\2007\073-3618_Live_Oaks\B_PSD\MapDocuments\0733618B006_Rev1_Farfield.mxd / Modified 11/17/2008 3:32:50 PM / Plotted 11/17/2008 3:32:50 PM by rlamar

7.0 ADDITIONAL IMPACT ANALYSIS

7.1 Impacts due to Direct Growth

The Project is being constructed to meet current and projected electric demands. Additional growth as a direct result of the additional electric power provided by the Project is not expected.

Construction of the Project will occur over a 24-month period requiring an average of approximately 200 workers during that time. It is anticipated that many of these construction personnel will commute to the site.

The Project will employ a total of 25 operational workers at Project build-out. The operational workforce will also include annual contracted maintenance workers to be hired for periodic routine services. The workforce needed to operate the proposed Project represents a small fraction of the population already present in the immediate area. Therefore, while there would be a small increase in vehicular traffic in the area, the effect on air quality levels would be minimal.

There are also no anticipated air quality impacts due to associated industrial/commercial growth given the Project's location in the Sterling Industrial Park. The existing commercial infrastructure should be adequate to provide any support services that the Project might require.

7.2 Impact on Soils, Vegetation, Wildlife, and Visibility in the Project's Vicinity

The maximum air quality impacts for the Project predicted in the vicinity of the site were used to assess the Project's potential impacts on nearby soils, vegetation, wildlife, and visibility. As a conservative approach, the Project's maximum concentrations were compared to the lowest observed effect levels reported for the specific environmental concerns. In conducting the assessment, several assumptions were made regarding the pollutant interaction with the vegetation, soils, wildlife, and aquatic environment.

A screening approach was used to evaluate potential effects by comparison of the maximum predicted ambient concentrations of air pollutants of concern with effect threshold limits for both vegetation and wildlife as reported in the scientific literature. A literature search was conducted, which specifically addressed the effects of air pollutants on plant species reported to occur in the vicinity of

the plant and the Class I areas. It should be recognized that effects threshold information is not available for all species found in the Project's vicinity. However, studies have been performed on a few of the common species and on other similar species that can be used as indicators of environmental effects.

Because the Project's impacts on the local air quality are predicted to be less than the significant impact levels for PSD Class II areas, the Project's impacts on soils, vegetation, and wildlife in the Project's vicinity are also not expected to be significant. According to the modeling results presented in Section 6.0, the maximum air quality impacts due to the Project are predicted to be below the PSD Class II significant impact levels, PSD Class II Increments, and AAQS. In addition, no visibility impairment in the Project's vicinity is expected due to the types and quantities of emissions proposed for the Project. The opacity of the proposed HRSG exhaust emissions will be 10-percent or less.

Soils in the vicinity of the Live Oaks site consist of three soil series as identified in the U.S. Department of Agriculture (USDA) Soil Survey of Camden and Glynn Counties (1980), Pelham loamy sand, Brookman clay loam, and Olustee sand.

Pelham loamy sand is a deep, poorly drained, and moderately permeable soil. It is nearly level and occurs on broad flats and in shallow depressions and drainage ways of the Atlantic Coast Flatwoods. The water table is commonly 6 to 18 inches below the surface during winter and early spring. Pelham loamy sand is strongly or very strongly acidic throughout the soil profile.

Brookman clay loam is a deep, very poorly drained, slowly permeable soil formed in thick clayey marine sediment. This nearly level soil occurs in broad, shallow depressions of the Pamlico Shoreline Complex. The water table is less than 12 inches below the surface from fall until late spring. Brookman clay loam is strongly to slightly acid in the upper horizons and strongly acid to mildly alkaline in the lower horizon.

Olustee sand is a deep, poorly drained soil that is moderately permeable except for the rapidly permeable 0- to 5-inch surface horizon and the A'2 horizon, found between approximately 19 and 35 inches below the surface. This soil, formed in sandy and loamy marine sediment, is nearly level, and occurs on broad terraces of the Atlantic Coast Flatwoods. The water table is within 12 inches of the surface during the summer. Olustee sand is very strongly acid or strongly acid throughout the soil profile.

The predominant vegetative communities at the Project site include mixed upland forests, mixed wetland forests, and ditches. The mixed upland forest covers a majority of the property with a canopy comprised of live oak, laurel oak, red maple, sweetgum, slash pine, and loblolly pine. The mixed forested wetlands appear to have been timbered within the last 30 years and support a canopy of sweet gum, red maple, black gum, bald cypress, swamp laurel oak, slash pine, and water oak. Vegetative communities occurring adjacent to the Project site and in its vicinity were observed to be similar in composition to those observed onsite. Adjacent to the western property boundary of the site there exists a 200-ft-wide electrical transmission line easement, which is periodically mowed and contains two distinct vegetative communities, herbaceous wetlands and shrubby uplands. No threatened, endangered, or sensitive plant species were observed within any of the vegetative communities on the site or in the vicinity.

Maximum concentrations of criteria pollutants predicted in the vicinity of the Project site are below the EPA Class II significant impact levels (see Table 6-4); therefore, no significant impacts associated with facility operations are expected. The predicted concentrations are less than 1-percent of the AAQS. Since the AAQS are designed to protect the public welfare, including effects on soils and vegetation, no detrimental effects on soils or vegetation should occur in this area.

Although air pollution impacts to wildlife have been reported in the literature, many of the incidents involved acute exposures to pollutants, usually caused by unusual or highly concentrated releases or unique weather conditions. Generally, there are three ways pollutants may affect wildlife: through inhalation, through exposure with skin, and through ingestion.[32] Ingestion is the most common means and can occur through eating or drinking of high concentrations of pollutants. Bioaccumulation is the process of animals collecting and accumulating pollutant levels in their bodies over time. Other animals that prey on these animals would then be ingesting concentrated pollutants levels.

It is unlikely that the Project's emissions will cause injury or death to wildlife based on a review of the limited literature on air pollutant effects on wildlife. The Project's impacts are predicted to be very low and dispersed over a large area. Coupled with the mobility of wildlife, the potential for exposure of wildlife to the Project's impacts under weather conditions that lead to high concentrations is extremely unlikely.

[32] Newman, J.R. 1980. Effects of Air Emissions on Wildlife Resources. FWS/OBS-80/40.1. Biological Sevices Program, U.S. Fish and Wildlife Service. Washington, D.C.

Visibility impairment in the Project's vicinity is not expected due to the types and quantities of emissions proposed for the Project. The opacity of the proposed HRSG exhaust emissions will be 10-percent or less.

Visibility impairment due to the cooling tower is expected to be minimal. The plume from the cooling tower is expected to be visible within about 300 ft of the cooling tower for a majority of the time. For certain directions, the plume may be visible out to 1,000 ft on an infrequent basis. Because of the limited distance that the cooling tower plume would be visible, the plume is not expected to affect visibility on local roadways or airports. Due to the expected low frequency of occurrence of the visible plume, the effect on local meteorology is also expected to be insignificant. Localized, temporary, ground-level fogging may also occur infrequently during plume downwash conditions. This locally induced fog would dissipate rapidly due to the high winds associated with plume downwash conditions.

7.3 Impacts upon PSD Class I Areas

7.3.1 Identification of AQRVs and Methodology

The Project is located about 23 and 64 km from the PSD Class I areas of the Wolf Island and Okefenokee NWAs, respectively. Other PSD Class I areas are located more than 200 km from the Project. Based on discussions with the Georgia EPD, an air quality-related values (AQRV) analysis is required for this Project. Because the proposed Project will be fired with natural gas, a clean fuel, it is expected that the Project's impacts for SO_2, NO_2, and PM_{10} will be minimal and not significantly affect or impair visibility or soils and vegetation at the Class I areas.

An AQRV analysis was conducted to assess the potential risk to AQRVs at the Wolf Island and Okefenokee NWAs due to the proposed emissions from the proposed Project. The U.S. Department of the Interior in 1978 administratively defined AQRVs to be:

> All those values possessed by an area except those that are not affected by changes in air quality and include all those assets of an area whose vitality, significance, or integrity is dependent in some way upon the air environment. These values include visibility and those scenic, cultural, biological, and recreational resources of an area that are affected by air quality.

> Important attributes of an area are those values or assets that make an area significant as a national monument, preserve, or primitive area. They are the assets that are to be preserved if the area is to achieve the purposes for which it was set aside.[33]

Except for visibility, AQRVs were not specifically defined. However, odor, soil, flora, fauna, cultural resources, geological features, water, and climate generally have been identified by land managers as AQRVs. Since specific AQRVs have not been identified for the Wolf Island NWA and Okefenokee NWA, this AQRV analysis evaluates the effects of air quality on general vegetation types and wildlife found in the Wolf Island and Okefenokee NWAs.

Vegetation type AQRVs and their representative species types have been defined by the U.S. Fish and Wildlife as:

- Marshlands - black needlerush, saw grass, salt grass, and salt marsh cordgrass;
- Marsh Islands - cabbage palm and eastern red cedar;
- Estuarine Habitat - black needlerush, salt marsh cordgrass, and wax myrtle;
- Hardwood Swamp - red maple, red bay, sweet bay, and cabbage palm;
- Upland Forests - live oak, scrub oak, longleaf pine, slash pine, wax myrtle, and saw palmetto; and
- Mangrove Swamp - red, white, and black mangrove.

Wildlife AQRVs have been identified as endangered species, waterfowl, marsh and waterbirds, shorebirds, reptiles, and mammals.

The maximum predicted pollutant concentrations due to the proposed Project at the Wolf Island and Okefenokee PSD Class I areas are presented in Table 7-1. These results are based on using the AERMOD model for the Wolf Island NWA and the CALPUFF model for the Okefenokee NWA.

Similar to the evaluation performed in Section 7.2, a screening approach was used that compared the maximum ambient concentration of air pollutants of concern due to the Project's emissions at the PSD Class I areas of the NWAs with effect threshold limits for both vegetation and wildlife as reported in the scientific literature. A literature search was conducted that specifically addressed the effects of air contaminants on plant species reported to occur in the NWA. While the literature search

[33] Federal Register, 1978.

focused on such species as cabbage palm, eastern red cedar, lichens, and species of the hardwood swamplands and mangrove forest, no specific citations that addressed these species were found. It is recognized that effect threshold information is not available for all species found in the Wolf Island and Okefenokee NWAs, although studies have been performed on a few of the common species and on other similar species that can be used as indicators of effects.

7.3.2 Impacts to Soils

For soils, the potential and hypothesized effects of atmospheric deposition include:

- Increased soil acidification;
- Alteration in cation exchange;
- Loss of base cations; and
- Mobilization of trace metals.

The potential sensitivity of specific soils to atmospheric inputs is related to two factors. First, the physical ability of a soil to conduct water vertically through the soil profile is important in influencing the interaction with deposition. Second, the ability of the soil to resist chemical changes, as measured in terms of pH and soil cation exchange capacity (CEC), is important in determining how a soil responds to atmospheric inputs.

The majority of the soil complexes found in the Wolf Island NWA are inundated by tidal waters, contain a relatively high organic matter content, and have high buffering capacities based on their CEC, base saturation, and bulk density. The regular flooding of these soils regulates the pH and any change in acidity in the soil would be buffered by this activity. Therefore, they would be relatively insensitive to atmospheric inputs. However, the freshwater mucks present in the Okefenokee NWA may be more sensitive to atmospheric sulfur deposition. Although not tidally influenced, these freshwater mucks are highly organic and, therefore, have a relatively high intrinsic buffering capacity.

The relatively low sensitivity of the soils to atmospheric inputs coupled with the extremely low ground-level concentrations of contaminants projected for the Wolf Island and Okefenokee NWAs from the proposed Project's emissions precludes any significant impact on soils.

7.3.3 Impacts to Vegetation

In general, the effects of air pollutants on vegetation occur primarily from SO_2, NO_2, O_3, and PM. Effects from minor air contaminants, such as fluoride, chlorine, hydrogen chloride, ethylene, NH_3, hydrogen sulfide, CO, and pesticides, have also been reported in the literature. The effects of air pollutants are dependent both on the concentration of the contaminant and the duration of the exposure. The term "injury," as opposed to damage, is commonly used to describe all plant responses to air contaminants and will be used in the context of this analysis. Air contaminants are thought to interact primarily with plant foliage, which is considered to be the major pathway of exposure. For purposes of this analysis, it was assumed that 100-percent of each air contaminant of concern is accessible to the plants.

Injury to vegetation from exposure to various levels or air contaminants can be termed acute, physiological, or chronic. Acute injury occurs as a result of a short-term exposure to a high contaminant concentration and is typically manifested by visible injury symptoms ranging from chlorosis (discoloration) to necrosis (dead areas). Physiological or latent injury occurs as the result of a long-term exposure to contaminant concentrations below that which results in acute injury symptoms. Chronic injury results from repeated exposure to low concentrations over extended periods of time, often without any visible symptoms, but with some effect on the overall growth and productivity of the plant. In this assessment, 100-percent of the particular air pollutant in the ambient air was assumed to interact with the vegetation, which is a very conservative approach.

The concentrations of the pollutants, duration of exposure, and frequency of exposures influence the response of vegetation to atmospheric pollutants. The pattern of pollutant exposure expected from the facility is that of a few episodes of relatively high ground-level concentration, which occur during certain meteorological conditions interspersed with long periods of extremely low ground-level concentrations. If there are any effects of stack emissions on plants, they will be from the short-term, higher doses. A dose is the product of the concentration of the pollutant and duration of the exposure.

SO_2

Sulfur is an essential plant nutrient usually taken up as sulfate ions by the roots from the soil solution. When sulfur dioxide in the atmosphere enters the foliage through pores in the leaves, it reacts with water in the leaf interior to form sulfite ions. Sulfite ions are highly toxic. They interact with

enzymes, compete with normal metabolites, and interfere with a variety of cellular functions.[34] However, within the leaf, sulfite is oxidized to sulfate ions, which can then be used by the plant as a nutrient. Small amounts of sulfite may be oxidized before they prove harmful.

SO_2 gas at elevated levels has long been known to cause injury to plants. Acute SO_2 injury usually develops within a few hours or days of exposure, and symptoms include marginal, flecked, and/or intercoastal necrotic areas that appear water-soaked and dullish green initially. This injury generally occurs to younger leaves. Chronic injury usually is evident by signs of chlorosis, bronzing, premature senescence, reduced growth, and possible tissue necrosis.[35] Observed SO_2 effect levels for several plant species and plant sensitivity groupings are presented in Tables 7-2 and 7-3, respectively.

Many studies have been conducted to determine the effects of high-concentration, short-term SO_2 exposure on natural community vegetation. Sensitive plants include ragweed, legumes, blackberry, southern pine, and red and black oak. These species are injured by exposure to 3-hour average SO_2 concentrations of 790 to 1,570 $\mu g/m^3$. Intermediate plants include locust and sweetgum. These species are injured by exposure to 3-hour average SO_2 concentrations of 1,570 to 2,100 $\mu g/m^3$. Resistant species (injured at concentrations above 2,100 $\mu g/m^3$ for 3 hours) include white oak and dogwood.[36]

A study of native Floridian species[37] demonstrated that cypress, slash pine, live oak, and mangrove exposed to SO_2 concentrations of 1,300 $\mu g/m^3$ for 8 hours were not visibly damaged. This finding support the levels cited by other researchers on the effects of SO_2 on vegetation. A corroborative study[38] demonstrated that approximately 20-percent of a cross-section of plants ranging from sensitive to tolerant was visibly injured at 3-hour average SO_2 concentrations of 920 $\mu g/m^3$.

---

[34] Horsman, D.C. and Wellburn, A.R. 1976. Appendix II, Guide to Metabolic and Biochemical Effects of Air Pollutants in Higher Plants. Editor T.A. Mansfield. Cambridge University Press, Cambridge, England.
[35] EPA, 1982. Air Quality Criteria for Particulate Matter and Sulfur Oxides. Vol. 3.
[36] EPA, 1982. Air Quality Criteria for Particulate Matter and Sulfur Oxides. Vol. 3.
[37] Woltz, S.S. and T.K. Howe, 1981. Effects of Coal Burning Emissions on Florida Agriculture. In: The Impact of Increased Coal Use in Florida. Interdisciplinary Center for Aeronomy and (other) Atmospheric Sciences. University of Florida, Gainesville, Florida.
[38] McLaughlin, S.B. and N.T. Lee. 1974. Botanical Studies in the Vicinity of the Widows Creek Steam Plant. Review of Air Pollution Effects Studies, 1952-1972, and Results of 1973 Surveys. Internal Report I-EB-74-1, TVA.

Jack pine seedlings exposed to SO_2 concentrations of 470 to 520 μg/m^3 for 24 hours demonstrated inhibition of foliar lipid synthesis; however, this inhibition was reversible.[39] Black oak exposed to 1,310 μg/m^3 SO_2 for 24 hours a day for 1 week demonstrated a 48-percent reduction in photosynthesis.[40]

Two lichen species exhibited signs of SO_2 damage in the form of decreased biomass gain and photosynthetic rate as well as membrane leakage when exposed to concentrations of 200 to 400 μg/m^3 for 6 hours/week for 10 weeks.[41]

The maximum 24-hour average SO_2 concentrations for the Project at the Class I areas are 0.026 μg/m^3 or less. The maximum 24-hour average SO_2 concentrations predicted for the Project at the Class I areas are about 0.01-percent of those that caused damage to the most sensitive lichens. The modeled annual incremental increase in SO_2 adds slightly to background levels of this gas and poses only a minimal threat to area vegetation.

PM_{10}

Although information pertaining to the effects of particulate matter on plants is scarce, some research results are available. In a study conducted by Mandoli and Dubey (1988), 10 species of native Indian plants were exposed to levels of particulate matter that ranged from 210 to 366 μg/m^3 for an 8-hour averaging period. Damage in the form of a higher leaf area/dry weight ratio was observed at varying degrees for most plants tested. Concentrations of particulate matter lower than 163 μg/m^3 did not appear to be injurious to the tested plants.

The maximum predicted PM_{10} concentrations due to the Project in the Class I areas are predicted to be 0.172 μg/m^3 for the 8-hour averaging period and 0.061 μg/m^3 for the 24-hour averaging times (see Table 7-1). The maximum total 8-hour average concentrations are predicted to be less than 0.1-percent of the lower threshold value that reportedly affects plant foliage. As a result, no effects to vegetative AQRVs are expected from the Project's emissions.

---

[39] Malhotra, S.S. and A.A. Kahn. 1978. Effect of Sulfur Dioxide Fumigation on Lipid Biosynthesis in Pine Needles. Phytochemistry 17:241-244.

[40] Carlson, R.W. 1979. Reduction in the Photosynthetic Rate of *Acer quercus* and *Fraxinus* Species Caused by Sulfur Dioxide and Ozone. Environ. Pollut. 18:159-170.

[41] Hart, R., P.G. Webb, R.H. Biggs, and K.M. Portier. 1988. The Use of Lichen Fumigation Studies to Evaluate the Effects of New Emission Sources on Class I Areas. J. Air Poll. Cont. Assoc. 38:144-147.

NO_2

NO_2 can injure plant tissue with symptoms usually appearing as irregular white to brown collapsed lesions between the leaf veins and near the margins. Conversely, non-injurious levels of NO_2 can be absorbed by plants, enzymatically transformed into NH_3, and incorporated into plant constituents such as amino acids.[42]

Plant damage can occur through either acute (short-term, high concentration) or chronic (long-term, relatively low concentration) exposure. For plants that have been determined to be more sensitive to NO_2 exposure than others, acute (1, 4, and 8 hours) exposure caused 5-percent predicted foliar injury at concentrations ranging from 3,800 to 15,000 $\mu g/m^3$.[43] Chronic exposure of selected plants (some considered NO_2-sensitive) to NO_2 concentrations of 2,000 to 4,000 $\mu g/m^3$ for 213 to 1,900 hours caused reductions in yield of up to 37-percent and some chlorosis.[44]

The maximum 8-hour average NO_2 concentrations for the Project are predicted to be 0.242 $\mu g/m^3$ or less in the Class I areas. These concentrations are predicted to be less 0.01-percent of the levels that cause foliar injury in acute exposure scenarios. By comparison of published toxicity values for NO_2 exposure to long-term (annual averaging time) modeled concentrations, the possibility of plant damage in the Class I areas can be examined for chronic exposure situations. For a chronic exposure, the maximum annual average NO_2 concentrations due to the Project in the Class I areas are predicted to be 0.008 $\mu g/m^3$ or less. These values are less than 0.01-of the levels that caused minimal yield loss and chlorosis in plant tissue.

Although, it has been shown that simultaneous exposure to SO_2 and NO_2 results in synergistic plant injury,[45] the magnitude of this response is generally only 3 to 4 times greater than either gas alone and usually occurs at unnaturally high levels of each gas. Therefore, the concentrations within the wilderness areas are still far below the levels that potentially cause plant injury for either acute or chronic exposure.

---

[42] Matsumaru, T., T. Yoneyama, T. Totsuka, and K. Shiratori. 1979. Absorption of Atmospheric NO_2 by Plants and Soils. Soil Sci. Plant Nutr. 25:255-265.
[43] Heck, W.W. and D.T. Tingey. 1979. Nitrogen Dioxide: Time-Concentration Model to Predict Acute Foliar Injury. EPA-600/3-79-057, U.S. Environmental Protection Agency, Corvallis, OR.
[44] Zahn, R. 1975. Gassing Experiments with NO2 in Small Greenhouses. Staub Reinhalt. Luft 35:194-196.
[45] Ashenden, T.W. and I.A.D. Williams. 1980. Growth Reductions on *Lolium multiflorum* Lam. and *Phleum pratense* L. as a Result of SO_2 and NO_2 pollution. Environ. Pollut. Ser. A. 21:131-139.

CO

As with PM, information pertaining to the effects of CO on plants is scarce. The main effect of high concentrations of CO is the inhibition of cytochrome *c* oxidase, the terminal oxidase in the mitochondrial electron transfer chain. Inhibition of cytochrome *c* oxidase depletes the supply of ATP, the principal donor of free energy required for cell functions. However, this inhibition only occurs at extremely high concentrations of CO. Pollok et al. (1989) reported that acute exposure to $CO:O_2$ ratio of 25 (equivalent to an ambient CO concentration of 6.85×10^6 μg/m^3) resulted in stomatal closure in the leaves of the sunflower (*Helianthus annuus*). Naik et al. (1992) reported cytochrome *c* oxidase inhibition in corn, sorghum, millet, and Guinea grass at $CO:O_2$ ratios of 2.5 (equivalent to an ambient CO concentration of 6.85×10^5 μg/m^3). These plants were considered the species most sensitive to CO-induced inhibition of cytochrome *c* oxidase.

The maximum 1-hour average concentrations due to the Project in the Class I areas are 0.67 μg/m^3 or less which are less than 0.0001-percent of the minimum value that caused inhibition in laboratory studies. The amount of damage sustained at this level, if any, for 1 hour would have negligible effects over an entire growing season. The maximum predicted annual concentration of 0.009 μg/m^3 reflects more realistic, yet conservative CO level for the Class I areas. This maximum concentration is predicted to be less than 0.001-percent of the value that caused cytochrome *c* oxidase inhibition.

Sulfuric Acid Mist

Acidic precipitation or acid rain is coupled to SO_2 emissions mainly formed during the burning of fossil fuels. This pollutant is oxidized in the atmosphere and dissolves in rain forming SAM, which falls as acidic precipitation.[46] Although concentration data are not available, SAM has been reported to yield necrotic spotting on the upper surfaces of leaves.[47]

No significant adverse effects on vegetation are expected from the Project's emissions because SO_2 concentrations, which lead directly to the formation of SAM concentrations, are predicted to be well below levels, which have been documented as negatively affecting vegetation. During the last decade, much attention has been focused on acid rain. Acidic deposition is an ecosystem-level problem that affects vegetation because of some alterations of soil conditions such as increased

[46] Ravera, O. 1989. Ecological Assessment of Environmental Degradation, Pollution, and Recovery. Commission of the European Communities.
[47] Middleton, J.T. et al. 1950. Smog in the South Coastal Area of California. California Agriculture 4:7-11.

leaching of essential base cations or elevated concentrations of aluminum in the soil water.[48] Although effects of acid rain in eastern North America have been well published and publicized, detrimental effects of acid rain on Georgia vegetation are lacking documentation.

Summary

In summary, the phytotoxic effects from the Project's emissions are minimal. It is important to note that the elements were conservatively modeled with the assumption that 100-percent was available for plant uptake. This is rarely the case in a natural ecosystem.

7.3.4 Impacts to Wildlife

The major air quality risk to wildlife in the United States is from continuous exposure to pollutants above the NAAQS. This occurs in non-attainment areas, e.g., Los Angeles Basin. Risks to wildlife also may occur for wildlife living in the vicinity of an emission source that experiences frequent upsets or episodic conditions resulting from malfunctioning equipment, unique meteorological conditions, or startup operations.[49] Under these conditions, chronic effects (e.g., particulate contamination) and acute effects (e.g., injury to health) have been observed.[50]

A wide range of physiological and ecological effects to fauna has been reported for gaseous and particulate pollutants.[51] The most severe of these effects have been observed at concentrations above the secondary ambient air quality standards. Physiological and behavioral effects have been observed in experimental animals at or below these standards. For impacts on wildlife, the lowest threshold values of SO_2, NO_2, and particulates that are reported to cause physiological changes are shown in Table 7-4. These values are up to orders of magnitude larger than maximum concentrations predicted for the Project for the Class I area. No effects on wildlife AQRVs from SO_2, NO_2, and particulates are expected. The proposed Project's contribution to cumulative impacts is expected to be negligible.

---

[48] Goldstein, R.A. et al. 1985. Plant Response to SO_2: An Ecosystem Perspective. In: Sulfur Dioxide and Vegetation, pp. 403-417. W.E. Winner et al., editors. University of Florida. Gainesville, Florida.

[49] Newman, J.R. and R.K. Schreiber. 1988. Air Pollution and Wildlife Toxicology. Environmental Toxicology and Chemistry. 7:381-390.

[50] Newman, J.R. 1981. Effects of Air Pollution on Animals at Concentrations at or Below Ambient Air Standards. Performed for Denver Air Quality Office, National Park Service, U.S. Department of the Interior. Denver, Colorado.

[51] Newman, 1981; Newman and Schreiber, 1988. See footnotes 49 and 50.

7.3.5 Impacts upon Visibility

General

The Clean Air Act Amendments of 1977 provide for implementation of guidelines to prevent visibility impairment in mandatory Class I areas. The guidelines are intended to protect the aesthetic quality of these pristine areas from reduction in visual range and atmospheric discoloration due to various pollutants. Sources of air pollution can cause visible plumes if emissions of PM_{10} and NO_x are sufficiently large. A plume will be visible if its constituents scatter or absorb sufficient light so that the plume is brighter or darker than its viewing background (e.g., the sky or a terrain feature, such as a mountain). PSD Class I areas, such as national parks and wilderness areas, are afforded special visibility protection designed to prevent plume visual impacts to observers within a Class I area.

Visibility is an AQRV for the Wolf Island and Okefenokee NWAs. Visibility can take the form of plume blight for nearby areas, or regional haze for long distances (e.g., distances beyond 50 km). Because the Wolf Island NWA lies within 50 km from the proposed Project, the change in visibility is analyzed as plume blight. Because the Okefenokee NWA lies more than 50 km from the Project, the change in visibility is analyzed as regional haze.

Currently there are several air quality modeling approaches recommended by the Interagency Workgroup on Air Quality Models (IWAQM) to perform these analyses. The IWAQM consists of EPA and FLM of Class I areas who are responsible for ensuring that AQRVs are not adversely impacted by new and existing sources. These recommendations have been summarized in two documents:

- *Interagency Workgroup on Air Quality Models (IWAQM), Phase 2 Summary Report and Recommendations for Modeling Long Range Transport Impacts*,[52] referred to as the IWAQM Phase 2 report.
- *Federal Land Managers' Air Quality Related Values Workgroup (FLAG), Phase I Report*, USFS, NPS, USFWS[53], referred to as the FLAG document.

The methods and assumptions recommended in these documents were used to assess visibility impairment due to the project.

[52] IWAQM Phase 2 Report, EPA-454/R-98-019, December 1998.
[53] FLAG Phase I Report, December, 2000.

Visibility Analysis at Wolf Island NWA

Methodology

The analysis to determine the potential adverse plume visibility effects in the Wolf Island NWA was based on recommendations in the FLAG document using the screening approach suggested in the Workbook for Plume Visual Impact Screening and Analysis.[54] EPA has computerized this approach in a program called the VISCREEN model. The VISCREEN model is currently recommended for use by the EPA to assess visual plume impacts in regulatory applications. The VISCREEN model can be used to calculate potential plume impact of specific pollutant emissions for specific transport and meteorological dispersion conditions. The model can be applied in two successive levels of screening (i.e., referred to as Levels 1 and 2) without the need for extensive source, meteorological, or pollutant input. If the screening calculations demonstrate that, during worst-case meteorological conditions a plume is imperceptible or, if perceptible, is not likely to be considered objectionable ("adverse" or "significant" in the language of the EPA PSD and visibility regulations), further analysis of plume visual impact would not be required as part of the air quality review of the source. However, if the screening analyses demonstrate that the criteria are exceeded, plume visual impacts cannot be ruled out, and more detailed analyses to ascertain the magnitude, frequency, location, and timing of plume visual impacts would be required.

The Level 1 screening analysis is designed to provide a conservative estimate of plume visual impacts (i.e., impacts that would be larger than those calculated with more realistic input and modeling assumptions). This analysis assumes worst-case meteorological conditions of stable stability (Pasquill-Gifford stability class F) and a 1 m/s wind speed persisting for 12 hours in one direction towards a PSD Class I area. The input required for the Level 1 analysis is limited to the following parameters:

- Emission rates of PM_{10} and NO_x;
- Distance between the emission source and (a) the observer; (b) the closest Class I area boundary; and (c) the most distant Class I area boundary;
- Background visual range appropriate for the region in which the Class I area is located; and
- If available, emission rates of NO_2, soot, and primary sulfate.

[54] Tutorial Package for the VISCREEN Model, EPA, 1992.

Visibility impacts are then determined for two parameters:

- Contrast of a plume against a viewing background such as the sky or a terrain feature, and
- Perceptibility of a plume on the basis of the color difference between the plume and the viewing background (Delta E).

Results are provided by the model for several scenarios based on the background view, the viewing angle, visibility improvement due to plumes located both inside and outside the Class I area, and the sun angle. The critical values for contrast and Delta E are 0.05 and 2.00, respectively. If these levels are not exceeded by the proposed source, the source can be considered to not have a significant impact on the Class I area.

Results of Level 1 Analysis

The input parameters and results of the Level 1 analysis for the proposed Project are presented in Figure 7-1. As shown, the project will emit PM_{10}, NO_x, and primary SO_4 (as SAM). The maximum short-term average emission rates used in the analysis, which are presented in Section 2.0 and Appendix A, are based on the CTs operating at baseload conditions with duct firing at an air inlet temperature of 20°F. Primary NO_2 and soot are not emitted in significant quantities by natural gas-fired combustion sources; therefore, these emissions were set to zero.

The terrain between the project site and PSD Class I area is considered to be flat. As such, the primary focus was to compare the proposed Project's impacts to criteria for Sky background conditions inside the Class I area. Based on information provided in the FLAG document, the background visual range (BVR) for natural conditions at the Wolf Island NWA was estimated from the light-extinction coefficient (b_{ext}) using the following formula:

$$\text{BVR (km)} = 3912 / b_{ext} \text{ [megameters}^{-1} \text{ (Mm}^{-1}\text{)]}$$

From the FLAG document, the annual b_{ext} for Wolf Island is 21.6 Mm^{-1}. As a result, the background visual range was assumed to be 181.1 km.

Other parameters input to the model were based upon default values given in the Workbook and incorporated into the computer model.

As shown in Figure 7- 1, the Project's emissions due to natural gas firing are calculated to exceed the Level 1 visibility screening criteria for a sky background inside the Class I area. As such a Level 2 screening analysis was performed. The only difference between the input of the Level 1 and Level 2 analyses are the meteorological conditions that are assumed to exist during plume transport and dispersion patterns.

Results of Level 2 Analysis

The Level 2 screening analysis is designed to account for more realistic occurrences of meteorological conditions that would transport the plumes of the proposed units towards the Class I area. In this analysis, an assessment of the frequency of the wind direction, wind speed, and atmospheric stability classes is made to determine the frequency of conditions that are most likely to cause a potentially adverse plume visual impact. If the Level 1 default parameters are selected for addressing visual plume impacts, the VISCREEN model assigns an appropriate estimate of particle size and density for the emitted and background atmosphere particulate and worst-case plume dispersion conditions. For this analysis, the particle size and density for the emission sources were not changed.

The first step in the analysis is to construct a table that shows worst-case dispersion conditions ranked in order of decreasing severity and the frequency of occurrence of these conditions associated with the wind direction that could transport emissions toward the Class I area. Dispersion conditions are ranked by evaluating the product of the horizontal dispersion parameter (called sigma y) times the vertical dispersion parameter (called sigma z) times the wind speed. Sigma y and sigma z account for the amount of plume spreading or dispersion that will occur as a plume travels away from a source for a given stability class. The dispersion conditions are then ranked in ascending order of the value of the dispersion product term (i.e., sigma y times sigma z times the wind speed).

For the Level 2 analysis, it is assumed that steady-state plume conditions are unlikely to persist for more than 12 hours. Thus, if a transit time of more than 12 hours is required to transport a plume parcel from the emission source to a Class I area for a given dispersion condition, it is assumed that the plume material is more dispersed than a standard Gaussian plume model would predict. This enhanced dilution would result from daytime convective mixing and wind direction and speed changes.

To obtain the worst-case meteorological conditions, it is necessary to determine the dispersion conditions (i.e., a given wind speed and stability class associated with the wind direction that would transport emissions toward the Class I area) that have a dispersion product term with a cumulative probability of 1-percent. Thus, the dispersion condition is selected to address potential plume visual impacts such that the sum of all frequencies of occurrence worse than this condition totals 1-percent (i.e., about 4 days per year). The 1-percentile meteorology is assumed to be worst-case plume visual impacts when the probability of worst-case meteorology conditions is coupled with the probability of other factors being ideal for maximizing plume visual impacts. Dispersion conditions associated with transport times of more than 12 hours are not considered in this cumulative frequency.

For this study, the surface meteorological data from the NWS station in Savannah from 1990 to 1994 were used to generate a frequency distribution of wind direction, wind speed, and stability occurrences based on the standardized stability array (STAR) program used for many air dispersion model applications. The STAR program generates frequencies using 16 wind direction classes with each class covering a 22.5-degree sector, 6 wind speed classes, and 6 stability classes. It should be noted that these data were used to address air quality impacts from the project as presented in Section 6.0.

The PSD Class I area of the Wolf Island NWA is located to the east-northeast and east of the project site at measured distances that vary from a minimum of 22.9 km to a maximum of 27.1 km. Therefore, the frequencies associated with winds that would blow from the project to the Class I area were included in the analysis (i.e., west-southwest and west) with the highest frequency from any of those directions used in the cumulative frequency to determine the worst-case meteorology.

The frequencies were classified into 6-hour periods: 1 a.m. to 7 a.m.; 8 a.m. to 1 p.m.; 1 p.m. to 7 p.m.; and 7 p.m. to 1 a.m. In effect, the criteria of 1-percent are applied to each 6-hour period, allowing only 1 day to exceed the criteria per period (instead of using the frequencies for an entire day summed over the year).

This analysis is presented in Table 7-5, which shows the dispersion product term, transport time to the nearest part of the Class I area (i.e., distance of 22.9 km), and the frequency associated with each wind direction sector. As indicated in Table 7-5, all of the meteorological conditions considered in the analysis could be transported to the Class I area in less than 12 hours. As a result, all conditions

were all included in determining the worst-case meteorology using the cumulative probability of 1-percent.

During the nighttime periods (7 p.m. to 7 a.m.), weather conditions for both wind directions produce a cumulative frequency of 1-percent under moderately stable stability and a wind speed of 2 m/s. The typical worst-case nighttime meteorological condition is only slightly less conservative than the Level 1 conditions of moderately stable stability and 1.0 m/s. Under daytime periods (7 a.m. to 7 p.m.), however, when the plume would be visible, the critical weather condition associated with a cumulative frequency of 1-percent is neutral stability and a wind speed of 3 m/s. Both the nighttime and daytime critical weather condition are presented in the Level 2 analysis assess the potential visual plume impacts due to the proposed Project.

The results of the visual plume impact analysis using a worst-case nighttime meteorological condition of moderately stable stability and 2 m/s wind speed are shown in Figure 7-2. The results using a worst case daytime meteorological condition of neutral stability and 3 m/s wind speed are shown in Figure 7-3. As shown, the Project's values of Delta E and contrast are less than the screening criteria of 2.00 and 0.05, respectively, for sky background conditions inside the Class I area. As a result, it is considered unlikely that the pollutant emissions from the project firing natural gas will cause adverse visibility impairment in the Wolf Island NWA.

Visibility Analysis at Okefenokee NWA

Methodology

Based on the FLAG document, current regional haze guidelines characterize a change in visibility by the change in the light-extinction coefficient (b_{ext}). The b_{ext} is the attenuation of light per unit distance due to the scattering and absorption by gases and particles in the atmosphere. A change in the extinction coefficient produces a perceived visual change. An index that simply quantifies the percent change in visibility due to the operation of a source is calculated as:

$$\Delta\% = (b_{exts} / b_{extb}) \times 100$$

where: b_{exts} is the extinction coefficient calculated for the source, and
b_{extb} is the background extinction coefficient.

The purpose of the visibility analysis is to calculate the extinction at each receptor for each day (24-hour period) of the year due to the proposed project. The visibility test looks for a change in extinction of 5-percent or greater for any day of the year.

Processing of visibility impairment for this study was performed with the CALPUFF model and the CALPUFF post-processing program CALPOST. The analysis was conducted in accordance with the most recent guidance from the FLAG report (December 2000). The CALPUFF postprocessor model CALPOST is used to calculate the combined visibility effects from the different pollutants that are emitted from the Project. Daily background extinction coefficients are calculated on an hour-by-hour basis using hourly relative humidity data from CALMET and hygroscopic and non-hygroscopic extinction components specified in the FLAG document (i.e., visibility method 2). For the Okefenokee NWA, the hygroscopic and non-dygroscopic components are 0.9 and 8.5 inverse megameter (Mm^{-1}). CALPOST then calculates the percent extinction change for each day of the year. The visibility impairment criteria is 5.0-percent. Recent correspondences with the U.S. Fish and Wildlife Service (USFWS), the FLM for the Okefenokee NWA, have indicated that visibility results using monthly relative humidity factors (i.e., visibility method 6) are also desired. Visibility method 6 is currently used for visibility impact analyses associated with Best Available Retrofit Technology (BART) regulations.

Results

The results of the visibility analysis at the Okefenokee NWA are presented in Table 7-6 and indicate that project's maximum change in visibility is predicted to be approximately 2-percent, which is below the FLM's recommended screening criteria of 5-percent change. As a result, it is expected that the Project would not have an adverse impact on the existing regional haze at the PSD Class I area of the Okefenokee NWA.

7.3.6 Sulfur and Nitrogen Deposition

General Methods

As part of the AQRV analyses, total nitrogen (N) and sulfur (S) deposition rates were predicted for the Project at the Wolf Island and Okefenokee NWAs. The deposition analysis criterion is based on the annual averaging period. The total deposition is estimated in units of kilogram per hectare per year (kg/ha/yr) of N or S. The CALPUFF model is used to predict wet and dry deposition fluxes of various oxides of these elements.

For N deposition, the species include:

- Particulate ammonium nitrate (from species NO_3), wet and dry deposition;
- Nitric acid (species HNO_3), wet and dry deposition;

- NO_x, dry deposition; and
- Ammonium sulfate (species SO_4), wet and dry deposition.

For S deposition, the species include:

- SO_2, wet and dry deposition; and
- SO_4, wet and dry deposition.

The CALPUFF model produces results in units of $\mu g/m^2/s$. The modeled deposition rates are then converted to N or S deposition in kg/ha respectively, by using a multiplier equal to the ratio of the molecular weights of the substances (IWAQM Phase II report, Section 3.3).

Deposition analysis thresholds (DAT) for total N and S deposition of 0.01 kg/ha/yr were provided by the USFWS (January 2002). A DAT is the additional amount of N or S deposition within a Class I area below which estimated impacts from a new or modified source are considered insignificant. The maximum N and S depositions predicted for the project are, therefore, compared to these DAT or significant impact levels.

Results

The maximum predicted total annual N and S depositions predicted for the project in the PSD Class I areas of the Wolf Island and Okefenokee NWAs are summarized in Table 7-7. The maximum annual N and S deposition rates for the project occur at the Wolf Island NWA and are predicted to be well below the N or S DAT of 0.01 kg/ha/yr.

TABLE 7-1
MAXIMUM POLLUTANT CONCENTRATIONS PREDICTED
AT THE PSD CLASS I AREAS FOR THE AQRV ANALYSIS

Pollutant	Averaging Time	Maximum Concentrations at Wolf Island NWA [a] ($\mu g/m^3$)	Maximum Concentrations at Okefenokee NWA [b] ($\mu g/m^3$)
SO_2	Annual	0.003	0.001
	24-Hour	0.026	0.022
	8-Hour	0.074	0.051
	3-Hour	0.133	0.070
	1-Hour	0.204	0.080
PM_{10}	Annual	0.006	0.002
	24-Hour	0.061	0.030
	8-Hour	0.172	0.078
	3-Hour	0.308	0.117
	1-Hour	0.472	0.167
NO_2 [d]	Annual [c]	0.008	0.003
	24-Hour	0.085	0.060
	8-Hour	0.242	0.149
	3-Hour	0.435	0.204
	1-Hour	0.695	0.227
CO	Annual	0.009	0.004
	24-Hour	0.081	0.070
	8-Hour	0.237	0.151
	3-Hour	0.423	0.227
	1-Hour	0.670	0.256
SAM	Annual	0.0006	0.0004
	24-Hour	0.006	0.006
	8-Hour	0.015	0.016
	3-Hour	0.028	0.027
	1-Hour	0.043	0.031

[a] Concentrations are based on highest predicted concentrations from AERMOD using five years of meteorological data for 1990 to 1994 consisting of surface and upper air data from the National Weather Service stations at Savannah and Charleston International Airports, respectively.

[b] Concentrations are based on highest predicted concentrations from CALPUFF using three years V.

[c] Based on steady-state operation only.Annual concentration for NO_2 based on CTs firing at baseload, 59 °F, with duct firing for 4000 hours and without duct firing for 4760 hours.

[d] NO_x to NO_2 conversion factor of 0.75 applied to modeled NO_x impacts based on EPA Modeling Guidelines.

TABLE 7-2
SO_2 EFFECTS LEVELS FOR VARIOUS PLANT SPECIES

Plant Species	Observed Effect Level ($\mu g/m^3$)	Exposure (Time)	Reference
Sensitive to tolerant	920 (20-percent displayed visible injury)	3 hours	McLaughlin and Lee, 1974
Lichens	200-400	6 hr/wk for 10 weeks	Hart et al., 1988
Cypress, slash pine, live oak, mangrove	1,300	8 hours	Woltz and Howe, 1981
Jack pine seedlings	470-520	24 hours	Malhotra and Kahn, 1978
Black oak	1,310	Continuously for 1 week	Carlson, 1979

TABLE 7-3
SENSITIVITY GROUPINGS OF VEGETATION BASED ON VISIBLE INJURY AT DIFFERENT SO_2 EXPOSURES[a]

Sensitivity Grouping	SO_2 Concentration		Plants
	1-Hour	3-Hour	
Sensitive	1,310 - 2,620 µg/m^3 (0.5 - 1.0 ppm)	790 - 1,570 µg/m^3 (0.3 - 0.6 ppm)	Ragweeds Legumes Blackberry Southern pines Red and black oaks White ash Sumacs
Intermediate	2,620 - 5,240 µg/m^3 (1.0 - 2.0 ppm)	1,570 - 2,100 µg/m^3 (0.6 - 0.8 ppm)	Maples Locust Sweetgum Cherry Elms Tuliptree Many crop and garden species
Resistant	>5,240 µg/m^3 (>2.0 ppm)	>2,100 µg/m^3 (>0.8 ppm)	White oaks Potato Upland cotton Corn Dogwood Peach

[a] Based on observations over a 20-year period of visible injury occurring on over 120 species growing in the vicinities of coal-fired power plants in the southeastern United States.

Source: EPA, 1982a.

TABLE 7-4
EXAMPLES OF REPORTED EFFECTS OF AIR POLLUTANTS AT CONCENTRATIONS BELOW NATIONAL SECONDARY AMBIENT AIR QUALITY STANDARDS

Pollutant	Reported Effect	Concentration ($\mu g/m^3$)	Exposure
Sulfur Dioxide[a]	Respiratory stress in guinea pigs	427 to 854	1 hour
	Respiratory stress in rats	267	7 hours/day; 5 day/week for 10 weeks
	Decreased abundance in deer mice	13 to 157	continually for 5 months
Nitrogen Dioxide[b,c]	Respiratory stress in mice	1,917	3 hours
	Respiratory stress in guinea pigs	96 to 958	8 hours/day for 122 days
Particulates[a]	Respiratory stress, reduced respiratory disease defenses	120 PbO_3	continually for 2 months
	Decreased respiratory disease defenses in rats, same with hamsters	100 $NiCl_2$	2 hours

Source: [a] Newman and Schreiber, 1988.
[b] Gardner and Graham, 1976.
[c] Trzeciak et al., 1977.

TABLE 7-5
PLUME VISUAL IMPACT ANALYSIS - SCREENING LEVEL 2 - IDENTIFICATION OF WORST-CASE METEOROLOGICAL CONDITIONS

Dispersion Conditions						Transport	Frequency of Occurrence (percent) of Dispersion Conditions [c] - Daytime				Frequency of Occurrence (percent) of Dispersion Conditions [c] - Nighttime			
Stability		Wind Speed	Dispersion Parameter		Sigma Y x Sigma Z x Wind Speed	Time to Class I Area	7 a.m. to 1 p.m.		1 p.m. to 7 p.m.		1 a.m. to 7 a.m.		7 p.m. to 1 a.m.	
Category	Name	(m/s)	Horizontal (sigma Y (m))	Vertical (sigma Z (m))	(m^3/s)	(hours) [a]	f [b]	cf [b]	f [b]	cf [b]	f [b]	cf [b]	f [b]	cf [b]
WSW Wind Direction Sector														
F	Moderately Stable	1	564.5	63.0	35,573	6.4	0.00	0.00	0.00	0.00	0.00	0.00	0.00	0.00
F	Moderately Stable	2	564.5	63.0	71,146	3.2	0.02	0.02	0.11	0.11	1.56	1.56	1.04	1.04
E	Slightly Stable	1	847.7	115.0	97,492	6.4	0.00	0.02	0.00	0.11	0.00	1.56	0.00	1.04
F	Moderately Stable	3	564.5	63.0	106,719	2.1	0.05	0.06	0.24	0.35	1.74	3.30	0.76	1.80
E	Slightly Stable	2	847.7	115.0	194,984	3.2	0.00	0.06	0.09	0.44	0.46	3.76	0.27	2.07
D	Neutral	1	1132.0	215.6	244,028	6.4	0.00	0.06	0.00	0.44	0.00	3.76	0.00	2.07
E	Slightly Stable	3	847.7	115.0	292,477	2.1	0.05	0.12	0.25	0.68	0.99	4.75	0.76	2.83
E	Slightly Stable	4	847.7	115.0	389,969	1.6	0.02	0.14	0.12	0.80	0.64	5.39	0.40	3.23
E	Slightly Stable	5	847.7	115.0	487,461	1.3	0.00	0.27	0.06	0.98	0.10	5.72	0.18	3.49
D	Neutral	2	1132.0	215.6	488,056	3.2	0.14	0.27	0.11	0.91	0.24	5.62	0.07	3.30
D	Neutral	3	1132.0	215.6	732,084	2.1	0.34	0.61	0.22	1.20	0.44	6.16	0.07	3.56
D	Neutral	4	1132.0	215.6	976,112	1.6	0.47	1.09	0.44	1.63	0.85	7.01	0.65	4.21
D	Neutral	5	1132.0	215.6	1,220,140	1.3	0.47	1.56	0.38	2.02	0.48	7.49	0.19	4.40
W Wind Direction Sector														
F	Moderately Stable	1	564.5	63.0	35,573	6.4	0.00	0.00	0.00	0.00	0.00	0.00	0.00	0.00
F	Moderately Stable	2	564.5	63.0	71,146	3.2	0.07	0.07	0.15	0.15	1.61	1.61	0.84	0.84
E	Slightly Stable	1	847.7	115.0	97,492	6.4	0.00	0.07	0.00	0.15	0.00	1.61	0.00	0.84
F	Moderately Stable	3	564.5	63.0	106,719	2.1	0.05	0.12	0.24	0.38	1.30	2.90	0.50	1.34
E	Slightly Stable	2	847.7	115.0	194,984	3.2	0.00	0.12	0.06	0.45	0.39	3.29	0.32	1.66
D	Neutral	1	1132.0	215.6	244,028	6.4	0.00	0.12	0.00	0.45	0.00	3.29	0.00	1.66
E	Slightly Stable	3	847.7	115.0	292,477	2.1	0.02	0.14	0.16	0.60	0.58	3.88	0.42	2.08
E	Slightly Stable	4	847.7	115.0	389,969	1.6	0.01	0.15	0.16	0.77	0.75	4.63	0.39	2.47
E	Slightly Stable	5	847.7	115.0	487,461	1.3	0.02	0.36	0.12	0.99	0.32	5.16	0.17	2.70
D	Neutral	2	1132.0	215.6	488,056	3.2	0.19	0.34	0.11	0.88	0.21	4.84	0.05	2.53
D	Neutral	3	1132.0	215.6	732,084	2.1	0.35	0.70	0.38	1.38	0.29	5.45	0.03	2.73
D	Neutral	4	1132.0	215.6	976,112	1.6	0.39	1.10	0.53	1.91	0.68	6.13	0.45	3.18
D	Neutral	5	1132.0	215.6	1,220,140	1.3	0.57	1.66	0.69	2.60	0.47	6.61	0.17	3.35

[a] Proposed project location is approximately 22.9 km from closest boundary of Class I area.
[b] f= frequency for given meteorological condition; cf= cumulative frequency up to and including condition.
[c] Based on surface meteorological data for 1990 to 1994 from the National Weather Service (NWS) station at the Savannah International Airport.

TABLE 7-6
MAXIMUM 24-HOUR VISIBILITY IMPAIRMENT PREDICTED FOR THE PROPOSED PROJECT AT THE OKEFENOKEE NWA PSD CLASS I AREA

Background Extinction Calculations	Visibility Impairment (%) [a] 2001	2002	2003	Visibility Impairment Criteria (%)
Method 2 with RHMAX = 95 Percent	1.58	1.92	2.00	5.0
Method 6 with monthly F(RH) factors	1.04	1.28	1.33	5.0

[a] Concentrations are highest predicted using CALPUFF V5.8 with CALMET V5.8 4-km Domains, 2001 to 2003. Background extinctions calculated using FLAG Document (December 2000) and stated method.

TABLE 7-7
MAXIMUM ANNUAL NITROGEN AND SULFUR DEPOSITION PREDICTED FOR THE PROPOSED PROJECT AT THE PSD CLASS I AREAS

Species	Total Deposition (Wet & Dry) ($g/m^2/s$)	Total Deposition (Wet & Dry) (kg/ha/yr)[a]	Year	Deposition Analysis Threshold [b] (kg/ha/yr)
Wolf Island NWA				
Nitrogen (N) Deposition	7.30E-12	0.0023	2001	0.01
	5.51E-12	0.0017	2002	0.01
	6.64E-12	0.0021	2003	0.01
Sulfur (S) Deposition	6.58E-12	0.0021	2001	0.01
	4.64E-12	0.0015	2002	0.01
	6.08E-12	0.0019	2003	0.01
Okefenokee NWA				
Nitrogen (N) Deposition	4.26E-12	0.0013	2001	0.01
	4.60E-12	0.0015	2002	0.01
	3.08E-12	0.0010	2003	0.01
Sulfur (S) Deposition	2.86E-12	0.0009	2001	0.01
	3.28E-12	0.0010	2002	0.01
	1.94E-12	0.0006	2003	0.01

[a] Conversion factor is used to convert $g/m^2/s$ to kg/hectare (ha)/yr with the following units:

$g/m^2/s$	x	0.001	kg/g
	x	10,000	m^2/hectare
	x	3,600	sec/hr
	x	8,760	hr/yr = kg/ha/yr
	or		
$g/m^2/s$	x	3.154E+08	= kg/ha/yr

[b] Deposition analysis thresholds (DAT) for nitrogen deposition provided by the U.S. Fish and Wildlife Service, January 2002. A DAT is the additional amount of N or S deposition within a Class I area, below which estimated impacts from a propsed new or modified source are considered insignificant.

Figure 7-1
Visual Effects Screening Analysis for
Source: SG LIVE OAKS
Class I Area: WOLF IS. NWA
LEVEL 1 ANALYSIS

*** Level-1 Screening ***

Input Emissions for

Particulates	26.11	LB /HR
NOx (as NO2)	48.96	LB /HR
Primary NO2	.00	LB /HR
Soot	.00	LB /HR
Primary SO4	2.42	LB /HR

**** Default Particle Characteristics Assumed

Transport Scenario Specifications:

Background Ozone:	.04 ppm
Background Visual Range:	181.10 km
Source-Observer Distance:	22.90 km
Min. Source-Class I Distance:	22.90 km
Max. Source-Class I Distance:	27.10 km
Plume-Source-Observer Angle:	11.25 degrees
Stability:	6
Wind Speed:	1.00 m/s

R E S U L T S

Asterisks (*) indicate plume impacts that exceed screening criteria

Maximum Visual Impacts INSIDE Class I Area
Screening Criteria ARE Exceeded

					Delta E		Contrast	
Backgrnd	Theta	Azi	Distance	Alpha	Crit	Plume	Crit	Plume
SKY	10.	125.	27.1	44.	2.00	2.952*	.05	.058*
SKY	140.	125.	27.1	44.	2.00	1.439	.05	-.034
TERRAIN	10.	84.	22.9	84.	2.00	9.845*	.05	.063*
TERRAIN	140.	84.	22.9	84.	2.00	.665	.05	.008

Maximum Visual Impacts OUTSIDE Class I Area
Screening Criteria ARE Exceeded

					Delta E		Contrast	
Backgrnd	Theta	Azi	Distance	Alpha	Crit	Plume	Crit	Plume
SKY	10.	1.	1.0	168.	2.00	24.654*	.05	.541*
SKY	140.	1.	1.0	168.	2.00	7.509*	.05	-.250*
TERRAIN	10.	1.	1.0	168.	2.00	38.671*	.05	.420*
TERRAIN	140.	1.	1.0	168.	2.00	9.729*	.05	.213*

Figure 7-2
Visual Effects Screening Analysis for
Source: SG LIVE OAKS
Class I Area: WOLF IS. NWA
LEVEL 2 ANALYSIS, NIGHTTIME HOURS ONLY

*** User-selected Screening Scenario Results ***

Input Emissions for

Particulates	26.11	LB /HR
NOx (as NO2)	48.96	LB /HR
Primary NO2	.00	LB /HR
Soot	.00	LB /HR
Primary SO4	2.42	LB /HR

**** Default Particle Characteristics Assumed

Transport Scenario Specifications:

Background Ozone:	.04 ppm
Background Visual Range:	181.10 km
Source-Observer Distance:	22.90 km
Min. Source-Class I Distance:	22.90 km
Max. Source-Class I Distance:	27.10 km
Plume-Source-Observer Angle:	11.25 degrees
Stability:	6
Wind Speed:	2.00 m/s

R E S U L T S

Asterisks (*) indicate plume impacts that exceed screening criteria

Maximum Visual Impacts INSIDE Class I Area
Screening Criteria ARE Exceeded

					Delta E		Contrast	
Backgrnd	Theta	Azi	Distance	Alpha	Crit	Plume	Crit	Plume
SKY	10.	125.	27.1	44.	2.00	1.507	.05	.029
SKY	140.	125.	27.1	44.	2.00	.728	.05	-.017
TERRAIN	10.	84.	22.9	84.	2.00	5.327*	.05	.032
TERRAIN	140.	84.	22.9	84.	2.00	.334	.05	.004

Maximum Visual Impacts OUTSIDE Class I Area
Screening Criteria ARE Exceeded

					Delta E		Contrast	
Backgrnd	Theta	Azi	Distance	Alpha	Crit	Plume	Crit	Plume
SKY	10.	1.	1.0	168.	2.00	15.123*	.05	.311*
SKY	140.	1.	1.0	168.	2.00	4.376*	.05	-.152*
TERRAIN	10.	1.	1.0	168.	2.00	28.377*	.05	.291*
TERRAIN	140.	1.	1.0	168.	2.00	5.374*	.05	.113*

Figure 7-3
Visual Effects Screening Analysis for
Source: SG LIVE OAKS
Class I Area: WOLF IS. NWA
LEVEL 2 ANALYSIS - DAYTIME HOURS ONLY

*** User-selected Screening Scenario Results ***

Input Emissions for

Particulates	26.11	LB /HR
NOx (as NO2)	48.96	LB /HR
Primary NO2	.00	LB /HR
Soot	.00	LB /HR
Primary SO4	2.42	LB /HR

**** Default Particle Characteristics Assumed

Transport Scenario Specifications:

Background Ozone:	.04 ppm
Background Visual Range:	181.10 km
Source-Observer Distance:	22.90 km
Min. Source-Class I Distance:	22.90 km
Max. Source-Class I Distance:	27.10 km
Plume-Source-Observer Angle:	11.25 degrees
Stability:	4
Wind Speed:	3.00 m/s

R E S U L T S

Asterisks (*) indicate plume impacts that exceed screening criteria

Maximum Visual Impacts INSIDE Class I Area
Screening Criteria ARE NOT Exceeded

					Delta E		Contrast	
Backgrnd	Theta	Azi	Distance	Alpha	Crit	Plume	Crit	Plume
SKY	10.	125.	27.1	44.	2.81	.291	.05	.006
SKY	140.	125.	27.1	44.	2.00	.140	.05	-.003
TERRAIN	10.	84.	22.9	84.	2.06	1.125	.07	.007
TERRAIN	140.	84.	22.9	84.	2.00	.066	.07	.001

Maximum Visual Impacts OUTSIDE Class I Area
Screening Criteria ARE Exceeded

					Delta E		Contrast	
Backgrnd	Theta	Azi	Distance	Alpha	Crit	Plume	Crit	Plume
SKY	10.	1.	1.0	168.	2.00	5.325*	.05	.098*
SKY	140.	1.	1.0	168.	2.00	1.778	.05	-.057*
TERRAIN	10.	1.	1.0	168.	2.00	12.508*	.05	.118*
TERRAIN	140.	1.	1.0	168.	2.00	1.872	.05	.036

APPENDIX A

EMISSIONS INFORMATION ON SIEMENS SGT6-5000F COMBUSTION TURBINE

TABLE A-1
DESIGN INFORMATION AND STACK PARAMETERS FOR THE LIVE OAKS ENERGY PROJECT
SIEMENS SGT6 5000F CT, NATURAL GAS, BASE LOAD

	CT Only				CT with DB			
	Ambient Temperature/Case No.				Ambient Temperature/Case No.			
Parameter	**20 °F Case 1**	**59 °F Case 2**	**95 °F Case 3**	**95 °F Case 5**	**20 °F Case 19**	**59 °F Case 20**	**95 °F Case 21**	**95 °F Case 12**
Case Description	CT	CT	CT	CT+EC+PA	CT+DB	CT+DB	CT+DB	CT+EC+PA+DB
Evaporative cooler status/ efficiency (%)	Off	Off	Off	85	Off	Off	Off	85
Relative Humidity (%)	80	60	60	60	80	60	60	60
Ambient Pressure (psia)	14.683	14.683	14.683	14.683	14.683	14.683	14.683	14.683
Combustion Turbine Performance								
Gross power output (MW) - provided	222.69	197.22	170.94	198.20	222.69	197.22	170.94	198.20
Gross heat rate (Btu/kWh, LHV) - provided	8,866	9,087	9,470	9,015	8,866	9,087	9,470	9,015
(Btu/kWh, HHV) - provided	9,846	10,091	10,516	10,010	9,846	10,091	10,516	10,010
Heat Input (MMBtu/hr, LHV) - provided	1,974	1,792	1,619	1,787	1,974	1,792	1,619	1,787
(MMBtu/hr, HHV) - provided	2,193	1,990	1,798	1,984	2,193	1,990	1,798	1,984
Fuel heating value (Btu/lb, LHV) - provided	20,982	20,982	20,982	20,982	20,982	20,982	20,982	20,982
(Btu/lb, HHV) - provided	23,299	23,299	23,299	23,299	23,299	23,299	23,299	23,299
(HHV/LHV)	1.110	1.110	1.110	1.110	1.110	1.110	1.110	1.110
Duct Burner (DB)								
Heat input (MMBtu/hr, HHV)	0	0	0	0	310	344	359	312
(MMBtu/hr, LHV)	0	0	0	0	279	310	323	281
CT/DB Exhaust Flow								
Volume flow (acfm) = (mass flow (lb/hr)/molecular weight) x 1545.7 (gas constant, R) x actual temperature (°R)/[2116.8 lb/ft^2 (pressure)] /60 min/hr								
Mass Flow (lb/hr)- provided (fuel mass added for DB)	4,338,117	3,994,809	3,610,849	3,827,580	4,351,416	4,009,593	3,626,243	3,840,972
Temperature (°F) - provided	1,076	1,102	1,141	1,130	1,076	1,102	1,141	1,130
Moisture (% Vol.)	7.76	8.35	10.52	15.62	8.66	9.44	11.77	16.61
Oxygen (% Vol.)	12.58	12.57	12.18	10.97	11.49	11.25	10.67	9.77
Molecular Weight - calculated	28.45	28.38	28.14	27.59	28.41	28.33	28.08	27.54
Volume flow (acfm) - calculated	2,853,327	2,678,342	2,502,244	2,687,151	2,865,996	2,693,347	2,518,873	2,701,167
Fuel Usage - CT Only								
Fuel usage (lb/hr) = Heat Input (MMBtu/hr) x 1,000,000 Btu/MMBtu (Fuel Heat Content, Btu/lb (LHV))								
Heat input (MMBtu/hr, HHV)	2,193	1,990	1,798	1,984	2,193	1,990	1,798	1,984
Heat content (Btu/lb, HHV)	23,299	23,299	23,299	23,299	23,299	23,299	23,299	23,299
Fuel usage (lb/hr)- calculated	94,124	85,411	77,171	85,154	94,124	85,411	77,171	85,154
Fuel usage (lb/hr)- provided	94,104	85,419	77,155	85,157	94,104	85,419	77,155	85,157
Fuel density (lb/ft^3) - typical	0.0432	0.0432	0.0432	0.0432	0.0432	0.0432	0.0432	0.0432
Heat content (Btu/cf, HHV)- calculated	1,007	1,007	1,007	1,007	1,007	1,007	1,007	1,007
Heat content (Btu/cf, LHV)- calculated	906	906	906	906	906	906	906	906
Fuel usage (cf/hr)- calculated	2,178,801	1,977,116	1,786,359	1,971,154	2,178,801	1,977,116	1,786,359	1,971,154
Fuel Usage - Duct Burner Only								
Fuel usage (lb/hr)- calculated	0	0	0	0	13,299	14,784	15,394	13,392
Fuel usage (cf/hr)- calculated	0	0	0	0	307,842	342,225	356,346	310,010
HRSG Stack								
Stack Height (ft) - provided	140	140	140	140	140	140	140	140
Stack Diameter (ft) - provided	19.5	19.5	19.5	19.5	19.5	19.5	19.5	19.5
Stack Temperature (°F) - provided	196.4	195.5	195.9	195.6	192.3	190.1	189.1	190.0
HRSG Stack Flow Conditions								
Velocity (ft/sec) = Volume flow (acfm) / [((diameter)^2 /4) x 3.14159] / 60 sec/min								
CT/DB Mass flow (lb/hr)	4,338,117	3,994,809	3,610,849	3,827,580	4,351,416	4,009,593	3,626,243	3,840,972
CT/DB Volume flow (acfm)	2,853,327	2,678,342	2,502,244	2,687,151	2,865,996	2,693,347	2,518,873	2,701,167
CT Temperature (°F)	1,076	1,102	1,141	1,130	1,076	1,102	1,141	1,130
HRSG Temperature (°F)	196.4	195.5	195.9	195.6	192.3	190.1	189.1	190.0
HRSG Volume flow (acfm)	1,219,358	1,123,896	1,025,169	1,108,001	1,217,201	1,120,943	1,021,271	1,104,225
Molecular weight (CT exhaust)	28.45	28.38	28.14	27.59	28.41	28.33	28.08	27.54
HRSG Volume flow (acfm)(based on mass flow)	1,219,358	1,123,896	1,025,169	1,108,001	1,217,201	1,120,943	1,021,271	1,104,225
Velocity (ft/sec)- calculated	68.0	62.7	57.2	61.8	67.9	62.6	57.0	61.6

Note: Universal gas constant = 1,545.4 ft-lb(force)/°R; atmospheric pressure = 2,114.4 lb(force)/ft^2; 14.683 lb/ft^3.
Source: SIEMENS Performance Data frm CH2M Hill, 2008; Golder Associates, 2008.

TABLE A-2
DESIGN INFORMATION AND STACK PARAMETERS FOR THE LIVE OAKS ENERGY PROJECT
SIEMENS SGT6 5000F CT, NATURAL GAS, BASE LOAD

	CT Only				CT with DB			
	Ambient Temperature/Case No.				Ambient Temperature/Case No.			
Parameter	**20 °F Case 1**	**59 °F Case 2**	**95 °F Case 3**	**95 °F Case 5**	**20 °F Case 19**	**59 °F Case 20**	**95 °F Case 21**	**95 °F Case 12**
Particulate from CT, DB, and HRSG								
Total PM_{10} = PM_{10} (front half) + PM_{10} ($(NH_4)_2SO_4$) in HRSG only (back-half)								
a. PM_{10} (front half) (lb/hr)								
CT- provided	9.0	8.0	8.0	8.0	9.0	8.0	8.0	8.0
DB (lb/hr) - calculated	0.0	0.0	0.0	0.0	2.0	2.2	2.3	2.0
Total CT/DB emission rate (lb/hr)	9.0	8.0	8.0	8.0	11.0	10.2	10.3	10.0
b. PM_{10} ($(NH_4)_2SO_4$) from HRSG only (back half) = Sulfur trioxide from conversion of SO_2 converts to ammonium sulfate (= PM_{10})								
Particulate from conversion of SO_2 = SO_2 emissions (lb/hr) x conversion of SO_2 to SO_3 in CT, DB, and in SCR x lb SO_3 /lb SO_2 x conversion of SO_3 to $(NH_4)_2SO_4$ x lb $(NH_4)_2SO_4$ / lb SO_3								
CT SO_2 emission rate (lb/hr)- calculated	5.0	4.5	4.1	4.5	5.0	4.5	4.1	4.5
Conversion (%) from SO_2 to SO_3 in CT	10.0	10.0	10.0	10.0	10.0	10.0	10.0	10.0
DB SO_2 emission rate (lb/hr)- calculated	--	--	--	--	0.7	0.8	0.8	0.7
Conversion (%) from SO_2 to SO_3 in DB	--	--	--	--	20.0	20.0	20.0	20.0
Remaining SO_2 (lb/hr) after conversion - calculated	4.5	4.1	3.7	4.1	5.0	4.7	4.3	4.6
Conversion (%) from SO_2 to SO_3 in SCR	3.0	3.0	3.0	3.0	3.0	3.0	3.0	3.0
MW SO_3/ SO_2 (80/64)	1.3	1.3	1.3	1.3	1.3	1.3	1.3	1.3
Conversion (%) from SO_3 to $(NH_4)_2(SO_4)$	100	100	100	100	100	100	100	100
MW $(NH_4)_2$ SO_4/ SO_3 (132/80)	1.7	1.7	1.7	1.7	1.7	1.7	1.7	1.7
HRSG Particulate as $(NH_4)_2(SO_4)$ (lb/hr)- calculated	1.30	1.18	1.07	1.18	1.63	1.55	1.45	1.51
Total HRSG stack emission rate (lb/hr) [a + b]	10.3	9.2	9.1	9.2	12.6	11.7	11.7	11.5
(lb/mmBtu, HHV)	NA	NA	NA	NA	NA	NA	NA	NA
Sulfur Dioxide								
SO_2 (lb/hr)= Natural gas (scf/hr) x sulfur content(gr/100 scf) x 1 lb/7000 gr x (lb SO_2 /lb S) /100								
Fuel use (cf/hr)	2,178,801	1,977,116	1,786,359	1,971,154	2,486,643	2,319,340	2,142,705	2,281,164
Sulfur content (grains/ 100 cf)	0.8	0.8	0.8	0.8	0.8	0.8	0.8	0.8
lb SO_2 /lb S (64/32)	2	2	2	2	2	2	2	2
CT/DB emission rate (lb/hr) - calculated	5.0	4.5	4.1	4.5	NA	NA	NA	NA
HRSG stack emission rate (lb/hr) - calculated	5.0	4.5	4.1	4.5	5.7	5.3	4.9	5.2
Nitrogen Oxides								
Oxygen (%, dry)(O_2 dry) = Oxygen (%)/(1-Moisure (%))								
NOx (ppmv actual) = NOx (ppmd @ 15%O_2) x [(20.9 - O_2 dry)/(20.9 - 15)] x (1- Moisture(%)/100)								
NOx (lb/hr) = NOx (ppmv actual) x Volume flow (acfm) x 46 (mole. wgt NOx) x 2116.2 lb/ft^2 (pressure) / [1545.4 (gas constant, R) x Actual Temp. (°R)] x 60 min/hr								
Basis, ppmv actual- calculated	28.4	27.9	27.6	28.2	31.8	32.0	32.3	32.0
ppmvd @15% O_2 - (CT-provided, CT&DB-calculated)	25	25	25	25	24.7	24.6	24.5	24.6
Moisture (%)	7.76	8.35	10.52	15.62	8.66	9.44	11.77	16.61
Oxygen (%)	12.58	12.57	12.18	10.97	11.49	11.25	10.67	9.77
Oxygen (%) dry	13.64	13.72	13.61	13.00	12.58	12.43	12.09	11.71
Turbine Flow (acfm)	2,853,327	2,678,342	2,502,244	2,687,151	2,865,996	2,693,347	2,518,873	2,701,167
Turbine Flow (acfm), dry	2,631,909	2,454,700	2,239,008	2,267,418	2,617,773	2,438,962	2,222,394	2,252,629
Turbine Exhaust Temperature (°F)	1,076	1,102	1,141	1,130	1,076	1,102	1,141	1,130
CT/DB emission rate (lb/hr) - calculated	199.1	180.7	163.1	180.2	223.9	208.2	191.8	205.2
CT/DB Emission rate (lb/hr) - provided	205.0	186.0	168.0	186.0	229.7	213.5	196.6	210.9
HRSG Stack ppmvd @ 15% O_2 - provided	2.5	2.5	2.5	2.5	2.5	2.5	2.5	2.5
HRSG stack emission rate (lb/hr) - calculated	19.9	18.1	16.3	18.0	22.7	21.2	19.6	20.8
HRSG stack emission rate (lb/hr) - provided	20.5	18.6	16.8	18.6	23.3	21.7	20.1	21.4

TABLE A-2
DESIGN INFORMATION AND STACK PARAMETERS FOR THE LIVE OAKS ENERGY PROJECT
SIEMENS SGT6 5000F CT, NATURAL GAS, BASE LOAD

	CT Only				CT with DB			
	Ambient Temperature/Case No.				Ambient Temperature/Case No.			
Parameter	**20 °F Case 1**	**59 °F Case 2**	**95 °F Case 3**	**95 °F Case 5**	**20 °F Case 19**	**59 °F Case 20**	**95 °F Case 21**	**95 °F Case 12**
Carbon Monoxide								
Oxygen (%, dry)(O_2 dry) = Oxygen (%)/(1-Moisure (%))								
CO (ppmv wet or actual) = CO (ppmvd @ 15%O_2) x [(20.9 - O_2 dry)/(20.9 - 15)] x (1- Moisture(%)/100)								
CO (lb/hr) = CO (ppm actual) x Volume flow (acfm) x 28 (mole. wgt CO) x 2116.2 lb/ft^2 (pressure) / [1545.4 (gas constant, R) x Actual Temp. (°R)] x 60 min/hr								
Basis, ppmv actual- calculated	11.35	11.16	11.05	11.30	18.5	19.8	20.9	19.2
ppmvd @15% O_2 - (CT-provided, CT&DB-calculated)	10.00	10.00	10.00	10.00	14.4	15.2	15.9	14.8
Moisture (%)	7.76	8.35	10.52	15.62	8.66	9.44	11.77	16.61
Oxygen (%)	12.58	12.57	12.18	10.97	11.49	11.25	10.67	9.77
Oxygen (%) dry	13.64	13.72	13.61	13.00	12.58	12.43	12.09	11.71
Turbine Flow (acfm)	2,853,327	2,678,342	2,502,244	2,687,151	2,865,996	2,693,347	2,518,873	2,701,167
Turbine Flow (acfm), dry	2,631,909	2,454,700	2,239,008	2,267,418	2,617,773	2,438,962	2,222,394	2,252,629
Turbine Exhaust Temperature (°F)	1,076	1,102	1,141	1,130	1,076	1,102	1,141	1,130
CT/DB emission rate (lb/hr) - calculated	48.5	44.0	39.7	43.9	79.5	78.4	75.6	75.1
CT/DB Emission rate (lb/hr) - provided	50.0	45.0	41.0	45.0	80.9	79.4	76.8	76.0
HRSG Stack emission rate, ppmvd @ 15% O_2 - provided	2.0	2.0	2.0	2.0	2.9	3.0	3.2	3.0
HRSG Stack emission rate (lb/hr)- calculated	9.7	8.8	7.9	8.8	15.9	15.7	15.1	15.0
HRSG stack emission rate (lb/hr) - provided	10.0	9.0	8.2	9.0	16.2	15.9	15.4	15.2
Volatile Organic Compounds								
Oxygen (%, dry)(O_2 dry) = Oxygen (%)/(1-Moisure (%))								
VOC (ppmv wet or actual) = VOC (ppmvd @ 15%O_2) x [(20.9 - O_2 dry)/(20.9 - 15)] x (1- Moisture(%)/100)								
VOC (lb/hr) = VOC (ppm actual) x Volume flow (acfm) x 16 (mole. wgt CH4) x 2116.2 lb/ft^2 (pressure) / [1545.4 (gas constant, R) x Actual Temp. (°R)] x 60 min/hr								
Basis, ppmv actual- calculated	1.14	1.12	1.11	1.13	7.4	8.7	9.8	8.1
ppmvd @15% O_2 - (CT-provided, CT&DB-calculated)	1.00	1.00	1.00	1.00	5.8	6.7	7.4	6.2
Moisture (%)	7.76	8.35	10.52	15.62	8.66	9.44	11.77	16.61
Oxygen (%) wet	12.58	12.57	12.18	10.97	11.49	11.25	10.67	9.77
Oxygen (%) dry	13.64	13.72	13.61	13.00	12.58	12.43	12.09	11.71
Turbine Flow (acfm)	2,853,327	2,678,342	2,502,244	2,687,151	2,865,996	2,693,347	2,518,873	2,701,167
Turbine Flow (acfm), dry	2,631,909	2,454,700	2,239,008	2,267,418	2,617,773	2,438,962	2,222,394	2,252,629
Turbine Exhaust Temperature (°F)	1,076	1,102	1,141	1,130	1,076	1,102	1,141	1,130
CT/DB emission rate (lb/hr) - calculated	2.77	2.52	2.27	2.51	18.3	19.7	20.2	18.1
CT/DB Emission rate (lb/hr) - provided	2.90	2.60	2.30	2.60	18.4	19.8	20.2	18.2
HRSG Stack emission rate, ppmvd @ 15% O_2 - provided	1.0	1.0	1.0	1.0	5.8	6.7	7.4	6.2
HRSG Stack emission rate (lb/hr)- calculated	2.77	2.52	2.27	2.51	18.3	19.7	20.2	18.1
Sulfuric Acid Mist								
Sulfuric Acid Mist (lb/hr)= SO_2 emission (lb/hr) x Conversion to H_2SO_4 (% by weight)/100								
CT SO_2 emission rate (lb/hr) - calculated	5.0	4.5	4.1	4.5	5.0	4.5	4.1	4.5
CT Conversion to H_2SO_4 (% by weight) - provided	10	10	10	10	10	10	10	10
DB SO_2 emission rate (lb/hr) - provided	--	--	--	--	0.7	0.8	0.8	0.7
DB Conversion to H_2SO_4 (%) - provided	--	--	--	--	20	20	20	20
SCR SO_2 (lb/hr)(remaining SO_2 after conversion) - calc	4.5	4.1	3.7	4.1	5.0	4.7	4.3	4.6
SCR Conversion to H_2SO_4 (% by weight) - provided	3	3	3	3	3	3	3	3
HRSG Stack emission rate (lb/hr)	0.97	0.88	0.79	0.88	1.21	1.15	1.07	1.12
Ammonia								
Oxygen (%, dry)(O_2 dry) = Oxygen (%)/(1-Moisure (%))								
Ammonia (ppmv wet or actual) = Ammonia (ppmvd @ 15%O_2) x [(20.9 - O_2 dry)/(20.9 - 15)] x (1- Moisture(%)/100)								
Ammonia (lb/hr) = Ammonia (ppm actual) x Volume flow (acfm) x 17 (mole. wgt NH3) x 2116.2 lb/ft^2 (pressure) / [1545.4 (gas constant, R) x Actual Temp. (°R)] x 60 min/hr								
Basis, ppmv actual- calculated	10.22	10.04	9.95	10.17	11.59	11.71	11.85	11.69
ppmvd @15% O_2 - (industry standard)	9.00	9.00	9.00	9.00	9.0	9.0	9.0	9.0
Moisture (%)	7.76	8.35	10.52	15.62	8.66	9.44	11.77	16.61
Oxygen (%)	12.58	12.57	12.18	10.97	11.49	11.25	10.67	9.77
Oxygen (%) dry	13.64	13.72	13.61	13.00	12.58	12.43	12.09	11.71
Turbine Flow (acfm)	2,853,327	2,678,342	2,502,244	2,687,151	2,865,996	2,693,347	2,518,873	2,701,167
Turbine Flow (acfm), dry	2,631,909	2,454,700	2,239,008	2,267,418	2,617,773	2,438,962	2,222,394	2,252,629
Turbine Exhaust Temperature (°F)	1,076	1,102	1,141	1,130	1,076	1,102	1,141	1,130
CT/DB emission rate (lb/hr) - calculated	26.5	24.0	21.7	24.0	30.2	28.2	26.0	27.7

Note: ppmvd= parts per million, volume dry; O_2= oxygen.
Source: SIEMENS Performance Data frm CH2M Hill, 2008; Golder Associates, 2008.

TABLE A-3
DESIGN INFORMATION AND STACK PARAMETERS FOR THE LIVE OAKS ENERGY PROJECT
SIEMENS SGT6 5000F CT, NATURAL GAS, 70% LOAD

Parameter	CT Only - 70% Load Ambient Temperature/Case No. 20 °F Case 16	59 °F Case 17	95 °F Case 18
Case Description	CT	CT	CT
Evaporative cooler status/ efficiency (%)	Off	Off	Off
Relative Humidity (%)	80	60	60
Ambient Pressure (psia)	14.683	14.683	14.683
Combustion Turbine Performance			
Gross power output (MW) - provided	155.88	138.05	119.66
Gross heat rate (Btu/kWh, LHV) - provided	9,541	9,895	10,419
(Btu/kWh, HHV) - provided	10,594	10,988	11,570
Heat Input (MMBtu/hr, LHV) - provided	1,487	1,366	1,247
(MMBtu/hr, HHV) - provided	1,651	1,517	1,384
Fuel heating value (Btu/lb, LHV) - provided	20,982	20,982	20,982
(Btu/lb, HHV) - provided	23,299	23,299	23,299
(HHV/LHV)	1.110	1.110	1.110
CT Exhaust Flow			
Volume flow (acfm) = (mass flow (lb/hr)/molecular weight) x 1545.7 (gas constant, R) x actual temperature (°R)/[2116.8 lb/ft^2 (pressure)] /60 min/hr			
Mass Flow (lb/hr)- provided	3,407,906	3,190,738	2,919,150
Temperature (°F) - provided	1,076	1,102	1,141
Moisture (% Vol.)	7.46	8.02	10.18
Oxygen (% Vol.)	12.92	12.94	12.56
Molecular Weight - calculated	28.47	28.40	28.16
Volume flow (acfm) - calculated	2,239,736	2,137,911	2,021,852
Fuel Usage - CT Only			
Fuel usage (lb/hr) = Heat Input (MMBtu/hr) x 1,000,000 Btu/MMBtu (Fuel Heat Content, Btu/lb (LHV))			
Heat input (MMBtu/hr, HHV)	1,651	1,517	1,384
Heat content (Btu/lb, HHV)	23,299	23,299	23,299
Fuel usage (lb/hr)- calculated	70,861	65,110	59,402
Fuel usage (lb/hr)- provided	70,883	65,105	59,421
Fuel density (lb/ft^3) - provided	0.0432	0.0432	0.0432
Heat content (Btu/cf, HHV)- calculated	1,007	1,007	1,007
Heat content (Btu/cf, LHV)- calculated	906	906	906
Fuel usage (cf/hr)- calculated	1,640,310	1,507,178	1,375,039
HRSG Stack			
Stack Height (ft) - provided	140	140	140
Stack Diameter (ft) - provided	19.5	19.5	19.5
Stack Temperature (^{o}F) - provided	187.4	187.5	189.5
HRSG Stack Flow Conditions			
Velocity (ft/sec) = Volume flow (acfm) / [((diameter)^2 /4) x 3.14159] / 60 sec/min			
CT Mass flow (lb/hr)	3,407,906	3,190,738	2,919,150
CT Volume flow (acfm)	2,239,736	2,137,911	2,021,852
CT Temperature (°F)	1,076	1,102	1,141
HRSG Temperature (°F)	187.4	187.5	189.5
HRSG Volume flow (acfm)	943,984	886,254	820,266
Molecular weight (CT exhaust)	28.47	28.40	28.16
CT Volume flow (acfm) - check	943,984	886,254	820,266
Velocity (ft/sec)- calculated	52.7	49.5	45.8

Note: Universal gas constant = 1,545.7 ft-lb(force)/°R; atmospheric pressure = 2,116.8 lb(force)/ft^2; 14.7 lb/ft^3.
Source: SIEMENS Performance Data frm CH2M Hill, 2008; Golder Associates, 2008.

TABLE A-4
DESIGN INFORMATION AND STACK PARAMETERS FOR THE LIVE OAKS ENERGY PROJECT
SIEMENS SGT6 5000F CT, NATURAL GAS, 70% LOAD

	CT Only - 70% Load		
	Ambient Temperature/Case No.		
Parameter	**20 °F**	**59 °F**	**95 °F**
	Case 16	**Case 17**	**Case 18**
Particulate from CT and HRSG			
Total PM_{10} = PM_{10} (front half) + PM_{10} ($(NH_4)_2SO_4$) in HRSG only (back-half)			
a. PM_{10} (front half) (lb/hr)			
CT Emission Rate (lb/hr) - provided	8.0	8.0	8.0
b. PM_{10} ($(NH_4)_2SO_4$) from HRSG only (back half) = Sulfur trioxide from conversion of SO_2 converts to ammonium sulfate (= PM_{10})			
Particulate from conversion of SO_2 = SO_2 emissions (lb/hr) x conversion of SO_2 to SO_3 in CT and in SCR x lb SO_3/lb SO_2 x conversion of SO_3 to $(NH_4)_2SO_4$ x lb $(NH_4)_2SO_4$/ lb SO_3			
CT SO_2 emission rate (lb/hr)- calculated	3.7	3.4	3.1
Conversion (%) from SO_2 to SO_3 in CT	10.0	10.0	10.0
Remaining SO_2 (lb/hr) after conversion - calculated	3.4	3.1	2.8
Conversion (%) from SO_2 to SO_3 in SCR	3.0	3.0	3.0
MW SO_3/ SO_2 (80/64)	1.3	1.3	1.3
Conversion (%) from SO_3 to $(NH_4)_2(SO_4)$	100	100	100
MW $(NH_4)_2$ SO_4/ SO_3 (132/80)	1.7	1.7	1.7
HRSG Particulate as $(NH_4)_2(SO_4)$ (lb/hr)- calculated	0.98	0.90	0.82
Total HRSG stack emission rate (lb/hr) [a + b]	9.0	8.9	8.8
(lb/mmBtu, HHV)	NA	NA	NA
Sulfur Dioxide			
SO_2 (lb/hr)= Natural gas (scf/hr) x sulfur content(gr/100 scf) x 1 lb/7000 gr x (lb SO_2 /lb S) /100			
Fuel use (cf/hr)	1,640,310	1,507,178	1,375,039
Sulfur content (grains/ 100 cf)	0.8	0.8	0.8
lb SO_2 /lb S (64/32)	2	2	2
CT emission rate (lb/hr) - calculated	3.7	3.4	3.1
HRSG stack emission rate (lb/hr) - calculated	3.7	3.4	3.1
Nitrogen Oxides			
Oxygen (%, dry)(O_2 dry) = Oxygen (%)/(1-Moisure (%))			
NOx (ppmv actual) = NOx (ppmd @ 15%O_2) x [(20.9 - O_2 dry)/(20.9 - 15)] x (1- Moisture(%)/100)			
NOx (lb/hr) = NOx (ppmv actual) x Volume flow (acfm) x 46 (mole. wgt NOx) x 2116.2 lb/ft^2 (pressure) / [1545.4 (gas constant, R) x Actual Temp. (°R)] x 60 min/hr			
Basis, ppmv actual- calculated	27.2	26.6	26.3
Basis, ppmvd @15% O_2 - provided	25	25	25
Moisture (%)	7.46	8.02	10.18
Oxygen (%)	12.92	12.94	12.56
Oxygen (%) dry	13.96	14.07	13.98
Turbine Flow (acfm)	2,239,736	2,137,911	2,021,852
Turbine Flow (acfm), dry	2,072,652	1,966,451	1,816,027
Turbine Exhaust Temperature (°F)	1,076	1,102	1,141
CT emission rate (lb/hr) - calculated	149.8	137.6	125.5
CT Emission rate (lb/hr) - provided	154.0	142.0	129.0
HRSG Stack ppmvd @ 15% O_2 - provided	2.5	2.5	2.5
HRSG stack emission rate (lb/hr) - calculated	15.0	13.8	12.6
HRSG stack emission rate (lb/hr) - provided	15.4	14.2	12.9

TABLE A-4
DESIGN INFORMATION AND STACK PARAMETERS FOR THE LIVE OAKS ENERGY PROJECT
SIEMENS SGT6 5000F CT, NATURAL GAS, 70% LOAD

	CT Only - 70% Load		
	Ambient Temperature/Case No.		
Parameter	**20 °F**	**59 °F**	**95 °F**
	Case 16	**Case 17**	**Case 18**
Carbon Monoxide			
Oxygen (%, dry)(O_2 dry) = Oxygen (%)/(1-Moisure (%))			
CO (ppmv wet or actual) = CO (ppmvd @ 15%O_2) x [(20.9 - O_2 dry)/(20.9 - 15)] x (1- Moisture(%)/100)			
CO (lb/hr) = CO (ppm actual) x Volume flow (acfm) x 28 (mole. wgt CO) x 2116.2 lb/ft^2 (pressure) / [1545.4 (gas constant, R) x Actual Temp. (°R)] x 60 min/hr			
Basis, ppmv actual- calculated	10.88	10.65	10.53
ppmvd @15% O_2 - (CT-provided, CT&DB-calculated)	10.00	10.00	10.00
Moisture (%)	7.46	8.02	10.18
Oxygen (%)	12.92	12.94	12.56
Oxygen (%) dry	13.96	14.07	13.98
Turbine Flow (acfm)	2,239,736	2,137,911	2,021,852
Turbine Flow (acfm), dry	2,072,652	1,966,451	1,816,027
Turbine Exhaust Temperature (°F)	1,076	1,102	1,141
CT emission rate (lb/hr) - calculated	36.5	33.5	30.6
CT Emission rate (lb/hr) - provided	38.0	35.0	32.0
HRSG Stack emission rate, ppmvd @ 15% O_2 - provided	2.0	2.0	2.0
HRSG Stack emission rate (lb/hr)- calculated	7.3	6.7	6.1
HRSG stack emission rate (lb/hr) - provided	7.6	7.0	6.4
Volatile Organic Compounds			
Oxygen (%, dry)(O_2 dry) = Oxygen (%)/(1-Moisure (%))			
VOC (ppmv wet or actual) = VOC (ppmvd @ 15%O_2) x [(20.9 - O_2 dry)/(20.9 - 15)] x (1- Moisture(%)/100)			
VOC (lb/hr) = VOC (ppm actual) x Volume flow (acfm) x 16 (mole. wgt CH4) x 2116.2 lb/ft^2 (pressure) / [1545.4 (gas constant, R) x Actual Temp. (°R)] x 60 min/hr			
Basis, ppmv actual- calculated	1.09	1.07	1.05
ppmvd @15% O_2 - (CT-provided, CT&DB-calculated)	1.00	1.00	1.00
Moisture (%)	7.46	8.02	10.18
Oxygen (%) wet	12.92	12.94	12.56
Oxygen (%) dry	13.96	14.07	13.98
Turbine Flow (acfm)	2,239,736	2,137,911	2,021,852
Turbine Flow (acfm), dry	2,072,652	1,966,451	1,816,027
Turbine Exhaust Temperature (°F)	1,076	1,102	1,141
CT emission rate (lb/hr) - calculated	2.09	1.92	1.75
CT Emission rate (lb/hr) - provided	2.20	2.00	1.80
HRSG Stack emission rate, ppmvd @ 15% O_2 - provided	1.0	1.0	1.0
HRSG stack emission rate (lb/hr) - provided	2.2	2.0	1.8
Sulfuric Acid Mist			
Sulfuric Acid Mist (lb/hr)= SO_2 emission (lb/hr) x Conversion to H_2SO_4 (% by weight)/100			
CT SO_2 emission rate (lb/hr) - calculated	3.7	3.4	3.1
CT Conversion to H_2SO_4 (% by weight) - provided	10	10	10
SCR SO_2 (lb/hr)(remaining SO_2 after conversion) - calc	3.4	3.1	2.8
SCR Conversion to H_2SO_4 (% by weight) - provided	3	3	3
HRSG Stack emission rate (lb/hr)	0.73	0.67	0.61
Ammonia			
Oxygen (%, dry)(O_2 dry) = Oxygen (%)/(1-Moisure (%))			
Ammonia (ppmv wet or actual) = Ammonia (ppmvd @ 15%O_2) x [(20.9 - O_2 dry)/(20.9 - 15)] x (1- Moisture(%)/100)			
Ammonia (lb/hr) = Ammonia (ppm actual) x Volume flow (acfm) x 17 (mole. wgt NH3) x 2116.2 lb/ft^2 (pressure) / [1545.4 (gas constant, R) x Actual Temp. (°R)] x 60 min/hr			
Basis, ppmv actual- calculated	9.79	9.59	9.48
ppmvd @15% O_2 - (industry standard)	9.00	9.00	9.00
Moisture (%)	7.46	8.02	10.18
Oxygen (%)	12.92	12.94	12.56
Oxygen (%) dry	13.96	14.07	13.98
Turbine Flow (acfm)	2,239,736	2,137,911	2,021,852
Turbine Flow (acfm), dry	2,072,652	1,966,451	1,816,027
Turbine Exhaust Temperature (°F)	1,076	1,102	1,141
CT/DB emission rate (lb/hr) - calculated	19.9	18.3	16.7

Note: ppmvd= parts per million, volume dry; O_2= oxygen.
Source: SIEMENS Performance Data frm CH2M Hill, 2008; Golder Associates, 2008.

TABLE A-5
REGULATED AND HAZARDOUS AIR POLLUTANT EMISSION FACTORS AND EMISSIONS FOR THE LIVE OAKS ENERGY PROJECT - ANNUAL EMISSIONS

Heat Input (MMBtu/hr) per Unit, CT Only	1,990	Baseload at 59 F.
Heat Input (MMBtu/hr) per Unit, DB Only	344	HHV
Total Heat Input (MMBtu/hr) per Unit	2,334	CT+DB baseload at 59 F.
Duct Burner Fuel Flow ($MMft^3/hr$)	0.31	
Annual Operating Hours per Turbine	8,760	
Annual Operating Hours per Duct Burner	4,000	

Calculations

Emission Rate (lb/hr) = Emission Factor (lb/MMscf) * Fuel Use (MMscf/hr) OR Emission Factor (lb/MMBtu) * Heat Input (MMBtu/hr)
Emission Rate (tpy) = Emission Rate (lb/hr) * (hours/year / 2000 lbs/ton)

	Combustion Turbine Emission Rates				Duct Firing Emission Rates				Total Emission Rates	
Pollutant	Emission Factor [1]	Units	lb/hr	tons/year	Emission Factor [2]	Units	lb/hr	tons/year	lb/hr	tons/year
1,3-Butadiene	4.3E-07	lb/MMBtu	8.6E-04	3.7E-03	--	--	--	--	8.6E-04	3.7E-03
Acetaldehyde	4.0E-05	lb/MMBtu	8.0E-02	3.5E-01	--	--	--	--	8.0E-02	3.5E-01
Acrolein	6.4E-06	lb/MMBtu	1.3E-02	5.6E-02	--	--	--	--	1.3E-02	5.6E-02
Benzene [3]	1.2E-05	lb/MMBtu	2.4E-02	1.0E-01	2.1E-03	lb/MMCF	6.5E-04	1.3E-03	2.5E-02	1.1E-01
Ethylbenzene	3.2E-05	lb/MMBtu	6.4E-02	2.8E-01	--	--	--	--	6.4E-02	2.8E-01
Formaldehyde [4]	0.091	ppmvd	0.429	1.9E+00	7.5E-02	lb/MMCF	2.3E-02	4.6E-02	4.5E-01	1.9E+00
Naphthalene	1.3E-06	lb/MMBtu	2.6E-03	1.1E-02	6.1E-04	lb/MMCF	1.9E-04	3.8E-04	2.8E-03	1.2E-02
Polycyclic Aromatic Hydrocarbons (PAH)	2.2E-06	lb/MMBtu	4.4E-03	1.9E-02	--	--	--	--	4.4E-03	1.9E-02
Propylene Oxide	2.9E-05	lb/MMBtu	5.8E-02	2.5E-01	--	--	--	--	5.8E-02	2.5E-01
Toluene	1.3E-04	lb/MMBtu	2.6E-01	1.1E+00	3.4E-03	lb/MMCF	1.0E-03	2.1E-03	2.6E-01	1.1E+00
Xylenes	6.4E-05	lb/MMBtu	1.3E-01	5.6E-01	--	--	--	--	1.3E-01	5.6E-01
2-Methylnaphthalene	--	--	--	--	2.4E-05	lb/MMCF	7.4E-06	1.5E-05	7.4E-06	1.5E-05
3-Methylchloranthrene	--	--	--	--	1.8E-06	lb/MMCF	5.5E-07	1.1E-06	5.5E-07	1.1E-06
7,12-Dimethylbenz(a)anthracene	--	--	--	--	1.6E-05	lb/MMCF	4.9E-06	9.9E-06	4.9E-06	9.9E-06
Acenaphthene	--	--	--	--	1.8E-06	lb/MMCF	5.5E-07	1.1E-06	5.5E-07	1.1E-06
Acenaphthylene	--	--	--	--	1.8E-06	lb/MMCF	5.5E-07	1.1E-06	5.5E-07	1.1E-06
Anthracene	--	--	--	--	2.4E-06	lb/MMCF	7.4E-07	1.5E-06	7.4E-07	1.5E-06
Benz(a)anthracene	--	--	--	--	1.8E-06	lb/MMCF	5.5E-07	1.1E-06	5.5E-07	1.1E-06
Benzo(a)pyrene	--	--	--	--	1.2E-06	lb/MMCF	3.7E-07	7.4E-07	3.7E-07	7.4E-07
Benzo(b)fluoranthene	--	--	--	--	1.8E-06	lb/MMCF	5.5E-07	1.1E-06	5.5E-07	1.1E-06
Benzo(g,h,i)perylene	--	--	--	--	1.2E-06	lb/MMCF	3.7E-07	7.4E-07	3.7E-07	7.4E-07
Benzo(k)fluoranthene	--	--	--	--	1.8E-06	lb/MMCF	5.5E-07	1.1E-06	5.5E-07	1.1E-06
Chrysene	--	--	--	--	1.8E-06	lb/MMCF	5.5E-07	1.1E-06	5.5E-07	1.1E-06
Dibenzo(a,h)anthracene	--	--	--	--	1.2E-06	lb/MMCF	3.7E-07	7.4E-07	3.7E-07	7.4E-07
Dichlorobenzene	--	--	--	--	1.2E-03	lb/MMCF	3.7E-04	7.4E-04	3.7E-04	7.4E-04
Fluoranthene	--	--	--	--	3.0E-06	lb/MMCF	9.2E-07	1.8E-06	9.2E-07	1.8E-06
Fluorene	--	--	--	--	2.8E-06	lb/MMCF	8.6E-07	1.7E-06	8.6E-07	1.7E-06
Hexane [3]	--	--	--	--	1.3E-03	lb/MMCF	4.0E-04	8.0E-04	4.0E-04	8.0E-04
Indeno(1,2,3-cd)pyrene	--	--	--	--	1.8E-06	lb/MMCF	5.5E-07	1.1E-06	5.5E-07	1.1E-06
Phenanathrene	--	--	--	--	1.7E-05	lb/MMCF	5.2E-06	1.0E-05	5.2E-06	1.0E-05
Pyrene	--	--	--	--	5.0E-06	lb/MMCF	1.5E-06	3.1E-06	1.5E-06	3.1E-06
Arsenic	--	--	--	--	2.0E-04	lb/MMCF	6.2E-05	1.2E-04	6.2E-05	1.2E-04
Beryllium	--	--	--	--	1.2E-05	lb/MMCF	3.7E-06	7.4E-06	3.7E-06	7.4E-06
Cadmium	--	--	--	--	1.1E-03	lb/MMCF	3.4E-04	6.8E-04	3.4E-04	6.8E-04
Chromium	--	--	--	--	1.4E-03	lb/MMCF	4.3E-04	8.6E-04	4.3E-04	8.6E-04
Cobalt	--	--	--	--	8.4E-05	lb/MMCF	2.6E-05	5.2E-05	2.6E-05	5.2E-05
Lead	--	--	--	--	5.0E-04	lb/MMCF	1.5E-04	3.1E-04	1.5E-04	3.1E-04
Manganese	--	--	--	--	3.8E-04	lb/MMCF	1.2E-04	2.3E-04	1.2E-04	2.3E-04
Mercury	--	--	--	--	2.6E-04	lb/MMCF	8.0E-05	1.6E-04	8.0E-05	1.6E-04
Nickel	--	--	--	--	2.1E-03	lb/MMCF	6.5E-04	0.001	6.5E-04	1.3E-03
Selenium	--	--	--	--	2.4E-05	lb/MMCF	7.4E-06	1.5E-05	7.4E-06	1.5E-05
		Total CT HAPs =	**1.06**	**4.64**				**Total CT+DB HAPs =**	**1.1**	**4.7**
								Max. Individual HAP (CT+DB) =	**0.5**	**1.9**

[1] Emission factor from Table 3.1-3, AP-42, EPA, April 2000.
[2] Emission factor from Tables 1.4-3 and 1.4-4, AP-42, EPA, July 1998.
[3] DB Emission factor from "AB 2588 Combustion Emission Factors", Ventura County Air Pollution Control District, Ventura, CA 2001.
[4] See Table A-5a. Emission factor is equivalent to combustion turbine MACT limit (not an applicable standard for this project) of 091 ppmvd at 15% O_2.

TABLE A-5a
MAXIMUM FORMALDEHYDE EMISSIONS
FOR THE LIVE OAKS ENERGY PROJECT

Parameter	Turbine Inlet Temperature & Case No.		
	(CT Only - Baseload) 59 °F Case 2	(CT with DB - Baseload) 59 °F Case 20	(CT Only - 70% Load) 59 °F Case 17
Formaldehyde (CH_2O) (MW = 30)			
CH_2O (lb/hr) = CH_2O (ppmvd actual) x Volume flow (acfm, dry) x 30 (mole. wgt CH_2O) x 2116.8 lb/ft^2 (pressure) / [1545.7 (gas constant, R) x Actual Temp. (°R)] x 60 min/hr			
CH_2O (ppmv actual) = CH_2O (ppmd @ 15%O_2) x [(20.9 - O_2 dry)/(20.9 - 15)] x (1- Moisture(%)/100)			
Oxygen (%, dry)(O_2 dry) = Oxygen (%)/(1-Moisure (%))			
Basis, ppmv actual- calculated	0.102	0.118	0.097
CT, ppmvd @15% O_2	0.091	0.091	0.091
Moisture (%)	8.35	9.44	8.02
Oxygen (%)	12.57	11.25	12.94
Oxygen (%) dry	13.72	12.43	14.07
Exhaust Flow (acfm)	2,678,342	2,693,347	2,137,911
Exhaust Flow (acfm), dry	2,454,700	2,438,962	1,966,451
Exhaust Temperature (°F)	1,102	1,102	1,102
CT Emission rate (lb/hr)	0.429	0.503	0.327
CT Emission rate (lb/10^{12} Btu) (HHV)	215.5	215.3	215.4

Note: ppmvd= parts per million, volume dry; O2= oxygen.
Source: SIEMENS Performance Data frm CH2M Hill, 2008; Golder Associates, 2008.

Table A-5b
REGULATED AND HAZARDOUS AIR POLLUTANT EMISSION FACTORS AND EMISSIONS FOR THE LIVE OAKS ENERGY PROJECT - WORST-CASE HOURLY EMISSIONS

Heat Input (MMBtu/hr) per Unit, CT Only	2,193	Baseload at 20 F.
Heat Input (MMBtu/hr) per Unit, DB Only	359	HHV
Duct Burner Fuel Flow ($MMft^3/hr$)	0.31	
Annual Operating Hours per Turbine	8,760	
Annual Operating Hours per Duct Burner	4,000	

Calculations

Emission Rate (lb/hr) = Emission Factor (lb/MMscf) * Fuel Use (MMscf/hr) OR Emission Factor (lb/MMBtu) * Heat Input (MMBtu/hr)
Emission Rate (tpy) = Emission Rate (lb/hr) * (hours/year / 2000 lbs/ton)

	Combustion Turbine Emission Rates			Duct Firing Emission Rates			Total Emission Rates
Pollutant	Emission Factor [1]	Units	lb/hr	Emission Factor [2]	Units	lb/hr	lb/hr
1,3-Butadiene	4.3E-07	lb/MMBtu	9.4E-04	--	--	--	9.4E-04
Acetaldehyde	4.0E-05	lb/MMBtu	8.8E-02	--	--	--	8.8E-02
Acrolein	6.4E-06	lb/MMBtu	1.4E-02	--	--	--	1.4E-02
Benzene [3]	1.2E-05	lb/MMBtu	2.6E-02	2.1E-03	lb/MMCF	6.5E-04	2.7E-02
Ethylbenzene	3.2E-05	lb/MMBtu	7.0E-02	--	--	--	7.0E-02
Formaldehyde [4]	0.091	ppmvd	0.429	7.5E-02	lb/MMCF	2.3E-02	4.5E-01
Naphthalene	1.3E-06	lb/MMBtu	2.9E-03	6.1E-04	lb/MMCF	1.9E-04	3.0E-03
Polycyclic Aromatic Hydrocarbons (PAH)	2.2E-06	lb/MMBtu	4.8E-03	--	--	--	4.8E-03
Propylene Oxide	2.9E-05	lb/MMBtu	6.4E-02	--	--	--	6.4E-02
Toluene	1.3E-04	lb/MMBtu	2.9E-01	3.4E-03	lb/MMCF	1.0E-03	2.9E-01
Xylenes	6.4E-05	lb/MMBtu	1.4E-01	--	--	--	1.4E-01
2-Methylnaphthalene	--	--	--	2.4E-05	lb/MMCF	7.4E-06	7.4E-06
3-Methylchloranthrene	--	--	--	1.8E-06	lb/MMCF	5.5E-07	5.5E-07
7,12-Dimethylbenz(a)anthracene	--	--	--	1.6E-05	lb/MMCF	4.9E-06	4.9E-06
Acenaphthene	--	--	--	1.8E-06	lb/MMCF	5.5E-07	5.5E-07
Acenaphthylene	--	--	--	1.8E-06	lb/MMCF	5.5E-07	5.5E-07
Anthracene	--	--	--	2.4E-06	lb/MMCF	7.4E-07	7.4E-07
Benz(a)anthracene	--	--	--	1.8E-06	lb/MMCF	5.5E-07	5.5E-07
Benzo(a)pyrene	--	--	--	1.2E-06	lb/MMCF	3.7E-07	3.7E-07
Benzo(b)fluoranthene	--	--	--	1.8E-06	lb/MMCF	5.5E-07	5.5E-07
Benzo(g,h,i)perylene	--	--	--	1.2E-06	lb/MMCF	3.7E-07	3.7E-07
Benzo(k)fluoranthene	--	--	--	1.8E-06	lb/MMCF	5.5E-07	5.5E-07
Chrysene	--	--	--	1.8E-06	lb/MMCF	5.5E-07	5.5E-07
Dibenzo(a,h)anthracene	--	--	--	1.2E-06	lb/MMCF	3.7E-07	3.7E-07
Dichlorobenzene	--	--	--	1.2E-03	lb/MMCF	3.7E-04	3.7E-04
Fluoranthene	--	--	--	3.0E-06	lb/MMCF	9.2E-07	9.2E-07
Fluorene	--	--	--	2.8E-06	lb/MMCF	8.6E-07	8.6E-07
Hexane [3]	--	--	--	1.3E-03	lb/MMCF	4.0E-04	4.0E-04
Indeno(1,2,3-cd)pyrene	--	--	--	1.8E-06	lb/MMCF	5.5E-07	5.5E-07
Phenanathrene	--	--	--	1.7E-05	lb/MMCF	5.2E-06	5.2E-06
Pyrene	--	--	--	5.0E-06	lb/MMCF	1.5E-06	1.5E-06
Arsenic	--	--	--	2.0E-04	lb/MMCF	6.2E-05	6.2E-05
Beryllium	--	--	--	1.2E-05	lb/MMCF	3.7E-06	3.7E-06
Cadmium	--	--	--	1.1E-03	lb/MMCF	3.4E-04	3.4E-04
Chromium	--	--	--	1.4E-03	lb/MMCF	4.3E-04	4.3E-04
Cobalt	--	--	--	8.4E-05	lb/MMCF	2.6E-05	2.6E-05
Lead	--	--	--	5.0E-04	lb/MMCF	1.5E-04	1.5E-04
Manganese	--	--	--	3.8E-04	lb/MMCF	1.2E-04	1.2E-04
Mercury	--	--	--	2.6E-04	lb/MMCF	8.0E-05	8.0E-05
Nickel	--	--	--	2.1E-03	lb/MMCF	6.5E-04	6.5E-04
Selenium	--	--	--	2.4E-05	lb/MMCF	7.4E-06	7.4E-06
		Total CT HAPs =	**1.12**			**Total CT+DB HAPs =**	**1.2**
						Max. Individual HAP (CT+DB) =	**0.5**

[1] Emission factor from Table 3.1-3, AP-42, EPA, April 2000.
[2] Emission factor from Tables 1.4-3 and 1.4-4, AP-42, EPA, July 1998.
[3] DB Emission factor from "AB 2588 Combustion Emission Factors", Ventura County Air Pollution Control District, Ventura, CA 2001.
[4] See Table A-5a. Emission factor is equivalent to combustion turbine MACT limit (not an applicable standard for this project) of 091 ppmvd at 15% O_2.

TABLE A-6
VARIATION OF COOLING TOWER PM, PM_{10}, AND $PM_{2.5}$ EMISSION RATES WITH TOTAL DISSOLVED SOLIDS (TDS) CONTENT

TDS (ppmw)	PM Emission Rate (lb/hr)	Percent of Emissions < or = PM10 %	Percent of Emissions < or = PM2.5 %	PM10 Emissions (lb/hr)	PM2.5 Emissions (lb/hr)
1000	0.701	82.04	0.30	0.575	0.0021
1739	1.218	68.60	0.22	0.836	0.0027
2000	1.401	63.50	0.21	0.890	0.0029
3000	2.102	50.00	0.20	1.051	0.0042
4000	2.802	38.33	0.20	1.074	0.0056
5000	3.503	29.97	0.18	1.050	0.0063
6000	4.203	23.59	0.15	0.992	0.0063
7000	4.904	18.20	0.14	0.893	0.0069
8000	5.604	13.57	0.12	0.761	0.0067
9000	6.305	9.65	0.11	0.608	0.0069
10000	7.006	6.28	0.10	0.440	0.0070

Tower Circulation Rate (GPM)	Drift Rate %
140,000	0.001

Calculated PM10 % < or = PM10 %	Calculated PM2.5 % < or = PM2.5 %
82.04	0.298
68.60	0.217
63.50	0.213
50.00	0.204
38.33	0.197
29.97	0.177
23.59	0.155
18.20	0.137
13.57	0.123
9.65	0.110
6.28	0.100

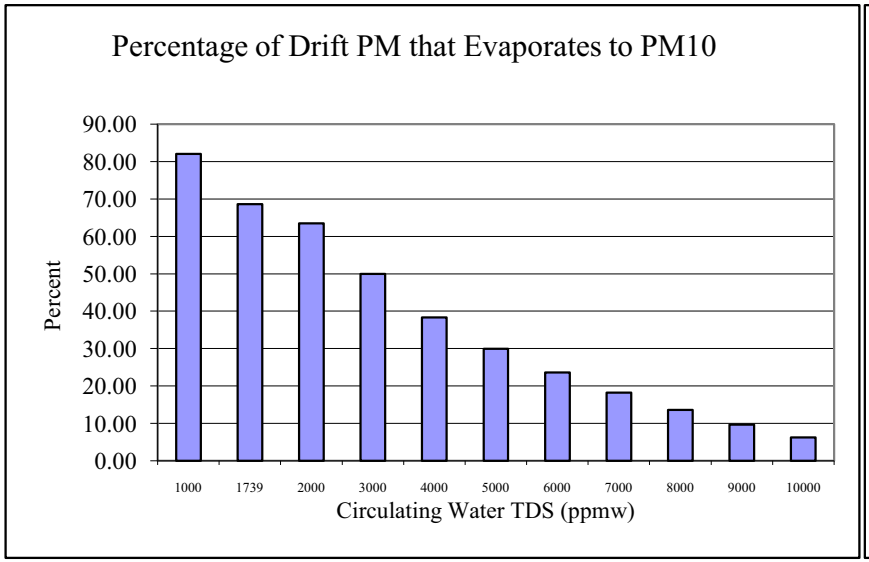

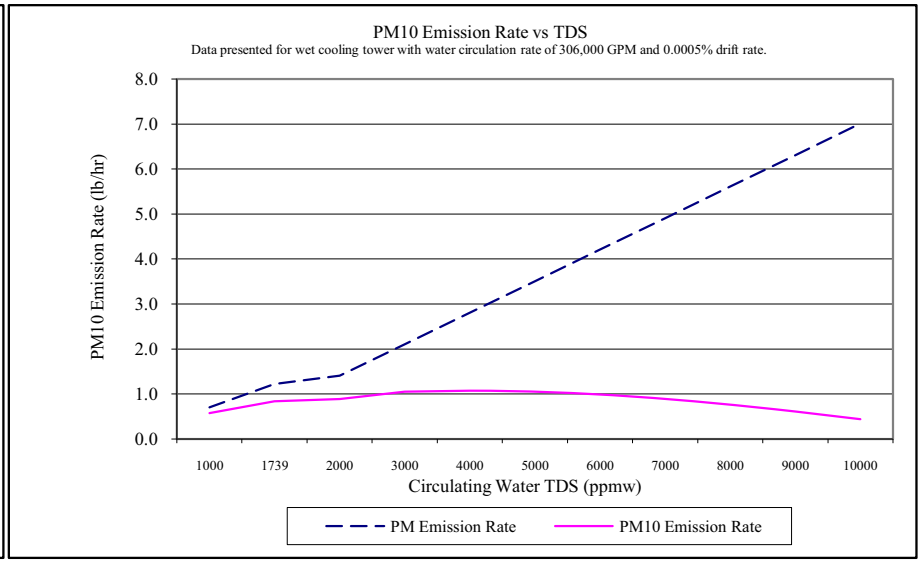

TABLE A-7
RESULTANT SOLID PARTICULATE SIZE DISTRIBUTION (TDS = 1,739 PPMW)

EPRI Droplet Diameter (um)	Droplet Volume (um3)	Droplet Mass (ug)	Particulate Mass (Solids) (ug)	Solid Particulate Volume (um3)	Solid Particulate Diameter (um)	EPRI % Mass Smaller
10	523.6	5.24E-04	9.11E-07	0.41	0.925	0.000
20	4188.8	4.19E-03	7.28E-06	3.31	1.849	0.196
30	14137.2	1.41E-02	2.46E-05	11.17	2.774	0.226
40	33510.3	3.35E-02	5.83E-05	26.49	3.698	0.514
50	65449.8	6.54E-02	1.14E-04	51.74	4.623	1.816
60	113097.3	1.13E-01	1.97E-04	89.40	5.548	5.702
70	179594.4	1.80E-01	3.12E-04	141.96	6.472	21.348
90	381703.5	3.82E-01	6.64E-04	301.72	8.321	49.812
110	696910.0	6.97E-01	1.21E-03	550.88	10.171	70.509
130	1150346.5	1.15E+00	2.00E-03	909.30	12.020	82.023
150	1767145.9	1.77E+00	3.07E-03	1396.85	13.869	88.012
180	3053628.1	3.05E+00	5.31E-03	2413.75	16.643	91.032
210	4849048.3	4.85E+00	8.43E-03	3832.95	19.417	92.468
240	7238229.5	7.24E+00	1.26E-02	5721.49	22.191	94.091
270	10305994.7	1.03E+01	1.79E-02	8146.42	24.964	94.689
300	14137166.9	1.41E+01	2.46E-02	11174.79	27.738	96.288
350	22449297.5	2.24E+01	3.90E-02	17745.15	32.361	97.011
400	33510321.6	3.35E+01	5.83E-02	26488.39	36.984	98.340
450	47712938.4	4.77E+01	8.30E-02	37714.91	41.607	99.071
500	65449846.9	6.54E+01	1.14E-01	51735.13	46.231	99.071
600	113097335.5	1.13E+02	1.97E-01	89398.30	55.477	100.000

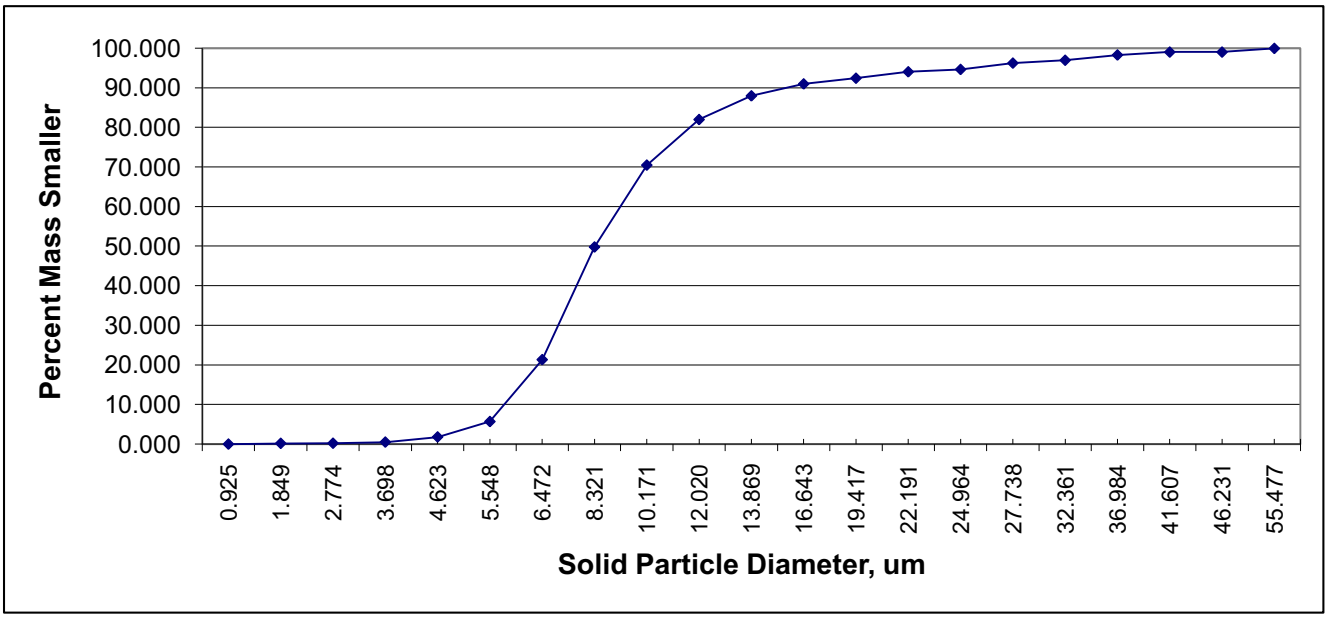

SIEMENS

Live Oaks

Estimated SGT6-5000F(4) Gas Turbine Performance
Combined Cycle / Dry Low NO_x Combustor
SGen6-1000A (Static) / 0.85 Power Factor

Based on Live_Oaks_Csheet_Rev1
July 28, 2008

SITE CONDITIONS:	CASE 1	CASE 2	CASE 3	CASE 4	CASE 5	CASE 6	CASE 7	CASE 8	CASE 9	CASE 10	CASE 11	CASE 12	CASE 13	CASE 14	CASE 15	CASE 16	CASE 17
FUEL TYPE	Natural Gas	Natural Gas	Natural Gas	Natural Gas	Natural Gas	Natural Gas	Natural Gas	Natural Gas	Natural Gas	Natural Gas	Natural Gas	Natural Gas	Natural Gas	Natural Gas	Natural Gas	Natural Gas	Natural Gas
LOAD LEVEL	PWR AUG	BASE	BASE	BASE	75%	50%	75%	50%	75%	50%	BASE	70%	50%	70%	50%	70%	50%
NET FUEL HEATING VALUE, Btu/lb_m (LHV)	20,982	20,982	20,982	20,982	20,982	20,982	20,982	20,982	20,982	20,982	20,982	20,982	20,982	20,982	20,982	20,982	20,982
GROSS FUEL HEATING VALUE, Btu/lb_m (HHV)	23,299	23,299	23,299	23,299	23,299	23,299	23,299	23,299	23,299	23,299	23,299	23,299	23,299	23,299	23,299	23,299	23,299
AMBIENT DRY BULB TEMPERATURE, °F	95.0	95.0	59.0	20.0	95.0	95.0	59.0	59.0	20.0	20.0	95.0	95.0	95.0	59.0	59.0	20.0	20.0
AMBIENT WET BULB TEMPERATURE, °F	82.7	82.7	51.5	18.7	82.7	82.7	51.5	51.5	18.7	18.7	82.7	82.7	82.7	51.5	51.5	18.7	18.7
AMBIENT RELATIVE HUMIDITY, %	60	60	60	80	60	60	60	60	80	80	60	60	60	60	60	80	80
AMBIENT PRESSURE, psia	14.683	14.683	14.683	14.583	14.683	14.583	14.683	14.683	14.583	14.583	14.683	14.683	14.683	14.683	14.683	14.583	14.583
COMPRESSOR INLET TEMPERATURE, °F	84.5	95.0	59.0	20.0	95.0	95.0	59.0	59.0	20.0	20.0	84.5	95.0	95.0	59.0	59.0	20.0	20.0
EVAPORATIVE COOLER STATUS / EFFECTIVENESS, %	85	OFF	OFF	OFF	OFF	OFF	OFF	OFF	OFF	OFF	85	OFF	OFF	OFF	OFF	OFF	OFF
INLET PRESSURE LOSS, in. H_2O (Total)	3.7	3.6	4.1	4.5	2.5	1.7	2.8	1.9	3.0	1.9	3.7	2.4	2.0	2.6	2.2	2.8	2.3
EXHAUST PRESSURE LOSS, in. H_2O (Total)	22.2	19.6	23.1	26.5	14.0	9.4	16.2	10.7	18.0	11.8	20.6	13.0	11.1	15.0	12.8	16.7	14.2
EXHAUST PRESSURE LOSS, in. H_2O (Static)	20.0	17.6	20.7	23.7	12.6	8.4	14.5	9.6	16.2	10.6	18.5	11.7	10.0	13.5	11.5	15.0	12.7
INJECTION FLUID	Steam	---	---	---	---	---	---	---	---	---	---	---	---	---	---	---	---
INJECTION RATIO	1.40	---	---	---	---	---	---	---	---	---	---	---	---	---	---	---	---
	PWR AUG																
GAS TURBINE PERFORMANCE:																	
GROSS POWER OUTPUT, kW	198,204	170,938	197,220	222,691	128,204	85,469	147,914	98,609	167,018	111,345	179,196	119,657	102,562	138,054	118,331	155,884	133,614
GROSS EFFICIENCY, % (LHV)	37.85	36.03	37.55	38.48	33.42	29.11	35.13	30.84	36.44	32.15	36.48	32.75	31.14	34.48	32.90	35.76	34.21
GROSS HEAT RATE, Btu/kWh (LHV)	9,015	9,470	9,087	8,866	10,209	11,722	9,712	11,065	9,364	10,612	9,353	10,419	10,956	9,895	10,373	9,541	9,974
GROSS HEAT RATE, Btu/kWh (HHV)	10,010	10,516	10,091	9,846	11,337	13,017	10,785	12,288	10,399	11,784	10,386	11,570	12,166	10,988	11,518	10,594	11,076
FUEL FLOW, lbm/hr	85,157	77,155	85,419	94,104	62,382	47,749	68,467	52,006	74,542	56,316	79,884	59,421	53,557	65,105	58,500	70,883	63,518
INJECTION RATE, lb_m/hr	119,202	---	---	---	---	---	---	---	---	---	---	---	---	---	---	---	---
HEAT INPUT, MMBtu/hr (LHV)	1,787	1,619	1,792	1,974	1,309	1,002	1,437	1,091	1,564	1,182	1,676	1,247	1,124	1,366	1,227	1,487	1,333
HEAT INPUT, MMBtu/hr (HHV)	1,984	1,798	1,990	2,193	1,453	1,113	1,595	1,212	1,737	1,312	1,861	1,384	1,248	1,517	1,363	1,651	1,480
EXHAUST TEMPERATURE, °F	1,130	1,141	1,102	1,076	1,141	1,141	1,102	1,102	1,076	1,076	1,132	1,141	1,141	1,102	1,102	1,076	1,076
EXHAUST FLOW, lb_m/hr	3,827,580	3,610,849	3,994,809	4,338,117	3,030,900	2,474,143	3,319,026	2,691,701	3,542,958	2,860,075	3,706,524	2,919,150	2,698,140	3,190,738	2,940,467	3,407,906	3,131,626
EXHAUST GAS COMPOSITION (% BY VOLUME):																	
OXYGEN	10.97	12.18	12.57	12.58	12.47	12.95	12.86	13.35	12.83	13.34	12.05	12.56	12.74	12.94	13.13	12.92	13.11
CARBON DIOXIDE	3.77	3.70	3.73	3.79	3.56	3.35	3.60	3.38	3.68	3.45	3.72	3.52	3.44	3.56	3.48	3.64	3.55
WATER	15.62	10.52	8.35	7.76	10.26	9.83	8.09	7.65	7.54	7.08	10.92	10.18	10.01	8.02	7.84	7.46	7.29
NITROGEN	68.83	72.76	74.48	74.98	72.86	73.02	74.57	74.75	75.07	75.25	72.46	72.88	72.95	74.60	74.67	75.10	75.17
ARGON	0.81	0.85	0.87	0.88	0.85	0.86	0.87	0.88	0.88	0.88	0.85	0.85	0.86	0.87	0.88	0.88	0.88
MOLECULAR WEIGHT	27.59	28.14	28.38	28.45	28.16	28.18	28.40	28.43	28.46	28.49	28.10	28.16	28.17	28.40	28.41	28.47	28.48
NET EMISSIONS (Based on USEPA Test Methods):																	
NO_x, ppmvd @ 15% O_2	25	25	25	25	25	45	25	45	25	45	25	25	25	25	25	25	25
NO_x, lb_m/hr as NO2	186	168	186	205	136	187	149	204	162	221	174	129	117	142	127	154	138
CO, ppmvd @ 15% O_2	10	10	10	10	10	400	10	400	10	400	10	10	40	10	40	10	40
CO, lb_m/hr	45	41	45	50	33	1,012	36	1,102	40	1,194	42	32	114	35	124	38	135
VOC, ppmvd @ 15% O_2	1	1	1	1	1	70	1	70	1	70	1	1	3	1	3	1	3
VOC, lb_m/hr as CH_4	2.6	2.3	2.6	2.9	1.9	101	2.1	110	2.3	120	2.4	1.8	4.9	2.0	5.3	2.2	5.8
PARTICULATES, lb_m/hr	8	8	8	9	8	8	8	8	8	8	8	8	8	8	8	8	8

NOTES:

- All data is estimated and not guaranteed.
- Performance is based on new and clean condition.
- Gross power output is at the generator terminals, minus excitation losses. It does not include ECONOPAC™ auxiliary load losses.
- Estimated GT Performance values are dependent upon receiving test tolerances equal to measurement uncertainty calculated in accordance with ASME PTC 19.1-2005.
- Gas fuel composition (% by volume) is: 98 CH_4, 0.5 C_2H_6 and 1.4 N_2.
- Gas fuel must be in compliance with the Siemens Gas Fuel Specification.
- Average temperature of the gas fuel is 375 °F.
- Sensible Heat of the fuel is not included in the calculated Heat Input values.
- Injection is for power augmentation and not for NO_x control.
- Emissions flow rates are calculated based on the maximum achievable exhaust flow. For further details on flow rate calculation contact Siemens.
- VOC consist of total hydrocarbons excluding methane and ethane and are expressed in terms of methane (CH_4).
- Particulates are per US EPA Method 5/202 (front and back half).
- Emissions exclude ambient air contributions.
- Please be advised that the information contained in this transmittal has been prepared and is being transmitted per customer request specifically for information purposes only. Such information is not intended to be used for evaluation of plant design and/or performance relative to contractual commitments. Data included in any permit application or Environmental Impact Statement are strictly the customer's responsibility. Siemens is available to review permit application data upon request.

APPENDIX B

AIR QUALITY MODELING PROTOCOL DOCUMENTS

Golder Associates Inc.

6241 NW 23rd Street, Suite 500
Gainesville, FL 32653-1500
Telephone (352) 336-5600
Fax (352) 336-6603

September 4, 2008 Project No. 073-3618-07

Georgia Department of Natural Resources
Environmental Protection Division- Air Protection Branch
4244 International Parkway, Suite 120
Atlanta, Georgia 30354

Attn: Mr. Peter Courtney

RE: AIR MODELING PROTOCOL FOR ASSESSING POLLUTANT AND AQRV IMPACTS FOR THE LIVE OAKS POWER PROJECT IN STERLING, GEORGIA

Dear Mr. Courtney:

On behalf of Live Oaks Company, LLC ("Live Oaks"), Golder Associates Inc. ("Golder") is submitting this air modeling protocol which details the air modeling methodologies to be used for the re-permitting of the Live Oaks Power Project (the "Project"), a combined cycle power production facility located in Sterling, Georgia.

The air permitting analyses are specified in the New Source Review (NSR) requirements under the Prevention of Significant Deterioration (PSD) regulations. The protocol is designed to enlist the most current, accepted air modeling techniques and methodologies for predicting both near-field and far-field pollutant concentrations and to help ensure that the air modeling analyses will be conducted in a manner that is consistent with the Georgia Department of Natural Resources, Environmental Protection Division (GEPD) requirements, as well as those of the Federal Land Managers (FLM) for affected PSD Class I areas.

The key features of the air modeling analyses are included in the following sections.

BACKGROUND

Live Oaks submitted the initial PSD permit application to the GEPD for the Project in November 2001, and the final Air Quality Permit was issued on February 4, 2004. On June 30, 2005, Live Oaks requested an extension of the construction commencement and construction completion dates as prescribed in the Air Quality Permit. On October 24, 2007, the GEPD granted an amendment extending the construction commencement to August 4, 2008 and the completion of construction deadline to February 4, 2011.

As of August 4, 2008, Live Oaks had not begun construction at the site. Accordingly, Live Oaks is submitting a new Air Quality Permit application for the Project. Although the scope of the Project will be substantially the same, Live Oaks is submitting a new permit application rather than requesting an additional extension due to several factors, including:

i. The amount of time that has elapsed since the original permit application was submitted and the need to incorporate any updates and/or revisions to the Air Quality Permit modeling requirements;

ii. The necessity to incorporate revised performance and emission characteristics of the major equipment due to advancements in equipment design; and,

iii. Recent discussions with your office regarding the GEPD's recommendations and requirements.

PROJECT DESCRIPTION AND LOCATION

Live Oaks is proposing to construct and operate a gas-fired combined cycle power production facility in Glynn County, Georgia. The Project will produce approximately 600 megawatts (MW) of electricity for sale to wholesale customers (such as utilities, municipalities, electric cooperatives, and power marketers). The Project is located approximately 5 miles west of I-95 on a 90-acre undeveloped parcel in the Sterling Industrial Park on Green Swamp Road. The site is zoned for General Industrial use, adjoins the Georgia Power West Brunswick/Highway 99 230/115-kilovolt (kV) substation, is bordered by a 115-kV/230-kV transmission easement to the west, a Norfolk Southern Railroad line to the east, and several industrial complexes to the south. The Project will interconnect to the Georgia Integrated Transmission System at the Georgia Power West Brunswick/Hwy 99 230-kV substation.

The combined cycle plant consists of two combustion turbines (CTs), generating approximately 170 MW each, two heat recovery steam generators (HRSG) with duct firing, and one steam turbine generating approximately 260 MW. The CTs and duct burners will be fired only by pipeline-quality natural gas. A cooling tower will be installed to provide cooling water to the condensing steam turbine. Additional equipment includes an emergency generator; a fuel gas heater; ammonia handling facility for the selective catalytic reduction (SCR) system; various pumps, including an emergency firewater pump; and a gas metering station.

The Project will be located in Glynn County which has been designated by the U.S. Environmental Protection Agency (EPA) and GEPD as an attainment area for all criteria pollutants [i.e., sulfur dioxide (SO_2), nitrogen dioxide (NO_2), carbon monoxide (CO), particulate matter (PM) with aerodynamic diameter of 10 microns or less (PM_{10}), PM with aerodynamic diameter of 2.5 microns or less ($PM_{2.5}$), ozone, and lead (Pb)]. Glynn County and surrounding counties are designated as PSD Class II areas.

As a result, the Project's emissions will be reviewed following the NSR procedures for attainment areas under the PSD regulations for applicable pollutants, such as SO_2, nitrogen oxides (NO_x), CO, PM_{10}, $PM_{2.5}$, volatile organic compounds (VOC) (as a precursor to ozone) and Pb.

The proposed Project will result in emissions increases above the EPA significant emission rates (SER) for the following pollutants, thereby requiring PSD review for each pollutant:

- SO_2 – 42 tons per year (TPY);
- NO_X – 186 TPY;
- PM – 98 TPY;
- PM_{10} – 93 TPY;
- $PM_{2.5}$ – 93 TPY;
- CO – 98 TPY;
- SAM – 8.4 TPY; and
- VOC – 37 TPY.

These annual emissions estimates are based on the steady-state operation of the CTs and include two CT/HRSGs, a cooling tower, an emergency generator, a fire water pump, and a natural gas heater. Emissions estimates including emissions during the startup and shutdown events of the CTs will be provided in the permit application. The annual estimates are also based on 8,760 hours of annual operation including 4,000 hours of duct-firing and 500 hours of operation at 75-percent load. Live

Oaks may decide to operate at 60-percent load, in which case the NO_x, CO, and VOC annual emissions will be updated appropriately.

The maximum short-term emissions in pounds per hour (lb/hr) for different emission units of the Project are presented below:

	SO_2	PM_{10}	NO_x	CO	SAM
Per CT/HRSG	5.5	11.4	22.6	13.4	1.14
Cooling Tower	--	1.45	--	--	--
Heater	0.056	0.061	2.36	1.79	--

Note: CT/HRSG lb/hr rates are for CT loads of 75 percent or higher.

As required under PSD regulations, a best available control technology (BACT) evaluation will be performed based on more recent BACT evaluations that have been conducted for other similar projects since the initial permitting of the facility in 2004. The BACT evaluation will be conducted using the currently mandated "top-down" approach. The EPA BACT/RACT/LAER Clearinghouse will be reviewed to identify BACT technologies and emission limits for similar sources. Alternative control technologies will be identified and assessed as to their technical feasibility. For technically feasible alternatives, capital and operating costs will be determined, and control effectiveness in terms of dollars-per-ton-of-pollutant controlled will be developed.

The proposed emission controls for NO_x emissions for the CTs include the use of dry low NOx (DLN) combustors and SCR system. Low-NO_x burners and SCR are proposed as controls for the duct burners. The NO_x concentrations from these sources are proposed to be 2.5 parts per million, by volume dry (ppmvd), corrected to 15-percent oxygen (O_2) including duct firing in the HRSG. VOC and CO concentrations may be controlled using an oxidation catalyst. The proposed emission rates for PM, PM_{10}, and $PM_{2.5}$ are based on good combustion practices utilizing the DLN combustor and firing pipeline quality natural gas fuel. The proposed emission rates for SO_2 and SAM are based on the use of pipeline quality natural gas.

Based on recent NSR regulations for $PM_{2.5}$, effective July 15, 2008, emissions of precursor pollutants are also used to evaluate pollutant applicability as well as emission controls. These precursor pollutants include SO_2 and other pollutants that the state may determine contribute to $PM_{2.5}$. These other pollutants include NO_x, VOC, and ammonia.

The information presented in this modeling protocol includes the air modeling procedures and assumptions needed to address air quality impacts under the PSD regulations.

PROJECT MODELED EMISSIONS

The Project's CTs will be modeled for a range of operating loads (e.g., 75 and 100 percent) and for ambient temperatures of 20, 59, and 95 degrees Fahrenheit (^oF). Duct-firing will also be modeled with 100-percent operating load for ambient temperatures of 59 and 95^oF.

The fuel gas heater will also be modeled with the CT emissions since the fuel heater can operate all year. PM emissions from the cooling tower will be included when modeling the Project for PM impacts. Because the emergency generator and emergency firewater pump will operate for 500 hours per year or less, the pollutant emissions from these sources will be low and, therefore, the impacts from these sources are expected to be negligible. As a result, these sources will not be included in the modeling.

BUILDING DOWNWASH CONSIDERATIONS

The proposed stacks for the Project sources will be evaluated for determining compliance with Good Engineering Practice (GEP) regulations and the potential influence of nearby buildings and structures that could cause building downwash. For each stack that is below the GEP height, direction-specific building heights and maximum projected widths will be determined using the Building Profile Input Program (BPIP, Version 04274) which incorporates the Plume Rise Model Enhancement (PRIME) downwash algorithm developed by the Electric Power Research Institute (EPRI). The direction-specific building information output by BPIP will be input to the air dispersion model for processing.

DISPERSION MODELING – PSD CLASS II AREAS

The air modeling analysis for the PSD Class II areas (near-field modeling) will be performed using the American Meteorological Society (AMS)/EPA Regulatory Model (AERMOD, Version 07026) to predict concentrations in the vicinity of the proposed Project site location. The near-field analysis is based on predicting impacts within 50 km from the Project. The EPA regulatory default options will be used to predict all maximum impacts. These options include:

- Final plume rise at all receptor locations
- Stack-tip downwash
- Buoyancy-induced dispersion
- Default wind speed profile coefficients
- Default vertical potential temperature gradients
- Calm wind processing

Meteorological Data

The meteorological data to be used for the near-field analysis consists of a 5-year hourly record consisting of surface and upper air data from the National Weather Service (NWS) stations in Savannah and Charleston, South Carolina, respectively, for years 1990 to 1994. Recent communications with GEPD has indicted that use of this meteorological record would be considered suitable for sources located in Glynn County. These data will be processed using the AERMOD meteorological pre-processor program AERMET (Version 06340).

Monthly land use values of surface roughness, Bowen Ratio and albedo will be provided by GEPD using procedures outlined in the most recent regulatory guidance presented in the AERMOD Implementation Guide (revised January 9, 2008). Output from EPA's AERSURFACE tool will provide the monthly land use parameter values for up to 12 wind direction sectors that will be used for input to AERMET Stage 3.

Receptors

Receptors will be placed along the Project site's restricted property boundary (i.e., fenceline) and beyond the fenceline according to the following receptor spacing.

- Along the property boundary or fenceline – 50 meter (m)
- Beyond the fenceline to 2 km – 100 m
- From 2 km to 5 km – 250 m
- From 5 km to 7 km – 500 m, and
- From 7 km to 10 km – 1,000 m

All maximum predicted concentrations will be obtained from a receptor grid comprised of 50-m resolution on the fence line and 100-m resolution or less beyond the fence line. AERMOD's terrain

preprocessing program, AERMAP, Version 06341, will be used to process the receptor grid data in all near-field areas, using 7.5-minute U.S. Geological Survey (USGS) Digital Elevation Model (DEM) files.

For a detailed modeling analysis, if required, the receptor grid will extend from the fence line to the significant impact distance on a pollutant-specific basis.

Significant Impact Analysis

A significant impact analysis will be performed for the Project's emissions based on the CT emission scenarios for the range of operating loads and ambient temperatures, described previously, with the fuel heater. If the highest predicted impact for a particular pollutant exceeds the PSD Class II significant impact levels (SIL), a more detailed modeling analysis will be performed for that pollutant. The critical load and temperature will then be used in the detailed analysis with other background facilities as discussed in the following sections.

Detailed Impact Modeling Analyses

If the highest predicted impact for a particular pollutant exceeds the SIL, pollutant-specific analyses will be performed to demonstrate compliance with National Ambient Air Quality Standards (AAQS) and with the allowable PSD Class II Increments. The AAQS analysis will include the Project along with background facility emission data and a non-modeled background concentration for comparison to the AAQS. In the PSD Class II increment analysis, PSD increment consuming and expanding sources will be modeled for comparison to the allowable PSD Class II increments.

Background AAQS and PSD increment-affecting sources for those pollutants will be requested from GEPD. In addition, emissions and stack parameters for facilities will be developed from information contained in previous air modeling reports or from other data sources (e.g., Title V Permit Applications).

Background sources located within the significant impact area (SIA), the modeling area, will be included in the modeling. Background sources located 50 km beyond the modeling areas, referred to as the screening area, will also be considered.

To reduce the number of background sources to be evaluated in the screening area, the "Screening Threshold" method developed by the North Carolina Department of Natural Resources and Community Development will be used. Based on this technique, facilities whose annual emissions (i.e., ton per year) are less than the threshold quantity, Q, are eliminated from the modeling analysis. Q is equal to 20 x (D-SIA), where D is the distance in km from the facility to the Project site and SIA is the distance of the Project's pollutant-specific SIA. The facilities that are not eliminated in the screening analysis will be included in the AAQS and PSD Class II analyses.

Facilities with large emission rates, such as greater than 1,000 TPY, which are located beyond the screening area and up to 100 km will also be included in the analysis. In addition, total emission from the facilities that are located very close to one another will be compared using the North Carolina method to include the emissions from the closely located facilities in the modeling analysis.

Toxic Air Pollutants

Air quality impacts for toxic air pollutants emitted by the Project will be also assessed by following the Georgia DNR procedures in Guideline for Ambient Impact Assessment of Toxic Air Pollutant Emissions (Revised 2007). AERMOD will be used to provide maximum concentrations for the annual, 24-hour, and 1-hour averaging times. These concentrations will then be compared to the latest Acceptable Ambient Concentrations (AAC) available from GEPD.

DISPERSION MODELING – PSD CLASS I AREAS

The only two PSD Class I areas located within 200 km of the site are the Wolf Island National Wilderness Area (WNWA) and the Okefenokee NWA (ONWA), located about 30 and 70 km, respectively, from the Project site.

AERMOD will also be used to predict impacts at the Wolf Island NWA located about 30 km from the Project site since this model is recommended for estimating impacts within 50 km of a source. The modeling assumptions for AERMOD will be the same as those described for addressing impacts in the PSD Class II areas

The CALPUFF air modeling system (Version 5.8) will be used to predict the Project's maximum air quality concentrations at the Okefenokee NWA since this model is recommended for estimating impacts beyond 50 km from a source. CALPUFF is a non-steady state Lagrangian puff long-range transport model that includes algorithms for chemical transformations (important for visibility controlling pollutants), and wet/dry deposition. CALPUFF will be used in a manner that is consistent with methodologies recommended in the following documents and previous discussions with the NPS.

- FLMs' AQRV Workgroup (FLAG) guidance document, finalized in December 2000 and revised in June 2008, referred to as the FLAG Phase I Report; and
- Interagency Workgroup on Air Quality Models (IWAQM) Phase 2 Summary Report and Recommendations for Modeling Long-Range Transport Impacts (EPA, 1998), referred to as the IWAQM Phase 2 report.

Meteorological Data
At the Wolf Island NWA, the air modeling analyses will be conducted using the meteorological data with AERMOD as described for addressing impacts in the PSD Class II areas.

At the Okefenokee NWA, the air modeling analyses will be conducted using the latest meteorological and geophysical databases which have been developed for use with the most recent versions of CALPUFF. These datasets were developed using CALMET Version 5.8 and were originally developed by VISTAS and recompiled for Version 5.8 by the FLM. The domain has 4-km spacing and covers the period from 2001 to 2003.

Parameter Settings
For the addressing impacts in WNWA, parameter settings to be used in AERMOD will the same as described for addressing impacts in the PSD Class II areas.

For the addressing impacts in ONWA, parameter settings to be used in CALPUFF will be based on the latest regulatory guidance. Where the modeling guidance recommends regulatory model defaults, those defaults will be used. For ozone background concentrations, observed hourly ozone data for 2001 through 2003 from CASTNET and AIRS stations will be used. These data are available from the TRC website. A fixed monthly ammonia background concentration of 0.5 parts per billion (ppb) will be used. Parameters will be set to generate an hourly relative humidity file (for future post-processing for visibility with CALPOST visibility method number 2), calculate wet and dry (i.e., total) fluxes and concentrations.

Project Modeled Emissions
The Project's emission, stack, and operating data as well as building dimensions will be modeled for the emission sources. This will include the CTs and fuel gas heater operating under normal

operations. The CT emissions and stack parameters used for the far-field analysis will be from the load and ambient temperature that produces the highest CT emission rate. This will likely occur during base load and ambient temperature of 20°F.

For CALPUFF modeling, PM emissions for the proposed Project will be speciated into filterable and condensable components and into 6 particle size categories. The effect that each species has on visibility impairment is related to a parameter called the extinction coefficient. The higher the extinction coefficient, the greater is that species' effect on visibility. Filterable PM is speciated into coarse (PMC), fine (PMF), and elemental carbon (EC). The default extinction efficiencies for these species are 0.6, 1.0, and 10.0, respectively. PMC is PM with aerodynamic diameters greater than 2.5 microns. Both EC and PMF have aerodynamic diameters equal to or less than 2.5 microns. Condensable PM is comprised of sulfate (SO4) and secondary organic aerosols (SOA). The extinction efficiencies for these species are 3 x f(RH) and 4, respectively, where f(RH) is the relative humidity factor.

The PM group will then be speciated into filterable and condensable species using the POSTUTIL utility program. Note that emissions for condensable inorganic PM are input directly to CALPUFF as SO_4.

PM speciation (PM_{10} versus $PM_{2.5}$) will be developed based on the best available vendor information for the Project's emission sources.

Receptors

The FLM has developed receptors to represent the boundary and internal areas of the two PSD Class I areas. There are 30 receptors within the WNWA and 500 receptors within the ONWA. Additional receptors will be developed, as needed, to evaluate the proposed Project's impact on other areas of interest.

Significant Impact Analysis

Significant impact analyses will be performed to assess the Project's impacts at the PSD Class I areas. The maximum predicted SO_2, NO_2, and PM_{10} concentrations due to the Project will be compared to EPA's proposed PSD Class I significant impact levels. If the Project's impacts exceed the proposed EPA PSD Class I significant impact levels, then a more detailed PSD Class I increment analysis will be performed on a pollutant-specific basis. In the PSD Class I incremental analysis, PSD-increment affecting sources will be modeled for comparison to the allowable PSD Class I increments. The proposed PSD Class I significant impact levels are:

- SO_2: 3-hour – 1.0 µg/m^3; 24-hour – 0.2 µg/m^3; and annual average – 0.1 µg/m^3
- NO_2: annual average – 0.1 µg/m^3
- PM_{10}: 24-hour – 0.3 µg/m^3; and annual average – 0.2 µg/m^3

If a detailed PSD Class I impact assessment is required for one or more pollutants, an inventory of background PSD Class I increment-affecting sources will be developed with the assistance from the GEPD.

Visibility

For the Wolf Island NWA, visibility impact will be assessed following the "Near Field Analysis Technique for Analyzing Plumes or Layers Viewed Against a Background" from the revised FLAG document because the Project is within 50 km of the PSD Class I area. As recommended, the potential plume impacts will be first modeled using the screening model, VISCREEN. If the next level of analysis is needed, after discussion with the FLM for the Class I area, the PLUVUE II model

will be used. Both of these models are steady-state Gaussian plume models and calculate 1-hour concentrations within an elevated plume.

Visibility impacts are determined using two parameters:

- Contrast of a plume against a viewing background such as the sky or a terrain feature, and
- Perceptibility of a plume on the basis of the color difference between the plume and the viewing background (Delta E, ΔE).

Values of ΔE and plume contrast are based on the concentrations of fine particulates (including sulfates), NO_2, and the geometry of the observer, target, plume, and the position of the sun. PLUVUE II also allows consideration of the effects of secondary formed sulfates. The critical values for contrast and Delta E are 0.05 and 2.00, respectively.

VISCREEN will be applied in two successive levels of screening (i.e., referred to as Levels 1 and 2) without the need for extensive source, meteorological, or pollutant input.

The Level 1 screening analysis is designed to provide a conservative estimate of plume visual impacts (i.e., impacts that would be larger than those calculated with more realistic input and modeling assumptions). This analysis assumes worst-case meteorological conditions of stable stability (Pasquill-Gifford stability class F) and a 1 m/s wind speed persisting for 12 hours in one direction towards a PSD Class I area. The input required for the Level 1 analysis is limited to the following parameters:

- Emission rates of PM_{10} and NO_x;
- Distance between the emission source and (a) the observer; (b) the closest Class I area boundary; and (c) the most distant Class I area boundary;
- Background visual range that is representative of natural conditions for the Class I area being evaluated; and
- If available, emission rates of NO_2, soot, and primary sulfate.

The terrain between the Project site and WNWA and within the WNWA can be considered as generally flat. With no terrain feature that can be used as a viewing background, the visibility impacts will be determined using the sky as the only viewing background. It should also be noted that these critical visual impacts are estimated for locations inside of the Class I area. Since no integral vistas have been identified for the WNWA, this evaluation will not evaluate vistas located outside the Class I area.

If these levels are not exceeded by the proposed source, the source is considered to pass the Level 1 visibility analysis, and the source will not have a significant impact on the Class I area.

If the Project's impacts are calculated to exceed the Level 1 visibility screening criteria, a Level 2 screening analysis will be performed. One of the main differences in input between the Level 1 and Level 2 analyses is the meteorology assumed for plume transport and dispersion patterns. In Level 2 analysis, more realistic input representative of the given source and the Class I area is provided.

The Level 2 screening analysis is designed to account for more realistic occurrences of meteorological conditions that would transport the plumes of the proposed units towards the WNWA. In this analysis, an assessment of the frequency of the wind direction, wind speed, and atmospheric

stability classes is made to determine the frequency of conditions that are most likely to cause a potentially adverse plume visual impact.

The first step in the analysis is to construct a table that shows worst-case dispersion conditions ranked in order of decreasing severity and the frequency of occurrence of these conditions associated with the wind direction that could transport emissions toward the WNWA. Dispersion conditions are ranked by evaluating the product of the horizontal dispersion parameter (called sigma y) times the vertical dispersion parameter (called sigma z) times the wind speed. Sigma y and sigma z account for the amount of plume spreading or dispersion that will occur as a plume travels away from a source for a given stability class. The dispersion conditions are then ranked in ascending order of the value of the dispersion product term (i.e., sigma y times sigma z times the wind speed).

To obtain the worst-case meteorological conditions, it is necessary to determine the dispersion conditions that have a dispersion product term with a cumulative probability of 1 percent. Thus, the dispersion condition is selected to address potential plume visual impacts such that the sum of all frequencies of occurrence worse than this condition totals 1 percent (i.e., about 4 days per year). The 1-percentile meteorology is assumed to be worst-case plume visual impacts when the probability of worst-case meteorology conditions is coupled with the probability of other factors being ideal for maximizing plume visual impacts. Dispersion conditions associated with transport times of more than 12 hours are not considered in this cumulative frequency.

For this study, the surface meteorological data from the NWS station in Savannah will be used to generate a frequency distribution of wind direction, wind speed, and stability occurrences based on the standardized stability array (STAR) program used for many air dispersion model applications. The STAR program generates frequencies using 16 wind direction classes with each class covering a 22.5-degree sector, 6 wind speed classes, and 6 stability classes.

If the screening analyses demonstrate that the criteria are exceeded, detailed analyses to ascertain the magnitude, frequency, location, and timing of plume visual impacts would be required and discussed with the FLM for the PSD Class I area. FLM for the Class I area will be contacted to discuss the need to conduct the Level 3 refined analysis using the PLUVUE II model.

For the ONWA, CALPUFF will be used to calculate visibility because the Project is more than 50 km from this PSD Class I area. The Project's impact on regional haze will be compared with the allowable visibility impairment criteria of 5 percent of the average background visual range of the top 5-percent-visibility days.

Based on the FLAG document, current regional haze guidelines characterize a change in visibility by the change in the light-extinction coefficient (bext). The bext is the attenuation of light per unit distance due to the scattering and absorption by gases and particles in the atmosphere. A change in the extinction coefficient produces a perceived visual change. An index that simply quantifies the percent change in visibility due to the operation of a source is calculated as follows:

$$\Delta\% = (bexts / bextb) \times 100$$

where: bexts is the extinction coefficient calculated for the source, and
bextb is the background extinction coefficient.

The purpose of the visibility analysis is to calculate the extinction at each receptor for each day (24-hour period) of the year due to the Project emissions.

The CALPUFF postprocessor model CALPOST will be used to calculate the combined visibility effects from the different pollutants that are emitted from the proposed Project. Based on communications with the FLM, daily background extinction coefficients are to be calculated using both Method 2 and Method 6. With Method 2 (i.e., the FLAG method), background extinction coefficients are calculated on an hour-by-hour basis using hourly relative humidity data from CALMET and hygroscopic and non-hygroscopic extinction components specified in the FLAG document. With Method 6, background extinction coefficients are calculated using monthly relative humidity factors provided in Table A2 of the document entitled *Guidance for Estimating Natural Visibility Conditions Under the Regional Haze Rule (EPA, 2003)*. This approach is currently recommended for sources that are affected by Best Available Retrofit Technology (BART) regulations and uses the predicted 98th percentile concentration to compare to visibility criteria. For both visibility methods, the hygroscopic and non-hygroscopic components for the ONWA are 0.9 and 8.5 inverse megameter (Mm-1), respectively. CALPOST then calculates the percent extinction change for each day of the year. A corrected Rayleigh scattering term of 11.4 Mm-1 will be used for the analysis. This value is from Table A of the document entitled, *Revised IMPROVE Algorithm for Estimating Light Extinction from Particle Speciation Data* (IMPROVE, 2005).

Sulfur and Nitrogen Deposition

Because AERMOD does not adequately address sulfur (S) or nitrogen (N) deposition, CALPUFF will be used to assess the Project's total sulfur and nitrogen deposition rates will be predicted for the Project at both PSD Class I areas. The deposition analysis criterion is based on the annual averaging period. The total deposition is estimated in units of kilogram per hectare per year (kg/ha/yr) of nitrogen or sulfur. The CALPUFF model is used to predict wet and dry deposition fluxes of various oxides of these elements.

For N deposition, the species include:

- Particulate ammonium nitrate (from species NO_3), wet and dry deposition;
- Nitric acid (species HNO_3), wet and dry deposition;
- NO_x dry deposition; and
- Ammonium sulfate (species SO_4), wet and dry deposition.

For S deposition, the species include:

- SO_2, wet and dry deposition; and
- SO_4, wet and dry deposition.

CALPUFF produces results in units of $\mu g/m^2/s$. The modeled deposition rates will be converted to N or S deposition in kg/ha respectively, by using a multiplier equal to the ratio of the molecular weights of the substances (IWAQM Phase II report Section 3.3).

Deposition analysis thresholds (DAT) for total N and S deposition of 0.01 kg/ha/yr were provided by the U.S. Fish and Wildlife Service (January 2002). A DAT is the additional amount of N or S deposition within a Class I area, below which estimated impacts from a proposed new or modified source are considered insignificant. The maximum N and S depositions predicted for the proposed Project will be compared to these DAT or significant impact levels.

The wet and dry sulfate and nitrate fluxes will be converted into total N and S fluxes using the POSTUTIL utility program.

PRECONSTRUCTION AMBIENT MONITORING ANALYSIS

In addition to comparison to the SILs, the Project's maximum pollutant impacts will also be compared to the *de minimis* air monitoring concentration to address preconstruction ambient air monitoring requirements under the PSD regulations. Should the Project's maximum pollutant impacts exceed a *de minimis* monitoring concentration, a request will be made that existing representative ambient air monitoring data be used to satisfy this requirement.

ADDITIONAL IMPACT ANALYSIS

The additional impact analyses required under PSD review include an analysis of the impacts of emissions from the Project on soils, vegetation, and visibility. The analysis of impacts due to associated growth in the area must also be addressed. To address such impacts, soil and vegetation types in the vicinity of the plant must be identified. A literature review will be conducted to identify the most recent data concerning threshold effect levels for the soil and vegetation types. An assessment of air emissions impacts upon these values will then be prepared. Growth effects will be addressed qualitatively, including impacts due to secondary emissions from the facility.

CONCLUDING REMARKS

We look forward to receiving your comments on this protocol and working with the GEPD on this important Project. If there are any questions, please contact me or Steve Marks at (352) 336-5600

Sincerely,

GOLDER ASSOCIATES INC.

Robert C. McCann, Jr.
Principal

for

Steven R. Marks, C.C.M.
Associate

SKM/nav

cc: Mr. James Capp, GEPD
Mr. Duane Cramer, Sithe Global Power LLC
Mr. Burt Wallace
Mr. Steven Moeller, GAI Atlanta

2007/OtherOffices/L090408_618.docx

APPENDIX C

GENERIC MODEL RESULTS AND INPUT FILES

CLASS 2 CT LOAD ANALYSIS

AERMOD INPUT AND SUMMARY FILE

```
CO STARTING
  TITLEONE 1991 LIVE OAKS CLASS II CT LOAD ANALYSIS, 2 NG CC CTS    10/31/08
  TITLETWO GENERIC EMISSIONS RATE (10 g/s) FOR CTS
  MODELOPT DFAULT CONC NOWARN
  AVERTIME PERIOD 24 8 3 1
  POLLUTID GEN
  RUNORNOT RUN
CO FINISHED
**
****************************************
** AERMOD Source Pathway
****************************************
**
**
SO STARTING
** Source Location **
** Source ID - Type - X Coord. - Y Coord. **
** CTA = COMBUSTION TURBINE 1
** CTB = COMBUSTION TURBINE 2
** P = WITH POWER AUGMENTATION
** 10 = BASELOAD AND 70 = 70% LOAD
** 20 = 20 DEG F, 59 = 59 DEG F, AND 95 = 95 DEG F

  LOCATION CTA1020  POINT 446874.163 3461265.046 3.000
  LOCATION CTB1020  POINT 446895.783 3461224.630 3.000

  LOCATION CTA1059  POINT 446874.163 3461265.046 3.000
  LOCATION CTB1059  POINT 446895.783 3461224.630 3.000

  LOCATION CTA1095  POINT 446874.163 3461265.046 3.000
  LOCATION CTB1095  POINT 446895.783 3461224.630 3.000

  LOCATION CTAP1095 POINT 446874.163 3461265.046 3.000
  LOCATION CTBP1095 POINT 446895.783 3461224.630 3.000

  LOCATION CTA7020  POINT 446874.163 3461265.046 3.000
  LOCATION CTB7020  POINT 446895.783 3461224.630 3.000

  LOCATION CTA7059  POINT 446874.163 3461265.046 3.000
  LOCATION CTB7059  POINT 446895.783 3461224.630 3.000

  LOCATION CTA7095  POINT 446874.163 3461265.046 3.000
  LOCATION CTB7095  POINT 446895.783 3461224.630 3.000

** Source Parameters **
**Baseload, 20 F, DB, CASE 19
  SRCPARAM CTA1020 5.0 42.67 362.2 20.70 5.95
  SRCPARAM CTB1020 5.0 42.67 362.2 20.70 5.95
**Baseload, 59 F, DB, CASE 20
  SRCPARAM CTA1059 5.0 42.67 361.0 19.07 5.95
  SRCPARAM CTB1059 5.0 42.67 361.0 19.07 5.95
**Baseload, 95 F, DB, CASE 21
  SRCPARAM CTA1095 5.0 42.67 360.4 17.37 5.95
  SRCPARAM CTB1095 5.0 42.67 360.4 17.37 5.95
**Baseload, 95 F, DB, PA, CASE 12
  SRCPARAM CTAP1095 5.0 42.67 360.9 18.78 5.95
  SRCPARAM CTBP1095 5.0 42.67 360.9 18.78 5.95
**70 % LOAD, 20 F, CASE 16
  SRCPARAM CTA7020 5.0 42.67 359.5 16.06 5.95
  SRCPARAM CTB7020 5.0 42.67 359.5 16.06 5.95
**70 % LOAD, 59 F, CASE 17
  SRCPARAM CTA7059 5.0 42.67 359.5 15.08 5.95
  SRCPARAM CTB7059 5.0 42.67 359.5 15.08 5.95
**70 % LOAD, 95 F, CASE 18
  SRCPARAM CTA7095 5.0 42.67 360.7 13.95 5.95
  SRCPARAM CTB7095 5.0 42.67 360.7 13.95 5.95

** Building Downwash **
SO BUILDHGT CTA1020-CTA7095  27.74  27.74  27.74  27.74  27.74  27.74
SO BUILDHGT CTA1020-CTA7095  27.74  27.74  27.74  27.74  27.74  27.74
SO BUILDHGT CTA1020-CTA7095  27.74  27.74  27.74  27.74  27.74  27.74
SO BUILDHGT CTA1020-CTA7095  27.74  27.74  27.74  27.74  27.74  27.74
SO BUILDHGT CTA1020-CTA7095  27.74  27.74  27.74  27.74  27.74  27.74
SO BUILDHGT CTA1020-CTA7095  27.74  27.74  27.74  27.74  27.74  27.74
SO BUILDWID CTA1020-CTA7095  33.05  31.43  28.86  25.41  21.19  16.33
SO BUILDWID CTA1020-CTA7095  19.64  24.13  27.89  30.80  32.78  33.76
SO BUILDWID CTA1020-CTA7095  33.71  32.64  30.58  31.83  33.25  33.66
SO BUILDWID CTA1020-CTA7095  33.05  31.43  28.86  25.41  21.19  16.33
SO BUILDWID CTA1020-CTA7095  19.64  24.13  27.89  30.80  32.78  33.76
```

```
SO BUILDWID CTA1020-CTA7095 33.71 32.64 30.58 31.83 33.25 33.66
SO BUILDLEN CTA1020-CTA7095 30.80 32.78 33.76 33.71 32.64 30.58
SO BUILDLEN CTA1020-CTA7095 31.83 33.25 33.66 33.05 31.43 28.86
SO BUILDLEN CTA1020-CTA7095 25.41 21.19 16.33 19.64 24.13 27.89
SO BUILDLEN CTA1020-CTA7095 30.80 32.78 33.76 33.71 32.64 30.58
SO BUILDLEN CTA1020-CTA7095 31.83 33.25 33.66 33.05 31.43 28.86
SO BUILDLEN CTA1020-CTA7095 25.41 21.19 16.33 19.64 24.13 27.89
SO XBADJ   CTA1020-CTA7095 62.64 -60.53 -32.51 -33.94 -34.34 -33.69
SO XBADJ   CTA1020-CTA7095 34.20 -34.17 -33.10 -31.02 -28.00 -24.13
SO XBADJ   CTA1020-CTA7095 19.53 -14.33 -8.70 -7.23 -6.35 -5.28
SO XBADJ   CTA1020-CTA7095 31.84 27.75 -1.25 0.22 1.69 3.11
SO XBADJ   CTA1020-CTA7095 2.37 0.92 -0.56 -2.03 -3.43 -4.73
SO XBADJ   CTA1020-CTA7095 -5.88 -6.86 -7.63 -12.41 -17.78 -22.62
SO YBADJ   CTA1020-CTA7095 13.74 -21.75 9.70 6.82 3.73 0.53
SO YBADJ   CTA1020-CTA7095 -2.59 -5.72 -8.67 -11.36 -13.70 -15.63
SO YBADJ   CTA1020-CTA7095 17.08 -18.01 -18.40 -18.29 -17.55 -16.27
SO YBADJ   CTA1020-CTA7095 13.74 21.75 -9.70 -6.82 -3.73 -0.53
SO YBADJ   CTA1020-CTA7095 2.59 5.72 8.67 11.36 13.70 15.63
SO YBADJ   CTA1020-CTA7095 17.08 18.01 18.40 18.29 17.55 16.27

SO BUILDHGT CTAP1095 27.74 27.74 27.74 27.74 27.74 27.74
SO BUILDHGT CTAP1095 27.74 27.74 27.74 27.74 27.74 27.74
SO BUILDHGT CTAP1095 27.74 27.74 27.74 27.74 27.74 27.74
SO BUILDHGT CTAP1095 27.74 27.74 27.74 27.74 27.74 27.74
SO BUILDHGT CTAP1095 27.74 27.74 27.74 27.74 27.74 27.74
SO BUILDHGT CTAP1095 27.74 27.74 27.74 27.74 27.74 27.74
SO BUILDWID CTAP1095 33.05 31.43 28.86 25.41 21.19 16.33
SO BUILDWID CTAP1095 19.64 24.13 27.89 30.80 32.78 33.76
SO BUILDWID CTAP1095 33.71 32.64 30.58 31.83 33.25 33.66
SO BUILDWID CTAP1095 33.05 31.43 28.86 25.41 21.19 16.33
SO BUILDWID CTAP1095 19.64 24.13 27.89 30.80 32.78 33.76
SO BUILDWID CTAP1095 33.71 32.64 30.58 31.83 33.25 33.66
SO BUILDLEN CTAP1095 30.80 32.78 33.76 33.71 32.64 30.58
SO BUILDLEN CTAP1095 31.83 33.25 33.66 33.05 31.43 28.86
SO BUILDLEN CTAP1095 25.41 21.19 16.33 19.64 24.13 27.89
SO BUILDLEN CTAP1095 30.80 32.78 33.76 33.71 32.64 30.58
SO BUILDLEN CTAP1095 31.83 33.25 33.66 33.05 31.43 28.86
SO BUILDLEN CTAP1095 25.41 21.19 16.33 19.64 24.13 27.89
SO XBADJ   CTAP1095 -62.64 -60.53 -32.51 -33.94 -34.34 -33.69
SO XBADJ   CTAP1095 -34.20 -34.17 -33.10 -31.02 -28.00 -24.13
SO XBADJ   CTAP1095 -19.53 -14.33 -8.70 -7.23 -6.35 -5.28
SO XBADJ   CTAP1095 31.84 27.75 -1.25 0.22 1.69 3.11
SO XBADJ   CTAP1095 2.37 0.92 -0.56 -2.03 -3.43 -4.73
SO XBADJ   CTAP1095 -5.88 -6.86 -7.63 -12.41 -17.78 -22.62
SO YBADJ   CTAP1095 -13.74 -21.75 9.70 6.82 3.73 0.53
SO YBADJ   CTAP1095 -2.59 -5.72 -8.67 -11.36 -13.70 -15.63
SO YBADJ   CTAP1095 -17.08 -18.01 -18.40 -18.29 -17.55 -16.27
SO YBADJ   CTAP1095 13.74 21.75 -9.70 -6.82 -3.73 -0.53
SO YBADJ   CTAP1095 2.59 5.72 8.67 11.36 13.70 15.63
SO YBADJ   CTAP1095 17.08 18.01 18.40 18.29 17.55 16.27

SO BUILDHGT CTB1020-CTB7095 27.74 27.74 27.74 27.74 27.74 27.74
SO BUILDHGT CTB1020-CTB7095 27.74 27.74 27.74 27.74 27.74 27.74
SO BUILDHGT CTB1020-CTB7095 27.74 27.74 27.74 27.74 27.74 27.74
SO BUILDHGT CTB1020-CTB7095 27.74 27.74 27.74 27.74 27.74 27.74
SO BUILDHGT CTB1020-CTB7095 27.74 27.74 27.74 27.74 27.74 27.74
SO BUILDHGT CTB1020-CTB7095 27.74 27.74 27.74 27.74 27.74 27.74
SO BUILDWID CTB1020-CTB7095 33.05 31.43 28.86 25.41 21.19 16.33
SO BUILDWID CTB1020-CTB7095 19.64 24.13 27.89 30.80 32.78 33.76
SO BUILDWID CTB1020-CTB7095 33.71 32.64 30.58 31.83 33.25 33.66
SO BUILDWID CTB1020-CTB7095 33.05 31.43 28.86 25.41 21.19 16.33
SO BUILDWID CTB1020-CTB7095 19.64 24.13 27.89 30.80 32.78 33.76
SO BUILDWID CTB1020-CTB7095 33.71 32.64 30.58 31.83 33.25 33.66
SO BUILDLEN CTB1020-CTB7095 30.80 32.78 33.76 33.71 32.64 30.58
SO BUILDLEN CTB1020-CTB7095 31.83 33.25 33.66 33.05 31.43 28.86
SO BUILDLEN CTB1020-CTB7095 25.41 21.19 16.33 19.64 24.13 27.89
SO BUILDLEN CTB1020-CTB7095 30.80 32.78 33.76 33.71 32.64 30.58
SO BUILDLEN CTB1020-CTB7095 31.83 33.25 33.66 33.05 31.43 28.86
SO BUILDLEN CTB1020-CTB7095 25.41 21.19 16.33 19.64 24.13 27.89
SO XBADJ   CTB1020-CTB7095 -62.64 -60.53 -32.51 -33.94 -34.34 -33.69
SO XBADJ   CTB1020-CTB7095 -34.20 -34.17 -33.10 -31.02 -28.00 -24.13
SO XBADJ   CTB1020-CTB7095 -19.53 -14.33 -8.70 -7.23 -6.35 -5.28
SO XBADJ   CTB1020-CTB7095 31.84 27.75 -1.25 0.22 1.69 3.11
SO XBADJ   CTB1020-CTB7095 2.37 0.92 -0.56 -2.03 -3.43 -4.73
SO XBADJ   CTB1020-CTB7095 -5.88 -6.86 -7.63 -12.41 -17.78 -22.62
SO YBADJ   CTB1020-CTB7095 -13.74 -21.75 9.70 6.82 3.73 0.53
SO YBADJ   CTB1020-CTB7095 -2.59 -5.72 -8.67 -11.36 -13.70 -15.63
SO YBADJ   CTB1020-CTB7095 -17.08 -18.01 -18.40 -18.29 -17.55 -16.27
SO YBADJ   CTB1020-CTB7095 13.74 21.75 -9.70 -6.82 -3.73 -0.53
```

```
SO YBADJ    CTB1020-CTB7095  2.59  5.72  8.67 11.36 13.70 15.63
SO YBADJ    CTB1020-CTB7095 17.08 18.01 18.40 18.29 17.55 16.27

SO BUILDHGT CTBP1095 27.74 27.74 27.74 27.74 27.74 27.74
SO BUILDHGT CTBP1095 27.74 27.74 27.74 27.74 27.74 27.74
SO BUILDHGT CTBP1095 27.74 27.74 27.74 27.74 27.74 27.74
SO BUILDHGT CTBP1095 27.74 27.74 27.74 27.74 27.74 27.74
SO BUILDHGT CTBP1095 27.74 27.74 27.74 27.74 27.74 27.74
SO BUILDHGT CTBP1095 27.74 27.74 27.74 27.74 27.74 27.74
SO BUILDWID CTBP1095 33.05 31.43 28.86 25.41 21.19 16.33
SO BUILDWID CTBP1095 19.64 24.13 27.89 30.80 32.78 33.76
SO BUILDWID CTBP1095 33.71 32.64 30.58 31.83 33.25 33.66
SO BUILDWID CTBP1095 33.05 31.43 28.86 25.41 21.19 16.33
SO BUILDWID CTBP1095 19.64 24.13 27.89 30.80 32.78 33.76
SO BUILDWID CTBP1095 33.71 32.64 30.58 31.83 33.25 33.66
SO BUILDLEN CTBP1095 30.80 32.78 33.76 33.71 32.64 30.58
SO BUILDLEN CTBP1095 31.83 33.25 33.66 33.05 31.43 28.86
SO BUILDLEN CTBP1095 25.41 21.19 16.33 19.64 24.13 27.89
SO BUILDLEN CTBP1095 30.80 32.78 33.76 33.71 32.64 30.58
SO BUILDLEN CTBP1095 31.83 33.25 33.66 33.05 31.43 28.86
SO BUILDLEN CTBP1095 25.41 21.19 16.33 19.64 24.13 27.89
SO XBADJ    CTBP1095 -62.64 -60.53 -32.51 -33.94 -34.34 -33.69
SO XBADJ    CTBP1095 -34.20 -34.17 -33.10 -31.02 -28.00 -24.13
SO XBADJ    CTBP1095 -19.53 -14.33  -8.70  -7.23  -6.35  -5.28
SO XBADJ    CTBP1095  31.84  27.75  -1.25   0.22   1.69   3.11
SO XBADJ    CTBP1095   2.37   0.92  -0.56  -2.03  -3.43  -4.73
SO XBADJ    CTBP1095  -5.88  -6.86  -7.63 -12.41 -17.78 -22.62
SO YBADJ    CTBP1095 -13.74 -21.75   9.70   6.82   3.73   0.53
SO YBADJ    CTBP1095  -2.59  -5.72  -8.67 -11.36 -13.70 -15.63
SO YBADJ    CTBP1095 -17.08 -18.01 -18.40 -18.29 -17.55 -16.27
SO YBADJ    CTBP1095  13.74  21.75  -9.70  -6.82  -3.73  -0.53
SO YBADJ    CTBP1095   2.59   5.72   8.67  11.36  13.70  15.63
SO YBADJ    CTBP1095  17.08  18.01  18.40  18.29  17.55  16.27

  SRCGROUP 1095P CTAP1095 CTBP1095
  SRCGROUP 1095  CTA1095  CTB1095
  SRCGROUP 1059  CTA1059  CTB1059
  SRCGROUP 1020  CTA1020  CTB1020
  SRCGROUP 7095  CTA7095  CTB7095
  SRCGROUP 7059  CTA7059  CTB7059
  SRCGROUP 7020  CTA7020  CTB7020

SO FINISHED
**
****************************************
** AERMOD Receptor Pathway
****************************************
**
**
RE STARTING
  INCLUDED liveoak.rou
RE FINISHED
**
****************************************
** AERMOD Meteorology Pathway
****************************************
**
**
ME STARTING
  SURFFILE ..\metdata\SAVCHS91.SFC
  PROFFILE ..\metdata\SAVCHS91.PFL
  SURFDATA 03822 1991 SAVANNAH/MUNICIPAL_ARPT
  UAIRDATA 13880 1991 CHARLESTON/INT'L_ARPT
  PROFBASE 46 FEET
ME FINISHED
**
****************************************
** AERMOD Output Pathway
****************************************
**
**
OU STARTING
  RECTABLE ALLAVE FIRST
OU FINISHED
```

AERBOB RELEASE 020304
AERMOD OUTPUT FILE NUMBER 1 :GENLOAD.O90
AERMOD OUTPUT FILE NUMBER 2 :GENLOAD.O91
AERMOD OUTPUT FILE NUMBER 3 :GENLOAD.O92
AERMOD OUTPUT FILE NUMBER 4 :GENLOAD.O93
AERMOD OUTPUT FILE NUMBER 5 :GENLOAD.O94
First title for last output file is: 1990 LIVE OAKS CLASS II CT LOAD ANALYSIS, 2 NG CC CTS 10/31/08
Second title for last output file is: GENERIC EMISSIONS RATE (10 g/s) FOR CTS

AVERAGING TIME	YEAR	CONC (ug/m3)	X (m)	Y (m)	PERIOD ENDING (YYMMDDHH)
SOURCE GROUP ID: 1095P					
Annual					
	1990	0.37363	447400.	3461000.	90123124
	1991	0.39156	447400.	3461000.	91123124
	1992	0.39500	447400.	3461000.	92123124
	1993	0.37390	447400.	3461000.	93123124
	1994	0.31660	447400.	3461000.	94123124
HIGH 24-Hour					
	1990	3.67969	447600.	3460800.	90012624
	1991	5.04816	447400.	3460900.	91021524
	1992	4.03532	447500.	3460700.	92031124
	1993	5.28485	447600.	3460900.	93103124
	1994	4.37142	447600.	3461100.	94010424
HIGH 8-Hour					
	1990	7.11377	447500.	3461000.	90052216
	1991	8.46412	447300.	3460900.	91021516
	1992	7.92650	447300.	3460900.	92032716
	1993	11.85208	447300.	3461000.	93031324
	1994	6.71277	447300.	3460700.	94032916
HIGH 3-Hour					
	1990	13.07557	446900.	3461800.	90022215
	1991	10.12049	446800.	3461900.	91032915
	1992	12.54156	447300.	3460900.	92032715
	1993	13.05717	447300.	3461100.	93103112
	1994	9.48975	447600.	3460900.	94030224
HIGH 1-Hour					
	1990	14.32030	447300.	3460900.	90100418
	1991	15.12609	447200.	3460700.	91060121
	1992	14.20447	447500.	3461200.	92040419
	1993	16.81128	447300.	3461000.	93031318
	1994	13.07982	447300.	3461100.	94031614
SOURCE GROUP ID: 1095					
Annual					
	1990	0.40841	447400.	3461000.	90123124
	1991	0.42867	447400.	3461000.	91123124
	1992	0.43455	447400.	3461000.	92123124
	1993	0.41169	447400.	3461000.	93123124
	1994	0.34937	447400.	3461000.	94123124
HIGH 24-Hour					
	1990	4.08673	447600.	3460800.	90012624
	1991	5.66487	447500.	3461000.	91030424
	1992	4.50651	447400.	3460800.	92031124
	1993	5.59151	447600.	3460900.	93103124
	1994	4.80650	447600.	3461100.	94010424
HIGH 8-Hour					
	1990	8.28567	446800.	3461800.	90031516
	1991	8.81990	447600.	3461000.	91030408
	1992	7.93809	447300.	3460900.	92032716
	1993	12.84317	447300.	3461000.	93031324
	1994	7.62270	447400.	3461000.	94011416
HIGH 3-Hour					
	1990	14.25314	446900.	3461800.	90022215
	1991	11.23651	447400.	3461100.	91021412
	1992	11.79090	447300.	3460900.	92032715
	1993	14.08135	447300.	3461100.	93103112
	1994	10.10198	447600.	3460900.	94030224
HIGH 1-Hour					
	1990	15.54453	446900.	3461700.	90022213
	1991	16.60402	447200.	3460700.	91060121
	1992	14.48422	447300.	3461000.	92032716
	1993	17.76231	447300.	3461000.	93031318
	1994	14.29552	447300.	3461100.	94031614
SOURCE GROUP ID: 1059					
Annual					
	1990	0.36724	447400.	3461000.	90123124

1991	0.38513	447400.	3461000.	91123124
1992	0.38840	447500.	3460900.	92123124
1993	0.36689	447400.	3461000.	93123124
1994	0.31067	447400.	3461000.	94123124
HIGH 24-Hour				
1990	3.61323	447800.	3460700.	90012624
1991	4.91170	447500.	3461000.	91030424
1992	4.06700	447500.	3460700.	92031124
1993	5.24937	447600.	3460900.	93103124
1994	4.36795	447600.	3461100.	94010424
HIGH 8-Hour				
1990	7.02814	447500.	3461000.	90052216
1991	8.11671	447600.	3461000.	91030408
1992	7.16310	447300.	3460900.	92032716
1993	11.65725	447300.	3461000.	93031324
1994	6.62296	447300.	3460700.	94032916
HIGH 3-Hour				
1990	12.82573	446900.	3461800.	90022215
1991	10.08925	446800.	3461900.	91032915
1992	10.62767	447300.	3460900.	92032715
1993	12.84086	447300.	3461100.	93103112
1994	9.42573	447600.	3461100.	94010409
HIGH 1-Hour				
1990	14.02154	446900.	3461800.	90022213
1991	14.82780	447200.	3460700.	91060121
1992	13.90091	447500.	3461200.	92040419
1993	16.67260	447300.	3461000.	93031318
1994	13.41046	447300.	3461100.	94031614
SOURCE GROUP ID: 1020				
Annual				
1990	0.33347	447500.	3461000.	90123124
1991	0.34696	447400.	3461000.	91123124
1992	0.35327	447500.	3460900.	92123124
1993	0.33142	447500.	3460900.	93123124
1994	0.27998	447500.	3460900.	94123124
HIGH 24-Hour				
1990	3.30791	447800.	3460700.	90012624
1991	4.59340	447600.	3460900.	91030424
1992	3.71372	447500.	3460700.	92031124
1993	4.77016	447600.	3460900.	93103124
1994	3.99460	447700.	3461100.	94010424
HIGH 8-Hour				
1990	6.57044	447500.	3461000.	90052216
1991	7.69846	447600.	3461000.	91030408
1992	6.37288	447500.	3461200.	92072816
1993	10.61334	447300.	3461000.	93031324
1994	6.15029	447300.	3460700.	94032916
HIGH 3-Hour				
1990	11.63662	446900.	3461800.	90022215
1991	9.03115	447500.	3460900.	91030409
1992	8.94322	447300.	3460900.	92032715
1993	11.89080	447300.	3461100.	93103112
1994	8.74451	447700.	3461000.	94010409
HIGH 1-Hour				
1990	13.04346	447600.	3461200.	90022418
1991	13.11913	447200.	3460700.	91060121
1992	12.54710	447600.	3461200.	92040419
1993	15.70374	447300.	3461000.	93031318
1994	11.78037	447300.	3461100.	94031614
SOURCE GROUP ID: 7095				
Annual				
1990	0.51905	447400.	3461000.	90123124
1991	0.54540	447400.	3461000.	91123124
1992	0.55668	447400.	3461000.	92123124
1993	0.53592	447400.	3461000.	93123124
1994	0.44932	447400.	3461000.	94123124
HIGH 24-Hour				
1990	5.11544	447600.	3460800.	90012624
1991	7.50742	447400.	3461000.	91030424
1992	5.84986	447400.	3460800.	92031124
1993	7.51121	447300.	3461000.	93031424
1994	6.06703	447500.	3461100.	94010424
HIGH 8-Hour				
1990	11.22198	446800.	3461800.	90031516
1991	11.43250	447400.	3461000.	91030416
1992	9.84424	447300.	3460900.	92032716
1993	15.46463	447300.	3461000.	93031324
1994	10.11228	447400.	3461000.	94011416
HIGH 3-Hour				

1990	18.31753	446900.	3461700.	90022215
1991	15.05516	447400.	3461100.	91021412
1992	14.23203	447300.	3460900.	92032715
1993	16.94521	447300.	3461100.	93103112
1994	14.38643	447300.	3461000.	94031018

HIGH 1-Hour

1990	20.42620	446900.	3461700.	90031710
1991	20.12704	447200.	3460700.	91060121
1992	17.62559	446800.	3460700.	92031602
1993	20.45928	447126.	3461100.	93031318
1994	18.16462	447500.	3461300.	94031823

SOURCE GROUP ID: 7059

Annual

1990	0.48169	447400.	3461000.	90123124
1991	0.50691	447400.	3461000.	91123124
1992	0.51568	447400.	3461000.	92123124
1993	0.49177	447400.	3461000.	93123124
1994	0.41638	447400.	3461000.	94123124

HIGH 24-Hour

1990	4.69744	447600.	3460800.	90012624
1991	7.02140	447400.	3461000.	91030424
1992	5.32196	447400.	3460800.	92031124
1993	6.82489	447400.	3460900.	93031424
1994	5.64064	447500.	3461100.	94010424

HIGH 8-Hour

1990	9.78456	446800.	3461800.	90031516
1991	10.80084	447400.	3461000.	91030416
1992	9.22182	447300.	3460900.	92032716
1993	14.63386	447300.	3461000.	93031324
1994	9.02931	447300.	3460900.	94030316

HIGH 3-Hour

1990	16.87442	446900.	3461700.	90022215
1991	14.42084	447400.	3461100.	91021412
1992	13.55725	447300.	3460900.	92032715
1993	15.95303	447300.	3461100.	93103112
1994	13.64377	447300.	3461000.	94031018

HIGH 1-Hour

1990	18.75033	446900.	3461700.	90031710
1991	19.06545	447200.	3460700.	91060121
1992	16.56928	447300.	3461000.	92032716
1993	19.23663	447300.	3461000.	93031318
1994	16.69448	447500.	3461300.	94031823

SOURCE GROUP ID: 7020

Annual

1990	0.44782	447400.	3461000.	90123124
1991	0.47170	447400.	3461000.	91123124
1992	0.47940	447400.	3461000.	92123124
1993	0.45549	447400.	3461000.	93123124
1994	0.38700	447400.	3461000.	94123124

HIGH 24-Hour

1990	4.39065	447600.	3460800.	90012624
1991	6.35085	447400.	3461000.	91030424
1992	4.94232	447400.	3460800.	92031124
1993	6.14317	447600.	3460900.	93103124
1994	5.28816	447500.	3461100.	94010424

HIGH 8-Hour

1990	9.18075	446800.	3461800.	90031516
1991	9.49771	447400.	3461000.	91030416
1992	8.67283	447300.	3460900.	92032716
1993	13.84003	447300.	3461000.	93031324
1994	8.38618	447300.	3460900.	94030316

HIGH 3-Hour

1990	15.58193	446900.	3461700.	90022215
1991	12.37279	446900.	3461800.	91032915
1992	12.89559	447300.	3460900.	92032715
1993	15.11370	447300.	3461100.	93103112
1994	13.03178	447300.	3461000.	94031018

HIGH 1-Hour

1990	17.24207	446900.	3461700.	90031710
1991	18.05093	447200.	3460700.	91060121
1992	15.55392	447300.	3461000.	92032716
1993	18.57628	447300.	3461000.	93031318
1994	15.32582	447500.	3461300.	94031823

All receptor computations reported with respect to a user-specified origin

GRID 0.00 0.00

DISCRETE 0.00 0.00

NOX CLASS2 SIG ANALYSIS

AERMOD INPUT AND SUMMARY FILE

```
CO STARTING
  TITLEONE 1990 LIVE OAKS NOX CLASS II SIG ANALYSIS      11/3/08
  TITLETWO SAVANNAH/CHARLESTON, 1990-94 MET,CTS AT BASE LOAD, 59F, 4000 HRS DB
  MODELOPT DFAULT CONC NOWARN
  AVERTIME PERIOD
  POLLUTID NOX
  RUNORNOT RUN
CO FINISHED
**
****************************************
** AERMOD Source Pathway
****************************************
**
**
SO STARTING
** Source Location **
** Source ID - Type - X Coord. - Y Coord. **

  LOCATION  CTA POINT 446874.163 3461265.046 3.0
  LOCATION  CTB POINT 446895.783 3461224.630 3.0
  LOCATION  CTADB POINT 446874.163 3461265.046 3.0
  LOCATION  CTBDB POINT 446895.783 3461224.630 3.0
  LOCATION  FGH POINT 446725.060 3461305.650 3.0

** Source Parameters **
**
** FOR NOX CTS ASSUMED TO OPERATE AT BASE LOAD/59F FOR 4760 HRS AND
**                    AT BASE LOAD/59F WITH DB FOR 4000 HRS
**
** CTS AT BASE LOAD/59 DEG, NO DUCT FIRING FOR 4760 HOURS: 18.6 LB/HR PER CT
** ANNUALIZED ER: 18.6 LB/HR * 4760 HRS / 8760 HRS/YR *0.126 = 1.273 G/S
  SRCPARAM   CTA  1.273  42.7 364.0 19.12 5.95
  SRCPARAM   CTB  1.273  42.7 364.0 19.12 5.95

** CTS AT BASE LOAD/59 DEG, WITH DUCT FIRING FOR 4000 HOURS: 20.7 LB/HR PER CT
** ANNUALIZED ER: 21.7 LB/HR * 4000 HRS / 8760 HRS/YR *0.126 = 1.248 G/S
  SRCPARAM   CTADB 1.2485  42.7 361.0 19.07 5.95
  SRCPARAM   CTBDB 1.2485  42.7 361.0 19.07 5.95

** NOX EMISSION FOR FGH = 5.168 TPY /4.38 *.126 = 0.149 G/S
  SRCPARAM   FGH  0.149 12.2 651.5  6.40 0.46

** Building Downwash **
SO BUILDHGT CTA  27.74  27.74  27.74  27.74  27.74  27.74
SO BUILDHGT CTA  27.74  27.74  27.74  27.74  27.74  27.74
SO BUILDHGT CTA  27.74  27.74  27.74  27.74  27.74  27.74
SO BUILDHGT CTA  27.74  27.74  27.74  27.74  27.74  27.74
SO BUILDHGT CTA  27.74  27.74  27.74  27.74  27.74  27.74
SO BUILDHGT CTA  27.74  27.74  27.74  27.74  27.74  27.74
SO BUILDWID CTA  33.05  31.43  28.86  25.41  21.19  16.33
SO BUILDWID CTA  19.64  24.13  27.89  30.80  32.78  33.76
SO BUILDWID CTA  33.71  32.64  30.58  31.83  33.25  33.66
SO BUILDWID CTA  33.05  31.43  28.86  25.41  21.19  16.33
SO BUILDWID CTA  19.64  24.13  27.89  30.80  32.78  33.76
SO BUILDWID CTA  33.71  32.64  30.58  31.83  33.25  33.66
SO BUILDLEN CTA  30.80  32.78  33.76  33.71  32.64  30.58
SO BUILDLEN CTA  31.83  33.25  33.66  33.05  31.43  28.86
SO BUILDLEN CTA  25.41  21.19  16.33  19.64  24.13  27.89
SO BUILDLEN CTA  30.80  32.78  33.76  33.71  32.64  30.58
SO BUILDLEN CTA  31.83  33.25  33.66  33.05  31.43  28.86
SO BUILDLEN CTA  25.41  21.19  16.33  19.64  24.13  27.89
SO XBADJ   CTA  62.64 -60.53 -32.51 -33.94 -34.34 -33.69
SO XBADJ   CTA  34.20 -34.17 -33.10 -31.02 -28.00 -24.13
SO XBADJ   CTA  19.53 -14.33  -8.70  -7.23  -6.35  -5.28
SO XBADJ   CTA  31.84  27.75  -1.25   0.22   1.69   3.11
SO XBADJ   CTA   2.37   0.92  -0.56  -2.03  -3.43  -4.73
SO XBADJ   CTA  -5.88  -6.86  -7.63 -12.41 -17.78 -22.62
SO YBADJ   CTA  13.74 -21.75   9.70   6.82   3.73   0.53
SO YBADJ   CTA  -2.59  -5.72  -8.67 -11.36 -13.70 -15.63
SO YBADJ   CTA  17.08 -18.01 -18.40 -18.29 -17.55 -16.27
SO YBADJ   CTA  13.74  21.75  -9.70  -6.82  -3.73  -0.53
SO YBADJ   CTA   2.59   5.72   8.67  11.36  13.70  15.63
SO YBADJ   CTA  17.08  18.01  18.40  18.29  17.55  16.27

SO BUILDHGT CTB  27.74  27.74  27.74  27.74  27.74  27.74
SO BUILDHGT CTB  27.74  27.74  27.74  27.74  27.74  27.74
SO BUILDHGT CTB  27.74  27.74  27.74  27.74  27.74  27.74
SO BUILDHGT CTB  27.74  27.74  27.74  27.74  27.74  27.74
SO BUILDHGT CTB  27.74  27.74  27.74  27.74  27.74  27.74
```

```
SO BUILDHGT CTB  27.74  27.74  27.74  27.74  27.74  27.74
SO BUILDWID CTB  33.05  31.43  28.86  25.41  21.19  16.33
SO BUILDWID CTB  19.64  24.13  27.89  30.80  32.78  33.76
SO BUILDWID CTB  33.71  32.64  30.58  31.83  33.25  33.66
SO BUILDWID CTB  33.05  31.43  28.86  25.41  21.19  16.33
SO BUILDWID CTB  19.64  24.13  27.89  30.80  32.78  33.76
SO BUILDWID CTB  33.71  32.64  30.58  31.83  33.25  33.66
SO BUILDLEN CTB  30.80  32.78  33.76  33.71  32.64  30.58
SO BUILDLEN CTB  31.83  33.25  33.66  33.05  31.43  28.86
SO BUILDLEN CTB  25.41  21.19  16.33  19.64  24.13  27.89
SO BUILDLEN CTB  30.80  32.78  33.76  33.71  32.64  30.58
SO BUILDLEN CTB  31.83  33.25  33.66  33.05  31.43  28.86
SO BUILDLEN CTB  25.41  21.19  16.33  19.64  24.13  27.89
SO XBADJ    CTB -62.64 -60.53 -32.51 -33.94 -34.34 -33.69
SO XBADJ    CTB -34.20 -34.17 -33.10 -31.02 -28.00 -24.13
SO XBADJ    CTB -19.53 -14.33  -8.70  -7.23  -6.35  -5.28
SO XBADJ    CTB  31.84  27.75  -1.25   0.22   1.69   3.11
SO XBADJ    CTB   2.37   0.92  -0.56  -2.03  -3.43  -4.73
SO XBADJ    CTB  -5.88  -6.86  -7.63 -12.41 -17.78 -22.62
SO YBADJ    CTB -13.74 -21.75   9.70   6.82   3.73   0.53
SO YBADJ    CTB  -2.59  -5.72  -8.67 -11.36 -13.70 -15.63
SO YBADJ    CTB -17.08 -18.01 -18.40 -18.29 -17.55 -16.27
SO YBADJ    CTB  13.74  21.75  -9.70  -6.82  -3.73  -0.53
SO YBADJ    CTB   2.59   5.72   8.67  11.36  13.70  15.63
SO YBADJ    CTB  17.08  18.01  18.40  18.29  17.55  16.27

SO BUILDHGT CTADB  27.74  27.74  27.74  27.74  27.74  27.74
SO BUILDHGT CTADB  27.74  27.74  27.74  27.74  27.74  27.74
SO BUILDHGT CTADB  27.74  27.74  27.74  27.74  27.74  27.74
SO BUILDHGT CTADB  27.74  27.74  27.74  27.74  27.74  27.74
SO BUILDHGT CTADB  27.74  27.74  27.74  27.74  27.74  27.74
SO BUILDHGT CTADB  27.74  27.74  27.74  27.74  27.74  27.74
SO BUILDWID CTADB  33.05  31.43  28.86  25.41  21.19  16.33
SO BUILDWID CTADB  19.64  24.13  27.89  30.80  32.78  33.76
SO BUILDWID CTADB  33.71  32.64  30.58  31.83  33.25  33.66
SO BUILDWID CTADB  33.05  31.43  28.86  25.41  21.19  16.33
SO BUILDWID CTADB  19.64  24.13  27.89  30.80  32.78  33.76
SO BUILDWID CTADB  33.71  32.64  30.58  31.83  33.25  33.66
SO BUILDLEN CTADB  30.80  32.78  33.76  33.71  32.64  30.58
SO BUILDLEN CTADB  31.83  33.25  33.66  33.05  31.43  28.86
SO BUILDLEN CTADB  25.41  21.19  16.33  19.64  24.13  27.89
SO BUILDLEN CTADB  30.80  32.78  33.76  33.71  32.64  30.58
SO BUILDLEN CTADB  31.83  33.25  33.66  33.05  31.43  28.86
SO BUILDLEN CTADB  25.41  21.19  16.33  19.64  24.13  27.89
SO XBADJ    CTADB  62.64 -60.53 -32.51 -33.94 -34.34 -33.69
SO XBADJ    CTADB  34.20 -34.17 -33.10 -31.02 -28.00 -24.13
SO XBADJ    CTADB  19.53 -14.33  -8.70  -7.23  -6.35  -5.28
SO XBADJ    CTADB  31.84  27.75  -1.25   0.22   1.69   3.11
SO XBADJ    CTADB   2.37   0.92  -0.56  -2.03  -3.43  -4.73
SO XBADJ    CTADB  -5.88  -6.86  -7.63 -12.41 -17.78 -22.62
SO YBADJ    CTADB  13.74 -21.75   9.70   6.82   3.73   0.53
SO YBADJ    CTADB  -2.59  -5.72  -8.67 -11.36 -13.70 -15.63
SO YBADJ    CTADB  17.08 -18.01 -18.40 -18.29 -17.55 -16.27
SO YBADJ    CTADB  13.74  21.75  -9.70  -6.82  -3.73  -0.53
SO YBADJ    CTADB   2.59   5.72   8.67  11.36  13.70  15.63
SO YBADJ    CTADB  17.08  18.01  18.40  18.29  17.55  16.27

SO BUILDHGT CTBDB  27.74  27.74  27.74  27.74  27.74  27.74
SO BUILDHGT CTBDB  27.74  27.74  27.74  27.74  27.74  27.74
SO BUILDHGT CTBDB  27.74  27.74  27.74  27.74  27.74  27.74
SO BUILDHGT CTBDB  27.74  27.74  27.74  27.74  27.74  27.74
SO BUILDHGT CTBDB  27.74  27.74  27.74  27.74  27.74  27.74
SO BUILDHGT CTBDB  27.74  27.74  27.74  27.74  27.74  27.74
SO BUILDWID CTBDB  33.05  31.43  28.86  25.41  21.19  16.33
SO BUILDWID CTBDB  19.64  24.13  27.89  30.80  32.78  33.76
SO BUILDWID CTBDB  33.71  32.64  30.58  31.83  33.25  33.66
SO BUILDWID CTBDB  33.05  31.43  28.86  25.41  21.19  16.33
SO BUILDWID CTBDB  19.64  24.13  27.89  30.80  32.78  33.76
SO BUILDWID CTBDB  33.71  32.64  30.58  31.83  33.25  33.66
SO BUILDLEN CTBDB  30.80  32.78  33.76  33.71  32.64  30.58
SO BUILDLEN CTBDB  31.83  33.25  33.66  33.05  31.43  28.86
SO BUILDLEN CTBDB  25.41  21.19  16.33  19.64  24.13  27.89
SO BUILDLEN CTBDB  30.80  32.78  33.76  33.71  32.64  30.58
SO BUILDLEN CTBDB  31.83  33.25  33.66  33.05  31.43  28.86
SO BUILDLEN CTBDB  25.41  21.19  16.33  19.64  24.13  27.89
SO XBADJ    CTBDB -62.64 -60.53 -32.51 -33.94 -34.34 -33.69
SO XBADJ    CTBDB -34.20 -34.17 -33.10 -31.02 -28.00 -24.13
SO XBADJ    CTBDB -19.53 -14.33  -8.70  -7.23  -6.35  -5.28
SO XBADJ    CTBDB  31.84  27.75  -1.25   0.22   1.69   3.11
```

```
SO XBADJ   CTBDB  2.37  0.92 -0.56 -2.03 -3.43 -4.73
SO XBADJ   CTBDB -5.88 -6.86 -7.63 -12.41 -17.78 -22.62
SO YBADJ   CTBDB -13.74 -21.75  9.70  6.82  3.73  0.53
SO YBADJ   CTBDB -2.59 -5.72 -8.67 -11.36 -13.70 -15.63
SO YBADJ   CTBDB -17.08 -18.01 -18.40 -18.29 -17.55 -16.27
SO YBADJ   CTBDB 13.74 21.75 -9.70 -6.82 -3.73 -0.53
SO YBADJ   CTBDB  2.59  5.72  8.67 11.36 13.70 15.63
SO YBADJ   CTBDB 17.08 18.01 18.40 18.29 17.55 16.27

SO BUILDHGT FGH      0.00   0.00   0.00   0.00   0.00   0.00
SO BUILDHGT FGH      0.00   0.00   0.00   0.00   0.00   0.00
SO BUILDHGT FGH      0.00   0.00   0.00   0.00   0.00   0.00
SO BUILDHGT FGH      0.00   0.00   0.00   0.00   0.00   0.00
SO BUILDHGT FGH      0.00   0.00   0.00  27.74  27.74  27.74
SO BUILDHGT FGH      0.00   0.00   0.00   0.00   0.00   0.00
SO BUILDWID FGH      0.00   0.00   0.00   0.00   0.00   0.00
SO BUILDWID FGH      0.00   0.00   0.00   0.00   0.00   0.00
SO BUILDWID FGH      0.00   0.00   0.00   0.00   0.00   0.00
SO BUILDWID FGH      0.00   0.00   0.00   0.00   0.00   0.00
SO BUILDWID FGH      0.00   0.00   0.00  30.80  32.78  33.76
SO BUILDWID FGH      0.00   0.00   0.00   0.00   0.00   0.00
SO BUILDLEN FGH      0.00   0.00   0.00   0.00   0.00   0.00
SO BUILDLEN FGH      0.00   0.00   0.00   0.00   0.00   0.00
SO BUILDLEN FGH      0.00   0.00   0.00   0.00   0.00   0.00
SO BUILDLEN FGH      0.00   0.00   0.00   0.00   0.00   0.00
SO BUILDLEN FGH      0.00   0.00   0.00  33.05  31.43  28.86
SO BUILDLEN FGH      0.00   0.00   0.00   0.00   0.00   0.00
SO XBADJ   FGH      0.00   0.00   0.00   0.00   0.00   0.00
SO XBADJ   FGH      0.00   0.00   0.00   0.00   0.00   0.00
SO XBADJ   FGH      0.00   0.00   0.00   0.00   0.00   0.00
SO XBADJ   FGH      0.00   0.00   0.00   0.00   0.00   0.00
SO XBADJ   FGH      0.00   0.00   0.00 -155.91 -157.43 -154.16
SO XBADJ   FGH      0.00   0.00   0.00   0.00   0.00   0.00
SO YBADJ   FGH      0.00   0.00   0.00   0.00   0.00   0.00
SO YBADJ   FGH      0.00   0.00   0.00   0.00   0.00   0.00
SO YBADJ   FGH      0.00   0.00   0.00   0.00   0.00   0.00
SO YBADJ   FGH      0.00   0.00   0.00   0.00   0.00   0.00
SO YBADJ   FGH      0.00   0.00   0.00  25.45   0.86  -23.76
SO YBADJ   FGH      0.00   0.00   0.00   0.00   0.00   0.00

  SRCGROUP ALL

SO FINISHED
**
****************************************
** AERMOD Receptor Pathway
****************************************
**
**
RE STARTING
  INCLUDED liveoak.rou
RE FINISHED
**
****************************************
** AERMOD Meteorology Pathway
****************************************
**
**
ME STARTING
  SURFFILE ..\metdata\SAVCHS90.SFC
  PROFFILE ..\metdata\SAVCHS90.PFL
  SURFDATA 03822 1990 SAVANNAH/MUNICIPAL_ARPT
  UAIRDATA 13880 1990 CHARLESTON/INT'L_ARPT
  PROFBASE 46 FEET
ME FINISHED
**
****************************************
** AERMOD Output Pathway
****************************************
**
**
OU STARTING
  RECTABLE ALLAVE FIRST
OU FINISHED
```

AERBOB RELEASE 020304
AERMOD OUTPUT FILE NUMBER 1 :noxsig.o90
AERMOD OUTPUT FILE NUMBER 2 :noxsig.o91
AERMOD OUTPUT FILE NUMBER 3 :noxsig.o92
AERMOD OUTPUT FILE NUMBER 4 :noxsig.o93
AERMOD OUTPUT FILE NUMBER 5 :noxsig.o94
First title for last output file is: 1990 LIVE OAKS NOX CLASS II SIG ANALYSIS 11/3/08
Second title for last output file is: SAVANNAH/CHARLESTON, 1990-94 MET,CTS AT BASE LOAD, 59F, 4000 HRS DB

AVERAGING TIME	YEAR	CONC (ug/m3)	X (m)	Y (m)	PERIOD ENDING (YYMMDDHH)
SOURCE GROUP ID: ALL					
Annual					
	1990	0.6740	446646.	3461252.	90123124
	1991	0.8180	446600.	3461200.	91123124
	1992	0.8090	446600.	3461200.	92123124
	1993	0.7810	446669.	3461208.	93123124
	1994	0.8677	446600.	3461200.	94123124

All receptor computations reported with respect to a user-specified origin
GRID 0.00 0.00
DISCRETE 0.00 0.00

PM10 CLASS2 SIG ANALYSIS

AERMOD INPUT AND SUMMARY FILE

```
CO STARTING
  TITLEONE 1990 LIVE OAKS PM10 CLASS II SIG ANALYSIS      11/3/08
  TITLETWO SAVANNAH/CHARLESTON, 1990-94 MET, CTS AT BASE LOAD, 95 DEG, DB
  MODELOPT DFAULT CONC NOWARN
  AVERTIME PERIOD 24
  POLLUTID PM.10
  RUNORNOT RUN
CO FINISHED
**
****************************************
** AERMOD Source Pathway
****************************************
**
**
SO STARTING
** Source Location **
** Source ID - Type - X Coord. - Y Coord. **

  LOCATION CTA   POINT 446874.163 3461265.046 3.0
  LOCATION CTB   POINT 446895.783 3461224.630 3.0
  LOCATION COOL1 POINT 446885.382 3461334.586 3.0
  LOCATION COOL2 POINT 446892.192 3461321.892 3.0
  LOCATION COOL3 POINT 446899.186 3461308.829 3.0
  LOCATION COOL4 POINT 446906.026 3461295.974 3.0
  LOCATION COOL5 POINT 446912.866 3461283.092 3.0
  LOCATION COOL6 POINT 446919.799 3461270.180 3.0
  LOCATION COOL7 POINT 446926.675 3461257.351 3.0
  LOCATION COOL8 POINT 446933.682 3461244.235 3.0
  LOCATION COOL9 POINT 446940.423 3461231.511 3.0
  LOCATION COOL10 POINT 446947.388 3461218.520 3.0
  LOCATION   FGH POINT 446725.060 3461305.650 3.0

** Source Parameters **
**
**CTS ON WORST CASE LOAD/TEMP FOR PM10: BASE LOAD, 95 F, DB
**
  SRCPARAM    CTA 1.48 42.7 360.4 17.37 5.95
  SRCPARAM    CTB 1.48 42.7 360.4 17.37 5.95
** COOLING TOWER CELLS 1-10 FOR 0.001% DRIFT RATE
  SRCPARAM  COOL1 0.0106 13.72 315.9 11.96 8.53
  SRCPARAM  COOL2 0.0106 13.72 315.9 11.96 8.53
  SRCPARAM  COOL3 0.0106 13.72 315.9 11.96 8.53
  SRCPARAM  COOL4 0.0106 13.72 315.9 11.96 8.53
  SRCPARAM  COOL5 0.0106 13.72 315.9 11.96 8.53
  SRCPARAM  COOL6 0.0106 13.72 315.9 11.96 8.53
  SRCPARAM  COOL7 0.0106 13.72 315.9 11.96 8.53
  SRCPARAM  COOL8 0.0106 13.72 315.9 11.96 8.53
  SRCPARAM  COOL9 0.0106 13.72 315.9 11.96 8.53
  SRCPARAM COOL10 0.0106 13.72 315.9 11.96 8.53
** FUEL GAS HEATER
  SRCPARAM    FGH 0.009 12.2 651.5  6.40 0.46

** Building Downwash **
SO BUILDHGT CTA  27.74  27.74  27.74  27.74  27.74  27.74
SO BUILDHGT CTA  27.74  27.74  27.74  27.74  27.74  27.74
SO BUILDHGT CTA  27.74  27.74  27.74  27.74  27.74  27.74
SO BUILDHGT CTA  27.74  27.74  27.74  27.74  27.74  27.74
SO BUILDHGT CTA  27.74  27.74  27.74  27.74  27.74  27.74
SO BUILDHGT CTA  27.74  27.74  27.74  27.74  27.74  27.74
SO BUILDWID CTA  33.05  31.43  28.86  25.41  21.19  16.33
SO BUILDWID CTA  19.64  24.13  27.89  30.80  32.78  33.76
SO BUILDWID CTA  33.71  32.64  30.58  31.83  33.25  33.66
SO BUILDWID CTA  33.05  31.43  28.86  25.41  21.19  16.33
SO BUILDWID CTA  19.64  24.13  27.89  30.80  32.78  33.76
SO BUILDWID CTA  33.71  32.64  30.58  31.83  33.25  33.66
SO BUILDLEN CTA  30.80  32.78  33.76  33.71  32.64  30.58
SO BUILDLEN CTA  31.83  33.25  33.66  33.05  31.43  28.86
SO BUILDLEN CTA  25.41  21.19  16.33  19.64  24.13  27.89
SO BUILDLEN CTA  30.80  32.78  33.76  33.71  32.64  30.58
SO BUILDLEN CTA  31.83  33.25  33.66  33.05  31.43  28.86
SO BUILDLEN CTA  25.41  21.19  16.33  19.64  24.13  27.89
SO XBADJ    CTA  62.64 -60.53 -32.51 -33.94 -34.34 -33.69
SO XBADJ    CTA  34.20 -34.17 -33.10 -31.02 -28.00 -24.13
SO XBADJ    CTA  19.53 -14.33  -8.70  -7.23  -6.35  -5.28
SO XBADJ    CTA  31.84  27.75  -1.25   0.22   1.69   3.11
SO XBADJ    CTA   2.37   0.92  -0.56  -2.03  -3.43  -4.73
SO XBADJ    CTA  -5.88  -6.86  -7.63 -12.41 -17.78 -22.62
SO YBADJ    CTA  13.74 -21.75   9.70   6.82   3.73   0.53
SO YBADJ    CTA  -2.59  -5.72  -8.67 -11.36 -13.70 -15.63
```

```
SO YBADJ   CTA 17.08 -18.01 -18.40 -18.29 -17.55 -16.27
SO YBADJ   CTA 13.74 21.75 -9.70 -6.82 -3.73 -0.53
SO YBADJ   CTA 2.59 5.72 8.67 11.36 13.70 15.63
SO YBADJ   CTA 17.08 18.01 18.40 18.29 17.55 16.27

SO BUILDHGT CTB 27.74 27.74 27.74 27.74 27.74 27.74
SO BUILDHGT CTB 27.74 27.74 27.74 27.74 27.74 27.74
SO BUILDHGT CTB 27.74 27.74 27.74 27.74 27.74 27.74
SO BUILDHGT CTB 27.74 27.74 27.74 27.74 27.74 27.74
SO BUILDHGT CTB 27.74 27.74 27.74 27.74 27.74 27.74
SO BUILDHGT CTB 27.74 27.74 27.74 27.74 27.74 27.74
SO BUILDWID CTB 33.05 31.43 28.86 25.41 21.19 16.33
SO BUILDWID CTB 19.64 24.13 27.89 30.80 32.78 33.76
SO BUILDWID CTB 33.71 32.64 30.58 31.83 33.25 33.66
SO BUILDWID CTB 33.05 31.43 28.86 25.41 21.19 16.33
SO BUILDWID CTB 19.64 24.13 27.89 30.80 32.78 33.76
SO BUILDWID CTB 33.71 32.64 30.58 31.83 33.25 33.66
SO BUILDLEN CTB 30.80 32.78 33.76 33.71 32.64 30.58
SO BUILDLEN CTB 31.83 33.25 33.66 33.05 31.43 28.86
SO BUILDLEN CTB 25.41 21.19 16.33 19.64 24.13 27.89
SO BUILDLEN CTB 30.80 32.78 33.76 33.71 32.64 30.58
SO BUILDLEN CTB 31.83 33.25 33.66 33.05 31.43 28.86
SO BUILDLEN CTB 25.41 21.19 16.33 19.64 24.13 27.89
SO XBADJ   CTB -62.64 -60.53 -32.51 -33.94 -34.34 -33.69
SO XBADJ   CTB -34.20 -34.17 -33.10 -31.02 -28.00 -24.13
SO XBADJ   CTB -19.53 -14.33 -8.70 -7.23 -6.35 -5.28
SO XBADJ   CTB 31.84 27.75 -1.25 0.22 1.69 3.11
SO XBADJ   CTB 2.37 0.92 -0.56 -2.03 -3.43 -4.73
SO XBADJ   CTB -5.88 -6.86 -7.63 -12.41 -17.78 -22.62
SO YBADJ   CTB -13.74 -21.75 9.70 6.82 3.73 0.53
SO YBADJ   CTB -2.59 -5.72 -8.67 -11.36 -13.70 -15.63
SO YBADJ   CTB -17.08 -18.01 -18.40 -18.29 -17.55 -16.27
SO YBADJ   CTB 13.74 21.75 -9.70 -6.82 -3.73 -0.53
SO YBADJ   CTB 2.59 5.72 8.67 11.36 13.70 15.63
SO YBADJ   CTB 17.08 18.01 18.40 18.29 17.55 16.27

SO BUILDHGT COOL1   27.74 27.74 27.74 10.67 10.67 10.67
SO BUILDHGT COOL1   10.67 10.67 10.67 10.67 10.67 10.67
SO BUILDHGT COOL1   10.67 10.67 10.67 10.67 10.67 10.67
SO BUILDHGT COOL1   10.67 10.67 10.67 10.67 10.67 10.67
SO BUILDHGT COOL1   10.67 10.67 10.67 10.67 10.67 10.67
SO BUILDHGT COOL1   10.67 10.67 10.67 10.67 27.74 27.74
SO BUILDWID COOL1   33.05 31.43 28.86 141.25 146.24 146.79
SO BUILDWID COOL1   146.95 143.66 136.00 124.20 108.64 89.77
SO BUILDWID COOL1   68.17 44.51 19.49 35.05 59.32 81.80
SO BUILDWID COOL1   101.79 118.68 131.97 141.25 146.24 146.79
SO BUILDWID COOL1   146.95 143.66 136.00 124.20 108.64 89.77
SO BUILDWID COOL1   68.17 44.51 19.49 35.05 33.25 33.66
SO BUILDLEN COOL1   30.80 32.78 33.76 68.17 44.51 19.49
SO BUILDLEN COOL1   35.05 59.32 81.80 101.79 118.68 131.97
SO BUILDLEN COOL1   141.25 146.24 146.79 146.95 143.66 136.00
SO BUILDLEN COOL1   124.20 108.64 89.77 68.17 44.51 19.49
SO BUILDLEN COOL1   35.05 59.32 81.80 101.79 118.68 131.97
SO BUILDLEN COOL1   141.25 146.24 146.79 146.95 24.13 27.89
SO XBADJ   COOL1   -133.07 -99.27 -98.34 -58.60 -35.82 -11.95
SO XBADJ   COOL1   -8.32 -9.32 -10.05 -10.46 -10.56 -10.34
SO XBADJ   COOL1   -9.80 -8.97 -7.86 -8.49 -9.43 -10.08
SO XBADJ   COOL1   -10.43 -10.46 -10.17 -9.57 -8.69 -7.54
SO XBADJ   COOL1   -26.73 -50.00 -71.75 -91.33 -108.12 -121.64
SO XBADJ   COOL1   -131.45 -137.28 -138.93 -138.47 -127.69 -92.16
SO YBADJ   COOL1   -14.76 -0.96 -15.35 -60.83 -64.16 -65.54
SO YBADJ   COOL1   -64.99 -62.40 -57.92 -51.67 -43.86 -34.71
SO YBADJ   COOL1   -24.51 -13.57 -2.21 9.20 20.34 30.85
SO YBADJ   COOL1   40.43 48.78 55.65 60.83 64.16 65.54
SO YBADJ   COOL1   64.99 62.40 57.92 51.67 43.86 34.71
SO YBADJ   COOL1   24.51 13.57 2.21 -9.20 26.41 27.49

SO BUILDHGT COOL2   27.74 27.74 27.74 27.74 10.67 10.67
SO BUILDHGT COOL2   10.67 10.67 10.67 10.67 10.67 10.67
SO BUILDHGT COOL2   10.67 10.67 10.67 10.67 10.67 10.67
SO BUILDHGT COOL2   27.74 10.67 10.67 10.67 10.67 10.67
SO BUILDHGT COOL2   10.67 10.67 10.67 10.67 10.67 10.67
SO BUILDHGT COOL2   10.67 10.67 10.67 10.67 10.67 27.74
SO BUILDWID COOL2   33.05 31.43 28.86 25.41 146.24 146.79
SO BUILDWID COOL2   146.95 143.66 136.00 124.20 108.64 89.77
SO BUILDWID COOL2   68.17 44.51 19.49 35.05 59.32 81.80
SO BUILDWID COOL2   33.05 118.68 131.97 141.25 146.24 146.79
SO BUILDWID COOL2   146.95 143.66 136.00 124.20 108.64 89.77
```

```
SO BUILDWID COOL2     68.17  44.51  19.49  35.05  59.32  33.66
SO BUILDLEN COOL2     30.80  32.78  33.76  33.71  44.51  19.49
SO BUILDLEN COOL2     35.05  59.32  81.80 101.79 118.68 131.97
SO BUILDLEN COOL2    141.25 146.24 146.79 146.95 143.66 136.00
SO BUILDLEN COOL2     30.80 108.64  89.77  68.17  44.51  19.49
SO BUILDLEN COOL2     35.05  59.32  81.80 101.79 118.68 131.97
SO BUILDLEN COOL2    141.25 146.24 146.79 146.95 143.66  27.89
SO XBADJ    COOL2   -121.76 -120.11 -90.75 -89.07 -32.88 -11.50
SO XBADJ    COOL2    -10.38 -13.83 -16.86 -19.37 -21.30 -22.58
SO XBADJ    COOL2    -23.18 -23.07 -22.26 -22.74 -23.11 -22.77
SO XBADJ    COOL2     55.07 -20.06 -17.76 -14.92 -11.63  -7.99
SO XBADJ    COOL2    -24.67 -45.50 -64.94 -82.41 -97.38 -109.39
SO XBADJ    COOL2   -118.08 -123.18 -124.53 -124.21 -120.55 -119.70
SO YBADJ    COOL2     -5.85 -24.25  -3.11 -15.91 -50.05 -51.14
SO YBADJ    COOL2    -50.73 -48.72 -45.22 -40.36 -34.26 -27.13
SO YBADJ    COOL2    -19.17 -10.62  -1.76  7.15  15.83  24.04
SO YBADJ    COOL2    -22.38  38.04  43.41  47.45  50.05  51.14
SO YBADJ    COOL2     50.73  48.72  45.22  40.36  34.26  27.13
SO YBADJ    COOL2     19.17  10.62   1.76  -7.15 -15.83  12.72

SO BUILDHGT COOL3     27.74  27.74  27.74  27.74  27.74  10.67
SO BUILDHGT COOL3     10.67  10.67  10.67  10.67  10.67  10.67
SO BUILDHGT COOL3     10.67  10.67  10.67  10.67  10.67  10.67
SO BUILDHGT COOL3     10.67  27.74  27.74  27.74  10.67  10.67
SO BUILDHGT COOL3     10.67  10.67  10.67  10.67  10.67  10.67
SO BUILDHGT COOL3     10.67  10.67  10.67  10.67  10.67  27.74
SO BUILDWID COOL3     33.05  31.43  28.86  25.41  21.19 146.79
SO BUILDWID COOL3    146.95 143.66 136.00 124.20 108.64  89.77
SO BUILDWID COOL3     68.17  44.51  19.49  35.05  59.32  81.80
SO BUILDWID COOL3    101.79  31.43  28.86  25.41 146.24 146.79
SO BUILDWID COOL3    146.95 143.66 136.00 124.20 108.64  89.77
SO BUILDWID COOL3     68.17  44.51  19.49  35.05  59.32  33.66
SO BUILDLEN COOL3     30.80  32.78  33.76  33.71  32.64  19.49
SO BUILDLEN COOL3     35.05  59.32  81.80 101.79 118.68 131.97
SO BUILDLEN COOL3    141.25 146.24 146.79 146.95 143.66 136.00
SO BUILDLEN COOL3    124.20  32.78  33.76  33.71  44.51  19.49
SO BUILDLEN COOL3     35.05  59.32  81.80 101.79 118.68 131.97
SO BUILDLEN COOL3    141.25 146.24 146.79 146.95 143.66  27.89
SO XBADJ    COOL3   -110.11 -110.23 -82.94 -83.56 -81.65 -11.03
SO XBADJ    COOL3    -12.48 -18.45 -23.85 -28.53 -32.34 -35.17
SO XBADJ    COOL3    -36.93 -37.57 -37.07 -37.41 -37.19 -35.84
SO XBADJ    COOL3    -33.40  47.01  49.18  49.85 -14.67  -8.46
SO XBADJ    COOL3    -22.56 -40.88 -57.95 -73.26 -86.34 -96.80
SO XBADJ    COOL3   -104.32 -108.67 -109.72 -109.54 -106.47 -106.64
SO YBADJ    COOL3      3.30 -13.21   9.48  -2.15 -13.72 -36.33
SO YBADJ    COOL3    -36.06 -34.64 -32.16 -28.71 -24.38 -19.31
SO YBADJ    COOL3    -13.66  -7.59  -1.28   5.04  11.22  17.05
SO YBADJ    COOL3     22.36 -20.83  -9.48   2.15  35.55  36.33
SO YBADJ    COOL3     36.06  34.64  32.16  28.71  24.38  19.31
SO YBADJ    COOL3     13.66   7.59   1.28  -5.04 -11.22  19.72

SO BUILDHGT COOL4     27.74  27.74  27.74  27.74  27.74  27.74
SO BUILDHGT COOL4     10.67  10.67  10.67  10.67  10.67  10.67
SO BUILDHGT COOL4     10.67  10.67  10.67  10.67  10.67  10.67
SO BUILDHGT COOL4     10.67  10.67  27.74  27.74  10.67  10.67
SO BUILDHGT COOL4     10.67  10.67  10.67  10.67  10.67  10.67
SO BUILDHGT COOL4     10.67  10.67  10.67  10.67  10.67  27.74
SO BUILDWID COOL4     33.05  31.43  28.86  25.41  21.19  16.33
SO BUILDWID COOL4    146.95 143.66 136.00 124.20 108.64  89.77
SO BUILDWID COOL4     68.17  44.51  19.49  35.05  59.32  81.80
SO BUILDWID COOL4    101.79 118.68  28.86  25.41 146.24 146.79
SO BUILDWID COOL4    146.95 143.66 136.00 124.20 108.64  89.77
SO BUILDWID COOL4     68.17  44.51  19.49  35.05  59.32  33.66
SO BUILDLEN COOL4     30.80  32.78  33.76  33.71  32.64  30.58
SO BUILDLEN COOL4     35.05  59.32  81.80 101.79 118.68 131.97
SO BUILDLEN COOL4    141.25 146.24 146.79 146.95 143.66 136.00
SO BUILDLEN COOL4    124.20 108.64  33.76  33.71  44.51  19.49
SO BUILDLEN COOL4     35.05  59.32  81.80 101.79 118.68 131.97
SO BUILDLEN COOL4    141.25 146.24 146.79 146.95 143.66  27.89
SO XBADJ    COOL4    -98.63 -100.49 -99.29 -78.11 -78.63 -76.75
SO XBADJ    COOL4    -14.51 -22.95 -30.69 -37.50 -43.17 -47.52
SO XBADJ    COOL4    -50.43 -51.81 -51.62 -51.83 -51.04 -48.69
SO XBADJ    COOL4    -44.87 -39.68  41.47  44.40 -17.69  -8.96
SO XBADJ    COOL4    -20.53 -36.37 -51.11 -64.29 -75.52 -84.45
SO XBADJ    COOL4    -90.82 -94.43 -95.17 -95.12 -92.62 -93.78
SO YBADJ    COOL4     12.27  -2.39 -16.97  11.35   0.52 -10.32
SO YBADJ    COOL4    -21.65 -20.79 -19.31 -17.23 -14.64 -11.60
```

```
SO YBADJ   COOL4    -8.20  -4.56  -0.78   3.01   6.71  10.21
SO YBADJ   COOL4    13.40  16.18 -21.83 -11.35  21.31  21.77
SO YBADJ   COOL4    21.65  20.79  19.31  17.23  14.64  11.60
SO YBADJ   COOL4     8.20   4.56   0.78  -3.01  -6.71  26.56

SO BUILDHGT COOL5    27.74  27.74  27.74  27.74  27.74  27.74
SO BUILDHGT COOL5    27.74  27.74  27.74  10.67  10.67  10.67
SO BUILDHGT COOL5    10.67  10.67  10.67  10.67  10.67  10.67
SO BUILDHGT COOL5    10.67  10.67  10.67  27.74  10.67  10.67
SO BUILDHGT COOL5    10.67  27.74  27.74  10.67  10.67  10.67
SO BUILDHGT COOL5    10.67  10.67  10.67  10.67  10.67  10.67
SO BUILDWID COOL5    33.05  31.43  28.86  25.41  21.19  16.33
SO BUILDWID COOL5    19.64  24.13  27.89 124.20 108.64  89.77
SO BUILDWID COOL5    68.17  44.51  19.49  35.05  59.32  81.80
SO BUILDWID COOL5   101.79 118.68 131.97  25.41 146.24 146.79
SO BUILDWID COOL5   146.95  24.13  27.89 124.20 108.64  89.77
SO BUILDWID COOL5    68.17  44.51  19.49  35.05  59.32  81.80
SO BUILDLEN COOL5    30.80  32.78  33.76  33.71  32.64  30.58
SO BUILDLEN COOL5    31.83  33.25  33.66 101.79 118.68 131.97
SO BUILDLEN COOL5   141.25 146.24 146.79 146.95 143.66 136.00
SO BUILDLEN COOL5   124.20 108.64  89.77  33.71  44.51  19.49
SO BUILDLEN COOL5    35.05  33.25  33.66 101.79 118.68 131.97
SO BUILDLEN COOL5   141.25 146.24 146.79 146.95 143.66 136.00
SO XBADJ   COOL5   -87.13 -90.72 -91.55 -89.60 -75.58 -76.23
SO XBADJ   COOL5   -76.74 -75.42 -71.80 -46.47 -54.00 -59.89
SO XBADJ   COOL5   -63.95 -66.08 -66.20 -66.28 -64.91 -61.57
SO XBADJ   COOL5   -56.37 -49.45 -41.02  38.93 -20.73  -9.48
SO XBADJ   COOL5   -18.51  42.17  38.14 -55.32 -64.69 -72.09
SO XBADJ   COOL5   -77.30 -80.16 -80.59 -80.68 -78.75 -74.42
SO YBADJ   COOL5    21.25   8.45  -4.61 -17.52  14.79   4.26
SO YBADJ   COOL5    -6.31 -16.77 -26.72  -5.74  -4.87  -3.86
SO YBADJ   COOL5    -2.73  -1.52  -0.26   0.99   2.21   3.37
SO YBADJ   COOL5     4.42   5.34   6.10 -24.87   7.04   7.20
SO YBADJ   COOL5     7.20  16.77  26.72   5.74   4.87   3.86
SO YBADJ   COOL5     2.73   1.52   0.26  -0.99  -2.21  -3.37

SO BUILDHGT COOL6    27.74  27.74  27.74  27.74  27.74  10.67
SO BUILDHGT COOL6    27.74  27.74  27.74  27.74  10.67  10.67
SO BUILDHGT COOL6    10.67  10.67  10.67  10.67  10.67  10.67
SO BUILDHGT COOL6    27.74  27.74  27.74  27.74  10.67  10.67
SO BUILDHGT COOL6    10.67  27.74  27.74  27.74  10.67  10.67
SO BUILDHGT COOL6    10.67  10.67  10.67  10.67  10.67  10.67
SO BUILDWID COOL6    33.05  31.43  28.86  25.41  21.19 146.79
SO BUILDWID COOL6    19.64  24.13  27.89  30.80 108.64  89.77
SO BUILDWID COOL6    68.17  44.51  19.49  35.05  59.32  81.80
SO BUILDWID COOL6    33.05  31.43  28.86  25.41 146.24 146.79
SO BUILDWID COOL6   146.95  24.13  27.89  30.80 108.64  89.77
SO BUILDWID COOL6    68.17  44.51  19.49  35.05  59.32  81.80
SO BUILDLEN COOL6    30.80  32.78  33.76  33.71  32.64  19.49
SO BUILDLEN COOL6    31.83  33.25  33.66  33.05 118.68 131.97
SO BUILDLEN COOL6   141.25 146.24 146.79 146.95 143.66 136.00
SO BUILDLEN COOL6    30.80  32.78  33.76  33.71  44.51  19.49
SO BUILDLEN COOL6    35.05  33.25  33.66  33.05 118.68 131.97
SO BUILDLEN COOL6   141.25 146.24 146.79 146.95 143.66 136.00
SO XBADJ   COOL6   -75.62 -80.96 -83.84 -84.16 -81.94  -9.56
SO XBADJ   COOL6   -78.84 -80.00 -78.73 -75.07 -64.93 -72.35
SO XBADJ   COOL6   -77.56 -80.43 -80.84 -80.78 -78.83 -74.49
SO XBADJ   COOL6    44.82  48.18  50.08  50.45 -23.72  -9.93
SO XBADJ   COOL6   -16.41  46.76  45.07  42.03 -53.75 -59.63
SO XBADJ   COOL6   -63.69 -65.82 -65.94 -66.17 -64.83 -61.51
SO YBADJ   COOL6    30.32  19.38   7.85  -3.91 -15.56   7.45
SO YBADJ   COOL6     8.19  -2.85 -13.80 -24.34   4.89   3.85
SO YBADJ   COOL6     2.70   1.47   0.19  -1.11  -2.37  -3.56
SO YBADJ   COOL6   -30.32 -19.38  -7.85   3.91  -7.30  -7.45
SO YBADJ   COOL6    -7.30   2.85  13.80  24.34  -4.89  -3.85
SO YBADJ   COOL6    -2.70  -1.47  -0.19   1.11   2.37   3.56

SO BUILDHGT COOL7    10.67  10.67  27.74  27.74  27.74  27.74
SO BUILDHGT COOL7    10.67  27.74  27.74  27.74  27.74  10.67
SO BUILDHGT COOL7    10.67  10.67  10.67  10.67  10.67  10.67
SO BUILDHGT COOL7    10.67  10.67  27.74  27.74  10.67  10.67
SO BUILDHGT COOL7    10.67  10.67  27.74  27.74  27.74  10.67
SO BUILDHGT COOL7    10.67  10.67  10.67  10.67  10.67  10.67
SO BUILDWID COOL7   101.79 118.68  28.86  25.41  21.19  16.32
SO BUILDWID COOL7   146.95  24.13  27.89  30.80  32.78  89.77
SO BUILDWID COOL7    68.17  44.51  19.49  35.05  59.32  81.80
```

```
SO BUILDWID COOL7    101.79 118.68  28.86  25.41 146.24 146.79
SO BUILDWID COOL7    146.95 143.66  27.89  30.80  32.78  89.77
SO BUILDWID COOL7     68.17  44.51  19.49  35.05  59.32  81.80
SO BUILDLEN COOL7    124.20 108.64  33.76  33.71  32.64  30.58
SO BUILDLEN COOL7     35.05  33.25  33.66  33.05  31.43 131.97
SO BUILDLEN COOL7    141.25 146.24 146.79 146.95 143.66 136.00
SO BUILDLEN COOL7    124.20 108.64  33.76  33.71  44.51  19.49
SO BUILDLEN COOL7     35.05  59.32  33.66  33.05  31.43 131.97
SO BUILDLEN COOL7    141.25 146.24 146.79 146.95 143.66 136.00
SO XBADJ    COOL7   -44.88 -39.72 -76.16 -78.76 -78.96 -76.76
SO XBADJ    COOL7   -20.71 -84.55 -85.61 -84.07 -79.98 -84.72
SO XBADJ    COOL7   -91.08 -94.67 -95.39 -95.19 -92.66 -87.31
SO XBADJ    COOL7   -79.32 -68.91  42.40  45.04 -26.70 -10.39
SO XBADJ    COOL7   -14.34 -22.74  51.95  51.02  48.55 -47.26
SO XBADJ    COOL7   -50.18 -51.57 -51.40 -51.77 -51.00 -48.68
SO YBADJ    COOL7    13.65  16.44  20.22   9.60  -1.31 -12.18
SO YBADJ    COOL7    21.71  10.98  -0.98 -12.90 -24.43  11.53
SO YBADJ    COOL7     8.11   4.45   0.65  -3.18  -6.92 -10.44
SO YBADJ    COOL7   -13.65 -16.44 -20.22  -9.60 -21.55 -22.00
SO YBADJ    COOL7   -21.71 -20.83   0.98  12.90  24.43 -11.53
SO YBADJ    COOL7    -8.11  -4.45  -0.65   3.18   6.92  10.44

SO BUILDHGT COOL8     10.67  10.67  10.67  27.74  27.74  27.74
SO BUILDHGT COOL8     27.74  27.74  27.74  27.74  27.74  27.74
SO BUILDHGT COOL8     10.67  10.67  10.67  10.67  10.67  10.67
SO BUILDHGT COOL8     10.67  10.67  10.67  27.74  10.67  10.67
SO BUILDHGT COOL8     10.67  27.74  10.67  10.67  10.67  10.67
SO BUILDHGT COOL8     10.67  10.67  10.67  10.67  10.67  10.67
SO BUILDWID COOL8    101.79 118.68 131.97  25.41  21.19  16.32
SO BUILDWID COOL8     19.64  24.13  27.89  30.80  32.78  33.76
SO BUILDWID COOL8     68.17  44.51  19.49  35.05  59.32  81.80
SO BUILDWID COOL8    101.79 118.68 131.97  25.41 146.24 146.79
SO BUILDWID COOL8    146.95  24.13 136.00 124.20 108.64  89.77
SO BUILDWID COOL8     68.17  44.51  19.49  35.05  59.32  81.80
SO BUILDLEN COOL8    124.20 108.64  89.77  33.71  32.64  30.58
SO BUILDLEN COOL8     31.83  33.25  33.66  33.05  31.43  28.86
SO BUILDLEN COOL8    141.25 146.24 146.79 146.95 143.66 136.00
SO BUILDLEN COOL8    124.20 108.64  89.77  33.71  44.51  19.49
SO BUILDLEN COOL8     35.05  33.25  81.80 101.79 118.68 131.97
SO BUILDLEN COOL8    141.25 146.24 146.79 146.95 143.66 136.00
SO XBADJ    COOL8   -33.18 -29.80 -25.50 -73.21 -75.89 -76.27
SO XBADJ    COOL8   -76.51 -74.91 -92.62 -93.25 -91.05 -86.08
SO XBADJ    COOL8  -104.88 -109.23 -110.25 -109.91 -106.79 -100.43
SO XBADJ    COOL8   -91.02 -78.84 -64.27  39.50 -29.76 -10.88
SO XBADJ    COOL8   -12.24  41.66 -23.45 -28.07 -31.83 -34.63
SO XBADJ    COOL8   -36.38 -37.02 -36.53 -37.04 -36.86 -35.56
SO YBADJ    COOL8    22.82  27.51  31.35  23.40  13.24   2.68
SO YBADJ    COOL8    -7.87 -18.26  12.14  -1.20 -14.50 -27.37
SO YBADJ    COOL8    13.65   7.51   1.14  -5.28 -11.54 -17.45
SO YBADJ    COOL8   -22.82 -27.51 -31.35 -23.40 -36.10 -36.86
SO YBADJ    COOL8   -36.43  18.26 -32.43 -28.92 -24.52 -19.38
SO YBADJ    COOL8   -13.65  -7.51  -1.14   5.28  11.54  17.45

SO BUILDHGT COOL9     10.67  10.67  10.67  10.67  10.67  10.67
SO BUILDHGT COOL9     27.74  27.74  27.74  27.74  27.74  27.74
SO BUILDHGT COOL9     10.67  10.67  10.67  10.67  10.67  10.67
SO BUILDHGT COOL9     10.67  10.67  10.67  10.67  10.67  10.67
SO BUILDHGT COOL9     10.67  27.74  27.74  27.74  10.67  10.67
SO BUILDHGT COOL9     10.67  10.67  10.67  10.67  10.67  10.67
SO BUILDWID COOL9    101.79 118.68 131.97 141.25 146.24 146.79
SO BUILDWID COOL9     19.64  24.13  27.89  30.80  32.78  33.76
SO BUILDWID COOL9     68.17  44.51  19.49  35.05  59.32  81.80
SO BUILDWID COOL9    101.79 118.68 131.97 141.25 146.24 146.79
SO BUILDWID COOL9    146.95  24.13  27.89  30.80 108.64  89.77
SO BUILDWID COOL9     68.17  44.51  19.49  35.05  59.32  81.80
SO BUILDLEN COOL9    124.20 108.64  89.77  68.17  44.51  19.49
SO BUILDLEN COOL9     31.83  33.25  33.66  33.05  31.43  28.86
SO BUILDLEN COOL9    141.25 146.24 146.79 146.95 143.66 136.00
SO BUILDLEN COOL9    124.20 108.64  89.77  68.17  44.51  19.49
SO BUILDLEN COOL9     35.05  33.25  33.66  33.05 118.68 131.97
SO BUILDLEN COOL9    141.25 146.24 146.79 146.95 143.66 136.00
SO XBADJ    COOL9   -21.82 -20.15 -17.85 -15.02 -11.73  -8.08
SO XBADJ    COOL9   -78.49 -79.34 -99.36 -102.10 -101.73 -98.28
SO XBADJ    COOL9  -118.22 -123.31 -124.64 -124.17 -120.49 -113.15
SO XBADJ    COOL9  -102.38 -88.49 -71.92 -53.15 -32.78 -11.41
SO XBADJ    COOL9   -10.26  46.09  44.13  40.82 -21.15 -22.43
SO XBADJ    COOL9   -23.04 -22.94 -22.14 -22.78 -23.16 -22.84
```

```
SO YBADJ    COOL9     31.67  38.19  43.55  47.59  50.18  51.25
SO YBADJ    COOL9      6.39  -4.56  24.86  10.16  -4.85  -19.72
SO YBADJ    COOL9     19.07  10.52   1.66  -7.27 -15.97  -24.19
SO YBADJ    COOL9    -31.67 -38.19 -43.55 -47.59 -50.18  -51.25
SO YBADJ    COOL9    -50.69   4.56  15.37  25.72 -34.17  -27.03
SO YBADJ    COOL9    -19.07 -10.52  -1.66   7.27  15.97   24.19


SO BUILDHGT COOL10    10.67  10.67  10.67  10.67  10.67  10.67
SO BUILDHGT COOL10    10.67  27.74  27.74  27.74  27.74  27.74
SO BUILDHGT COOL10    27.74  10.67  10.67  10.67  10.67  10.67
SO BUILDHGT COOL10    10.67  10.67  10.67  10.67  10.67  10.67
SO BUILDHGT COOL10    10.67  10.67  27.74  27.74  27.74  10.67
SO BUILDHGT COOL10    10.67  10.67  10.67  10.67  10.67  10.67
SO BUILDWID COOL10   101.79 118.68 131.97 141.25 146.24 146.79
SO BUILDWID COOL10   146.95  24.13  27.89  30.80  32.78  33.76
SO BUILDWID COOL10    33.71  44.51  19.49  35.05  59.32  81.80
SO BUILDWID COOL10   101.79 118.68 131.97 141.25 146.24 146.79
SO BUILDWID COOL10   146.95 143.66  27.89  30.80  32.78  89.77
SO BUILDWID COOL10    68.17  44.51  19.49  35.05  59.32  81.80
SO BUILDLEN COOL10   124.20 108.64  89.77  68.17  44.51  19.49
SO BUILDLEN COOL10    35.05  33.25  33.66  33.05  31.43  28.86
SO BUILDLEN COOL10    25.41 146.24 146.79 146.95 143.66 136.00
SO BUILDLEN COOL10   124.20 108.64  89.77  68.17  44.51  19.49
SO BUILDLEN COOL10    35.05  59.32  33.66  33.05  31.43 131.97
SO BUILDLEN COOL10   141.25 146.24 146.79 146.95 143.66 136.00
SO XBADJ    COOL10   -10.24 -10.32 -10.09  -9.55  -8.71  -7.62
SO XBADJ    COOL10   -26.89 -83.95 -84.75 -111.21 -112.72 -110.81
SO XBADJ    COOL10  -105.53 -137.73 -139.38 -138.76 -134.50 -126.15
SO XBADJ    COOL10  -113.96 -98.32 -79.68 -58.63 -35.79 -11.87
SO XBADJ    COOL10    -8.16  -9.09  51.09  49.93  47.26  -9.91
SO XBADJ    COOL10    -9.35  -8.51  -7.41  -8.19  -9.16  -9.85
SO YBADJ    COOL10    40.79  49.18  56.08  61.28  64.61  65.98
SO YBADJ    COOL10    65.28   9.44  -2.38  21.75   4.97 -11.95
SO YBADJ    COOL10   -28.51  13.54   2.13  -9.37 -20.57 -31.15
SO YBADJ    COOL10   -40.79 -49.18 -56.08 -61.28 -64.61 -65.98
SO YBADJ    COOL10   -65.28 -62.67   2.38  14.14  25.46 -34.80
SO YBADJ    COOL10   -24.54 -13.54  -2.13   9.37  20.57  31.15


SO BUILDHGT FGH       0.00   0.00   0.00   0.00   0.00   0.00
SO BUILDHGT FGH       0.00   0.00   0.00   0.00   0.00   0.00
SO BUILDHGT FGH       0.00   0.00   0.00   0.00   0.00   0.00
SO BUILDHGT FGH       0.00   0.00   0.00   0.00   0.00   0.00
SO BUILDHGT FGH       0.00   0.00   0.00  27.74  27.74  27.74
SO BUILDHGT FGH       0.00   0.00   0.00   0.00   0.00   0.00
SO BUILDWID FGH       0.00   0.00   0.00   0.00   0.00   0.00
SO BUILDWID FGH       0.00   0.00   0.00   0.00   0.00   0.00
SO BUILDWID FGH       0.00   0.00   0.00   0.00   0.00   0.00
SO BUILDWID FGH       0.00   0.00   0.00   0.00   0.00   0.00
SO BUILDWID FGH       0.00   0.00   0.00  30.80  32.78  33.76
SO BUILDWID FGH       0.00   0.00   0.00   0.00   0.00   0.00
SO BUILDLEN FGH       0.00   0.00   0.00   0.00   0.00   0.00
SO BUILDLEN FGH       0.00   0.00   0.00   0.00   0.00   0.00
SO BUILDLEN FGH       0.00   0.00   0.00   0.00   0.00   0.00
SO BUILDLEN FGH       0.00   0.00   0.00   0.00   0.00   0.00
SO BUILDLEN FGH       0.00   0.00   0.00  33.05  31.43  28.86
SO BUILDLEN FGH       0.00   0.00   0.00   0.00   0.00   0.00
SO XBADJ    FGH       0.00   0.00   0.00   0.00   0.00   0.00
SO XBADJ    FGH       0.00   0.00   0.00   0.00   0.00   0.00
SO XBADJ    FGH       0.00   0.00   0.00   0.00   0.00   0.00
SO XBADJ    FGH       0.00   0.00   0.00   0.00   0.00   0.00
SO XBADJ    FGH       0.00   0.00   0.00 -155.91 -157.43 -154.16
SO XBADJ    FGH       0.00   0.00   0.00   0.00   0.00   0.00
SO YBADJ    FGH       0.00   0.00   0.00   0.00   0.00   0.00
SO YBADJ    FGH       0.00   0.00   0.00   0.00   0.00   0.00
SO YBADJ    FGH       0.00   0.00   0.00   0.00   0.00   0.00
SO YBADJ    FGH       0.00   0.00   0.00   0.00   0.00   0.00
SO YBADJ    FGH       0.00   0.00   0.00  25.45   0.86 -23.76
SO YBADJ    FGH       0.00   0.00   0.00   0.00   0.00   0.00

  SRCGROUP ALL

SO FINISHED
**
****************************************
** AERMOD Receptor Pathway
****************************************
**
```

```
**
RE STARTING
  INCLUDED liveoak.rou
RE FINISHED
**
****************************************
** AERMOD Meteorology Pathway
****************************************
**
**
ME STARTING
  SURFFILE ..\metdata2\SAVCHS90.SFC
  PROFFILE ..\metdata2\SAVCHS90.PFL
  SURFDATA 03822 1990 SAVANNAH/MUNICIPAL_ARPT
  UAIRDATA 13880 1990 CHARLESTON/INT'L_ARPT
  PROFBASE 46 FEET
ME FINISHED
**
****************************************
** AERMOD Output Pathway
****************************************
**
**
OU STARTING
  RECTABLE ALLAVE FIRST
OU FINISHED
```

AERBOB RELEASE 020304
AERMOD OUTPUT FILE NUMBER 1 :pmsig.o90
AERMOD OUTPUT FILE NUMBER 2 :pmsig.o91
AERMOD OUTPUT FILE NUMBER 3 :pmsig.o92
AERMOD OUTPUT FILE NUMBER 4 :pmsig.o93
AERMOD OUTPUT FILE NUMBER 5 :pmsig.o94
First title for last output file is: 1990 LIVE OAKS PM10 CLASS II SIG ANALYSIS 11/3/08
Second title for last output file is: SAVANNAH/CHARLESTON, 1990-94 MET, CTS AT BASE LOAD, 95 DEG, DB

AVERAGING TIME	YEAR	CONC (ug/m3)	X (m)	Y (m)	PERIOD ENDING (YYMMDDHH)
SOURCE GROUP ID: ALL					
Annual					
	1990	0.14132	447400.	3461000.	90123124
	1991	0.14879	447400.	3461000.	91123124
	1992	0.15261	447400.	3461000.	92123124
	1993	0.14506	447400.	3461000.	93123124
	1994	0.12082	447400.	3461000.	94123124
HIGH 24-Hour					
	1990	1.33069	446999.	3461287.	90022424
	1991	1.83644	447400.	3461000.	91030424
	1992	1.46489	447400.	3460800.	92031124
	1993	1.91185	447400.	3461000.	93103124
	1994	1.55037	447600.	3461100.	94010424

All receptor computations reported with respect to a user-specified origin
GRID 0.00 0.00
DISCRETE 0.00 0.00

CALPUFF INPUT MAXIMUM EMISSIONS

```
SITHE-GLOBAL LIVE OAKS, CALPUFF V 5.8                11/3/08
2 CTS ON NATURAL GAS + HEATER FOR REGIONAL HAZE AND CONC AT OKEFENOKEE NWA
4-km FLORIDA DOMAIN, 2001, IMPACTS AT OKEFENOKEE NWAS
---------------- Run title (3 lines) ----------------------------------------

                CALPUFF MODEL CONTROL FILE
                --------------------------

-------------------------------------------------------------------------------

INPUT GROUP: 0 -- Input and Output File Names

--------------
Default Name  Type          File Name
------------  ----          ---------
CALMET.DAT    input    * METDAT =          *
   or
ISCMET.DAT    input    * ISCDAT =          *
   or
PLMMET.DAT    input    * PLMDAT =          *
   or
PROFILE.DAT   input    * PRFDAT =          *
SURFACE.DAT   input    * SFCDAT =          *
RESTARTB.DAT  input    * RSTARTB=          *
-------------------------------------------------------------------------------
CALPUFF.LST   output   ! PUFLST = PUFFMAX.LST !
CONC.DAT      output   ! CONDAT = PUFFMAX.CON !
DFLX.DAT      output   * DFDAT  =          *
WFLX.DAT      output   * WFDAT  =          *

VISB.DAT      output   ! VISDAT = VISB.DAT   !
RESTARTE.DAT  output   * RSTARTE=          *
-------------------------------------------------------------------------------
Emission Files
--------------
PTEMARB.DAT   input    * PTDAT  =          *
VOLEMARB.DAT  input    * VOLDAT =          *
BAEMARB.DAT   input    * ARDAT  =          *
LNEMARB.DAT   input    * LNDAT  =          *
-------------------------------------------------------------------------------
Other Files
-----------
OZONE.DAT     input    ! OZDAT  =C:\BARTHRO3\2001FLoz.DAT !
VD.DAT        input    * VDDAT  =          *
CHEM.DAT      input    * CHEMDAT=          *
H2O2.DAT      input    * H2O2DAT=          *
HILL.DAT      input    * HILDAT=           *
HILLRCT.DAT   input    * RCTDAT=           *
COASTLN.DAT   input    * CSTDAT=           *
FLUXBDY.DAT   input    * BDYDAT=           *
BCON.DAT      input    * BCNDAT=           *
DEBUG.DAT     output   * DEBUG =           *
MASSFLX.DAT   output   * FLXDAT=           *
MASSBAL.DAT   output   * BALDAT=           *
FOG.DAT       output   * FOGDAT=           *
-------------------------------------------------------------------------------
All file names will be converted to lower case if LCFILES = T
Otherwise, if LCFILES = F, file names will be converted to UPPER CASE
      T = lower case      ! LCFILES = T !
      F = UPPER CASE
NOTE: (1) file/path names can be up to 70 characters in length


Provision for multiple input files
----------------------------------

   Number of CALMET.DAT files for run (NMETDAT)
                        Default: 1      ! NMETDAT =  12  !

   Number of PTEMARB.DAT files for run (NPTDAT)
                        Default: 0      ! NPTDAT =  0  !

   Number of BAEMARB.DAT files for run (NARDAT)
                        Default: 0      ! NARDAT =  0  !

   Number of VOLEMARB.DAT files for run (NVOLDAT)
                        Default: 0      ! NVOLDAT =  0  !

!END!
```

```
-------------
Subgroup (0a)
-------------

 The following CALMET.DAT filenames are processed in sequence if NMETDAT>1

Default Name  Type        File Name
------------  ----        ---------
CALMET.DAT    input   ! METDAT =d:\2001-DOM2EPA\met2001-dom2-JAN.dat ! !END!
CALMET.DAT    input   ! METDAT =d:\2001-DOM2EPA\met2001-dom2-feb.dat ! !END!
CALMET.DAT    input   ! METDAT =d:\2001-DOM2EPA\met2001-dom2-mar.dat ! !END!
CALMET.DAT    input   ! METDAT =d:\2001-DOM2EPA\met2001-dom2-apr.dat ! !END!
CALMET.DAT    input   ! METDAT =d:\2001-DOM2EPA\met2001-dom2-may.dat ! !END!
CALMET.DAT    input   ! METDAT =d:\2001-DOM2EPA\met2001-dom2-jun.dat ! !END!
CALMET.DAT    input   ! METDAT =d:\2001-DOM2EPA\met2001-dom2-jul.dat ! !END!
CALMET.DAT    input   ! METDAT =d:\2001-DOM2EPA\met2001-dom2-aug.dat ! !END!
CALMET.DAT    input   ! METDAT =d:\2001-DOM2EPA\met2001-dom2-sep.dat ! !END!
CALMET.DAT    input   ! METDAT =d:\2001-DOM2EPA\met2001-dom2-oct.dat ! !END!
CALMET.DAT    input   ! METDAT =d:\2001-DOM2EPA\met2001-dom2-nov.dat ! !END!
CALMET.DAT    input   ! METDAT =d:\2001-DOM2EPA\met2001-dom2-dec.dat ! !END!
-------------------------------------------------------------------------------

INPUT GROUP: 1 -- General run control parameters
---------------

   Option to run all periods found
   in the met. file     (METRUN)   Default: 0       ! METRUN =   0  !

      METRUN = 0 - Run period explicitly defined below
      METRUN = 1 - Run all periods in met. file

   Starting date:   Year (IBYR) -- No default       ! IBYR =  2001 !
   (used only if   Month (IBMO) -- No default       ! IBMO =  1  !
    METRUN = 0)     Day (IBDY) -- No default        ! IBDY =  1  !
                  Hour (IBHR) -- No default        ! IBHR =  1  !

   Note: IBHR is the time at the END of the first hour of the simulation
       (IBHR=1, the first hour of a day, runs from 00:00 to 01:00)

   Base time zone       (XBTZ) -- No default       ! XBTZ = 5.0  !
   The zone is the number of hours that must be
   ADDED to the time to obtain UTC (or GMT)
   Examples: PST = 8., MST = 7.
          CST = 6., EST = 5.

   Length of run (hours) (IRLG) -- No default       ! IRLG = 8760 !

   Number of chemical species (NSPEC)
                          Default: 5       ! NSPEC = 12 !

   Number of chemical species
   to be emitted  (NSE)          Default: 3       ! NSE = 10  !

   Flag to stop run after
   SETUP phase (ITEST)           Default: 2       ! ITEST =  2   !
   (Used to allow checking
   of the model inputs, files, etc.)
       ITEST = 1 - STOPS program after SETUP phase
       ITEST = 2 - Continues with execution of program
                after SETUP

   Restart Configuration:

     Control flag (MRESTART)     Default: 0       ! MRESTART =  0   !

       0 = Do not read or write a restart file
       1 = Read a restart file at the beginning of
          the run
       2 = Write a restart file during run
       3 = Read a restart file at beginning of run
          and write a restart file during run

     Number of periods in Restart
     output cycle (NRESPD)       Default: 0       ! NRESPD =  0   !

       0 = File written only at last period
      >0 = File updated every NRESPD periods
```

```
   Meteorological Data Format (METFM)
                        Default: 1      ! METFM =  1   !

       METFM = 1 - CALMET binary file (CALMET.MET)
       METFM = 2 - ISC ASCII file (ISCMET.MET)
       METFM = 3 - AUSPLUME ASCII file (PLMMET.MET)
       METFM = 4 - CTDM plus tower file (PROFILE.DAT) and
               surface parameters file (SURFACE.DAT)
       METFM = 5 - AERMET tower file (PROFILE.DAT) and
               surface parameters file (SURFACE.DAT)

   Meteorological Profile Data Format (MPRFFM)
        (used only for METFM = 1, 2, 3)
                        Default: 1      ! MPRFFM =  1   !

       MPRFFM = 1 - CTDM plus tower file (PROFILE.DAT)
       MPRFFM = 2 - AERMET tower file (PROFILE.DAT)

   PG sigma-y is adjusted by the factor (AVET/PGTIME)**0.2
   Averaging Time (minutes) (AVET)
                        Default: 60.0    ! AVET = 60. !
   PG Averaging Time (minutes) (PGTIME)
                        Default: 60.0    ! PGTIME = 60. !


!END!


-----------------------------------------------------------------------------

INPUT GROUP: 2 -- Technical options
--------------


   Vertical distribution used in the
   near field (MGAUSS)              Default: 1     ! MGAUSS =  1   !
     0 = uniform
     1 = Gaussian

   Terrain adjustment method
   (MCTADJ)                         Default: 3     ! MCTADJ =  3   !
     0 = no adjustment
     1 = ISC-type of terrain adjustment
     2 = simple, CALPUFF-type of terrain
        adjustment
     3 = partial plume path adjustment

   Subgrid-scale complex terrain
   flag (MCTSG)                     Default: 0     ! MCTSG =  0   !
     0 = not modeled
     1 = modeled

   Near-field puffs modeled as
   elongated slugs? (MSLUG)         Default: 0     ! MSLUG =  0   !
     0 = no
     1 = yes (slug model used)

   Transitional plume rise modeled ?
   (MTRANS)                         Default: 1     ! MTRANS =  1   !
     0 = no  (i.e., final rise only)
     1 = yes (i.e., transitional rise computed)

   Stack tip downwash? (MTIP)       Default: 1     ! MTIP =  1  !
     0 = no  (i.e., no stack tip downwash)
     1 = yes (i.e., use stack tip downwash)

   Method used to simulate building
   downwash? (MBDW)                 Default: 1     ! MBDW =  1  !
     1 = ISC method
     2 = PRIME method

   Vertical wind shear modeled above
   stack top? (MSHEAR)              Default: 0     ! MSHEAR =  0  !
     0 = no  (i.e., vertical wind shear not modeled)
     1 = yes (i.e., vertical wind shear modeled)

   Puff splitting allowed? (MSPLIT)  Default: 0    ! MSPLIT =  0  !
     0 = no (i.e., puffs not split)
     1 = yes (i.e., puffs are split)
```

Chemical mechanism flag (MCHEM) Default: 1 ! MCHEM = 1 !
0 = chemical transformation not modeled
1 = transformation rates computed internally (MESOPUFF II scheme)
2 = user-specified transformation rates used
3 = transformation rates computed internally (RIVAD/ARM3 scheme)
4 = secondary organic aerosol formation computed (MESOPUFF II scheme for OH)

Aqueous phase transformation flag (MAQCHEM)
(Used only if MCHEM = 1, or 3) Default: 0 ! MAQCHEM = 0 !
0 = aqueous phase transformation not modeled
1 = transformation rates adjusted for aqueous phase reactions

Wet removal modeled ? (MWET) Default: 1 ! MWET = 1 !
0 = no
1 = yes

Dry deposition modeled ? (MDRY) Default: 1 ! MDRY = 1 !
0 = no
1 = yes
(dry deposition method specified for each species in Input Group 3)

Gravitational settling (plume tilt)
modeled ? (MTILT) Default: 0 ! MTILT = 0 !
0 = no
1 = yes
(puff center falls at the gravitational settling velocity for 1 particle species)

Restrictions:
- MDRY = 1
- NSPEC = 1 (must be particle species as well)
- sg = 0 GEOMETRIC STANDARD DEVIATION in Group 8 is set to zero for a single particle diameter

Method used to compute dispersion
coefficients (MDISP) Default: 3 ! MDISP = 3 !

1 = dispersion coefficients computed from measured values of turbulence, sigma v, sigma w
2 = dispersion coefficients from internally calculated sigma v, sigma w using micrometeorological variables (u*, w*, L, etc.)
3 = PG dispersion coefficients for RURAL areas (computed using the ISCST multi-segment approximation) and MP coefficients in urban areas
4 = same as 3 except PG coefficients computed using the MESOPUFF II eqns.
5 = CTDM sigmas used for stable and neutral conditions. For unstable conditions, sigmas are computed as in MDISP = 3, described above. MDISP = 5 assumes that measured values are read

Sigma-v/sigma-theta, sigma-w measurements used? (MTURBVW)
(Used only if MDISP = 1 or 5) Default: 3 ! MTURBVW = 3 !
1 = use sigma-v or sigma-theta measurements from PROFILE.DAT to compute sigma-y (valid for METFM = 1, 2, 3, 4, 5)
2 = use sigma-w measurements from PROFILE.DAT to compute sigma-z (valid for METFM = 1, 2, 3, 4, 5)
3 = use both sigma-(v/theta) and sigma-w from PROFILE.DAT to compute sigma-y and sigma-z (valid for METFM = 1, 2, 3, 4, 5)
4 = use sigma-theta measurements from PLMMET.DAT to compute sigma-y (valid only if METFM = 3)

Back-up method used to compute dispersion
when measured turbulence data are

missing (MDISP2) Default: 3 ! MDISP2 = 3 !
(used only if MDISP = 1 or 5)
2 = dispersion coefficients from internally calculated
sigma v, sigma w using micrometeorological variables
(u*, w*, L, etc.)
3 = PG dispersion coefficients for RURAL areas (computed using
the ISCST multi-segment approximation) and MP coefficients in
urban areas
4 = same as 3 except PG coefficients computed using
the MESOPUFF II eqns.

[DIAGNOSTIC FEATURE]
Method used for Lagrangian timescale for Sigma-y
(used only if MDISP=1,2 or MDISP2=1,2)
(MTAULY) Default: 0 ! MTAULY = 0 !
0 = Draxler default 617.284 (s)
1 = Computed as Lag. Length / (.75 q) -- after SCIPUFF
10 < Direct user input (s) -- e.g., 306.9

[DIAGNOSTIC FEATURE]
Method used for Advective-Decay timescale for Turbulence
(used only if MDISP=2 or MDISP2=2)
(MTAUADV) Default: 0 ! MTAUADV = 0 !
0 = No turbulence advection
1 = Computed (OPTION NOT IMPLEMENTED)
10 < Direct user input (s) -- e.g., 300

Method used to compute turbulence sigma-v &
sigma-w using micrometeorological variables
(Used only if MDISP = 2 or MDISP2 = 2)
(MCTURB) Default: 1 ! MCTURB = 1 !
1 = Standard CALPUFF subroutines
2 = AERMOD subroutines

PG sigma-y,z adj. for roughness? Default: 0 ! MROUGH = 0 !
(MROUGH)
0 = no
1 = yes

Partial plume penetration of Default: 1 ! MPARTL = 1 !
elevated inversion?
(MPARTL)
0 = no
1 = yes

Strength of temperature inversion Default: 0 ! MTINV = 0 !
provided in PROFILE.DAT extended records?
(MTINV)
0 = no (computed from measured/default gradients)
1 = yes

PDF used for dispersion under convective conditions?
Default: 0 ! MPDF = 0 !
(MPDF)
0 = no
1 = yes

Sub-Grid TIBL module used for shore line?
Default: 0 ! MSGTIBL = 0 !
(MSGTIBL)
0 = no
1 = yes

Boundary conditions (concentration) modeled?
Default: 0 ! MBCON = 0 !
(MBCON)
0 = no
1 = yes, using formatted BCON.DAT file
2 = yes, using unformatted CONC.DAT file

Note: MBCON > 0 requires that the last species modeled
be 'BCON'. Mass is placed in species BCON when
generating boundary condition puffs so that clean
air entering the modeling domain can be simulated
in the same way as polluted air. Specify zero
emission of species BCON for all regular sources.

Individual source contributions saved?
Default: 0 ! MSOURCE = 0 !
(MSOURCE)
0 = no
1 = yes

Analyses of fogging and icing impacts due to emissions from arrays of mechanically-forced cooling towers can be performed using CALPUFF in conjunction with a cooling tower emissions processor (CTEMISS) and its associated postprocessors. Hourly emissions of water vapor and temperature from each cooling tower cell are computed for the current cell configuration and ambient conditions by CTEMISS. CALPUFF models the dispersion of these emissions and provides cloud information in a specialized format for further analysis. Output to FOG.DAT is provided in either 'plume mode' or 'receptor mode' format.

Configure for FOG Model output?
Default: 0 ! MFOG = 0 !
(MFOG)
0 = no
1 = yes - report results in PLUME Mode format
2 = yes - report results in RECEPTOR Mode format

Test options specified to see if
they conform to regulatory
values? (MREG) Default: 1 ! MREG = 1 !

0 = NO checks are made
1 = Technical options must conform to USEPA
Long Range Transport (LRT) guidance
METFM 1 or 2
AVET 60. (min)
PGTIME 60. (min)
MGAUSS 1
MCTADJ 3
MTRANS 1
MTIP 1
MCHEM 1 or 3 (if modeling SOx, NOx)
MWET 1
MDRY 1
MDISP 2 or 3
MPDF 0 if MDISP=3
1 if MDISP=2
MROUGH 0
MPARTL 1
SYTDEP 550. (m)
MHFTSZ 0
SVMIN 0.5 (m/s)

!END!

INPUT GROUP: 3a, 3b -- Species list

Subgroup (3a)

The following species are modeled:

```
! CSPEC =      SO2 !      !END!
! CSPEC =      SO4 !      !END!
! CSPEC =      NOX !      !END!
! CSPEC =     HNO3 !      !END!
! CSPEC =      NO3 !      !END!
! CSPEC =   PM0063 !      !END!
! CSPEC =   PM0100 !      !END!
! CSPEC =   PM0125 !      !END!
! CSPEC =   PM0250 !      !END!
! CSPEC =   PM0600 !      !END!
! CSPEC =   PM1000 !      !END!
! CSPEC =       CO !      !END!
```

```
                                   Dry          OUTPUT GROUP
  SPECIES       MODELED        EMITTED      DEPOSITED          NUMBER
   NAME      (0=NO, 1=YES)   (0=NO, 1=YES)   (0=NO,          (0=NONE,
  (Limit: 12                   1=COMPUTED-GAS      1=1st CGRUP,
   Characters                   2=COMPUTED-PARTICLE  2=2nd CGRUP,
   in length)                  3=USER-SPECIFIED)    3= etc.)

!       SO2 =     1,          1,        1,          0  !
!       SO4 =     1,          1,        2,          0  !
!       NOX =     1,          1,        1,          0  !
!      HNO3 =     1,          0,        1,          0  !
!       NO3 =     1,          0,        2,          0  !
!    PM0063 =     1,          1,        2,          1  !
!    PM0100 =     1,          1,        2,          1  !
!    PM0125 =     1,          1,        2,          1  !
!    PM0250 =     1,          1,        2,          1  !
!    PM0600 =     1,          1,        2,          1  !
!    PM1000 =     1,          1,        2,          1  !
!        CO =     1,          1,        0,          0  !

!END!

-------------
Subgroup (3b)
-------------
 The following names are used for Species-Groups in which results
 for certain species are combined (added) prior to output.  The
 CGRUP name will be used as the species name in output files.
 Use this feature to model specific particle-size distributions
 by treating each size-range as a separate species.
 Order must be consistent with 3(a) above.

! CGRUP =        PM10 !    !END!

INPUT GROUP: 4 -- Map Projection and Grid control parameters
--------------

   Projection for all (X,Y):
   -------------------------

   Map projection
   (PMAP)                Default: UTM    ! PMAP = LCC  !

      UTM :  Universal Transverse Mercator
      TTM :  Tangential Transverse Mercator
      LCC :  Lambert Conformal Conic
       PS :  Polar Stereographic
       EM :  Equatorial Mercator
     LAZA :  Lambert Azimuthal Equal Area

   False Easting and Northing (km) at the projection origin
   (Used only if PMAP= TTM, LCC, or LAZA)
   (FEAST)               Default=0.0     ! FEAST  = 0.000  !
   (FNORTH)              Default=0.0     ! FNORTH = 0.000  !

   UTM zone (1 to 60)
   (Used only if PMAP=UTM)
   (IUTMZN)              No Default      ! IUTMZN =  0 !

   Hemisphere for UTM projection?
   (Used only if PMAP=UTM)
   (UTMHEM)              Default: N      ! UTMHEM = N  !
     N  :  Northern hemisphere projection
     S  :  Southern hemisphere projection

   Latitude and Longitude (decimal degrees) of projection origin
   (Used only if PMAP= TTM, LCC, PS, EM, or LAZA)
   (RLAT0)               No Default      ! RLAT0 =  40N !
   (RLON0)               No Default      ! RLON0 =  97W !

      TTM :  RLON0 identifies central (true N/S) meridian of projection
             RLAT0 selected for convenience
      LCC :  RLON0 identifies central (true N/S) meridian of projection
             RLAT0 selected for convenience
      PS  :  RLON0 identifies central (grid N/S) meridian of projection
             RLAT0 selected for convenience
      EM  :  RLON0 identifies central meridian of projection
             RLAT0 is REPLACED by 0.0N (Equator)
```

```
      LAZA:  RLON0 identifies longitude of tangent-point of mapping plane
             RLAT0 identifies latitude of tangent-point of mapping plane

   Matching parallel(s) of latitude (decimal degrees) for projection
   (Used only if PMAP= LCC or PS)
   (XLAT1)              No Default     ! XLAT1 = 33N  !
   (XLAT2)              No Default     ! XLAT2 = 45N  !

      LCC :  Projection cone slices through Earth's surface at XLAT1 and XLAT2
      PS  :  Projection plane slices through Earth at XLAT1
             (XLAT2 is not used)

   ----------
   Note:  Latitudes and longitudes should be positive, and include a
          letter N,S,E, or W indicating north or south latitude, and
          east or west longitude.  For example,
          35.9  N Latitude  =  35.9N
          118.7 E Longitude = 118.7E


   Datum-region
   ------------

   The Datum-Region for the coordinates is identified by a character
   string.  Many mapping products currently available use the model of the
   Earth known as the World Geodetic System 1984 (WGS-84).  Other local
   models may be in use, and their selection in CALMET will make its output
   consistent with local mapping products.  The list of Datum-Regions with
   official transformation parameters is provided by the National Imagery and
   Mapping Agency (NIMA).

   NIMA Datum - Regions(Examples)
   ------------------------------------------------------------------------------
   WGS-84    WGS-84 Reference Ellipsoid and Geoid, Global coverage (WGS84)
   NAS-C     NORTH AMERICAN 1927 Clarke 1866 Spheroid, MEAN FOR CONUS (NAD27)
   NAR-C     NORTH AMERICAN 1983 GRS 80 Spheroid, MEAN FOR CONUS (NAD83)
   NWS-84    NWS 6370KM Radius, Sphere
   ESR-S     ESRI REFERENCE 6371KM Radius, Sphere

   Datum-region for output coordinates
   (DATUM)                Default: WGS-84    ! DATUM = NWS-84 !


METEOROLOGICAL Grid:

   Rectangular grid defined for projection PMAP,
   with X the Easting and Y the Northing coordinate

      No. X grid cells (NX)     No default     ! NX = 263   !
      No. Y grid cells (NY)     No default     ! NY = 206   !
    No. vertical layers (NZ)    No default     ! NZ =  10   !

     Grid spacing (DGRIDKM)     No default     ! DGRIDKM = 4. !
                        Units: km

        Cell face heights
          (ZFACE(nz+1))     No defaults
                        Units: m
 * ZFACE = .0, 20.0, 40.0, 80.0, 160.0, 300.0, 600.0, 1000.0, 1500.0, 2200.0,
        3000.0 *
 ! ZFACE = 0.,20.,40.,80.,160.,320.,640.,1200.,2000.,3000.,4000. !

      Reference Coordinates
     of SOUTHWEST corner of
         grid cell(1, 1):

      X coordinate (XORIGKM)    No default     ! XORIGKM =  721.995 !
      Y coordinate (YORIGKM)    No default     ! YORIGKM = -1598.000 !
                        Units: km


COMPUTATIONAL Grid:

   The computational grid is identical to or a subset of the MET. grid.
   The lower left (LL) corner of the computational grid is at grid point
   (IBCOMP, JBCOMP) of the MET. grid.  The upper right (UR) corner of the
   computational grid is at grid point (IECOMP, JECOMP) of the MET. grid.
   The grid spacing of the computational grid is the same as the MET. grid.
```

X index of LL corner (IBCOMP) No default ! IBCOMP = 1 !
(1 <= IBCOMP <= NX)

Y index of LL corner (JBCOMP) No default ! JBCOMP = 1 !
(1 <= JBCOMP <= NY)

X index of UR corner (IECOMP) No default ! IECOMP = 263 !
(1 <= IECOMP <= NX)

Y index of UR corner (JECOMP) No default ! JECOMP = 206 !
(1 <= JECOMP <= NY)

SAMPLING Grid (GRIDDED RECEPTORS):

The lower left (LL) corner of the sampling grid is at grid point (IBSAMP, JBSAMP) of the MET. grid. The upper right (UR) corner of the sampling grid is at grid point (IESAMP, JESAMP) of the MET. grid. The sampling grid must be identical to or a subset of the computational grid. It may be a nested grid inside the computational grid. The grid spacing of the sampling grid is DGRIDKM/MESHDN.

Logical flag indicating if gridded receptors are used (LSAMP) Default: T ! LSAMP = F !
(T=yes, F=no)

X index of LL corner (IBSAMP) No default ! IBSAMP = 1 !
(IBCOMP <= IBSAMP <= IECOMP)

Y index of LL corner (JBSAMP) No default ! JBSAMP = 1 !
(JBCOMP <= JBSAMP <= JECOMP)

X index of UR corner (IESAMP) No default ! IESAMP = 263 !
(IBCOMP <= IESAMP <= IECOMP)

Y index of UR corner (JESAMP) No default ! JESAMP = 206 !
(JBCOMP <= JESAMP <= JECOMP)

Nesting factor of the sampling grid (MESHDN) Default: 1 ! MESHDN = 1 !
(MESHDN is an integer >= 1)

!END!

INPUT GROUP: 5 -- Output Options

FILE	DEFAULT VALUE *	VALUE THIS RUN *
Concentrations (ICON)	1	! ICON = 1 !
Dry Fluxes (IDRY)	1	! IDRY = 0 !
Wet Fluxes (IWET)	1	! IWET = 0 !
2D Temperature (IT2D)	0	! IT2D = 0 !
2D Density (IRHO)	0	! IRHO = 0 !
Relative Humidity (IVIS) (relative humidity file is required for visibility analysis)	1	! IVIS = 1 !

Use data compression option in output file?
(LCOMPRS) Default: T ! LCOMPRS = T !

*
0 = Do not create file, 1 = create file

QA PLOT FILE OUTPUT OPTION:

Create a standard series of output files (e.g. locations of sources, receptors, grids ...) suitable for plotting?

```
(IQAPLOT)                Default: 1      ! IQAPLOT =  1  !
 0 = no
 1 = yes

DIAGNOSTIC MASS FLUX OUTPUT OPTIONS:

Mass flux across specified boundaries
for selected species reported?
(IMFLX)                  Default: 0      ! IMFLX =  0  !
 0 = no
 1 = yes (FLUXBDY.DAT and MASSFLX.DAT filenames
      are specified in Input Group 0)

Mass balance for each species
reported?
(IMBAL)                  Default: 0      ! IMBAL =  0  !
 0 = no
 1 = yes (MASSBAL.DAT filename is
     specified in Input Group 0)


LINE PRINTER OUTPUT OPTIONS:

Print concentrations (ICPRT)  Default: 0      ! ICPRT =  0  !
Print dry fluxes (IDPRT)      Default: 0      ! IDPRT =  0  !
Print wet fluxes (IWPRT)      Default: 0      ! IWPRT =  0  !
(0 = Do not print, 1 = Print)

Concentration print interval
(ICFRQ) in timesteps          Default: 1      ! ICFRQ =  24 !
Dry flux print interval
(IDFRQ) in timesteps          Default: 1      ! IDFRQ =  1  !
Wet flux print interval
(IWFRQ) in timesteps          Default: 1      ! IWFRQ =  1  !

Units for Line Printer Output
(IPRTU)                  Default: 1      ! IPRTU =  3  !
          for        for
       Concentration  Deposition
  1 =     g/m**3       g/m**2/s
  2 =    mg/m**3      mg/m**2/s
  3 =    ug/m**3      ug/m**2/s
  4 =    ng/m**3      ng/m**2/s
  5 =   Odour Units

Messages tracking progress of run
written to the screen ?
(IMESG)                  Default: 2      ! IMESG =  2  !
 0 = no
 1 = yes (advection step, puff ID)
 2 = yes (YYYYJJJHH, # old puffs, # emitted puffs)


SPECIES (or GROUP for combined species) LIST FOR OUTPUT OPTIONS

          ---- CONCENTRATIONS ----  ------ DRY FLUXES ------  ------ WET FLUXES ------  -- MASS FLUX --
SPECIES
/GROUP      PRINTED?  SAVED ON DISK?  PRINTED?  SAVED ON DISK?  PRINTED?  SAVED ON DISK?  SAVED ON DISK?
-------     ---------- ------------- ---------- ------------- ---------- ------------- ---------------
!     SO2 =   0,        1,        0,        1,        0,        1,        0  !
!     SO4 =   0,        1,        0,        1,        0,        1,        0  !
!     NOX =   0,        1,        0,        1,        0,        1,        0  !
!    HNO3 =   0,        1,        0,        1,        0,        1,        0  !
!     NO3 =   0,        1,        0,        1,        0,        1,        0  !
!    PM10 =   0,        1,        0,        1,        0,        1,        0  !
!      CO =   0,        1,        0,        1,        0,        1,        0  !

OPTIONS FOR PRINTING "DEBUG" QUANTITIES (much output)

Logical for debug output
(LDEBUG)                 Default: F      ! LDEBUG = F !

First puff to track
(IPFDEB)                 Default: 1      ! IPFDEB =  1  !

Number of puffs to track
(NPFDEB)                 Default: 1      ! NPFDEB =  1  !

Met. period to start output
```

```
    (NN1)                          Default: 1     ! NN1 =  1   !

    Met. period to end output
    (NN2)                          Default: 10    ! NN2 =  10  !

!END!

-----------------------------------------------------------------------------


INPUT GROUP: 6a, 6b, & 6c -- Subgrid scale complex terrain inputs
-------------------------

---------------
Subgroup (6a)
---------------
    Number of terrain features (NHILL)      Default: 0     ! NHILL =  0   !

    Number of special complex terrain
    receptors  (NCTREC)                 Default: 0     ! NCTREC =  0   !

    Terrain and CTSG Receptor data for
    CTSG hills input in CTDM format ?
    (MHILL)                         No Default     ! MHILL =  2   !
    1 = Hill and Receptor data created
       by CTDM processors & read from
       HILL.DAT and HILLRCT.DAT files
    2 = Hill data created by OPTHILL &
       input below in Subgroup (6b);
       Receptor data in Subgroup (6c)

    Factor to convert horizontal dimensions  Default: 1.0   ! XHILL2M = 1. !
    to meters (MHILL=1)

    Factor to convert vertical dimensions    Default: 1.0   ! ZHILL2M = 1. !
    to meters (MHILL=1)

    X-origin of CTDM system relative to      No Default     ! XCTDMKM = 0.0E00 !
    CALPUFF coordinate system, in Kilometers (MHILL=1)

    Y-origin of CTDM system relative to      No Default     ! YCTDMKM = 0.0E00 !
    CALPUFF coordinate system, in Kilometers (MHILL=1)

! END !

---------------
Subgroup (6b)
---------------

              1 **
   HILL information


HILL        XC      YC      THETAH  ZGRID  RELIEF   EXPO 1   EXPO 2   SCALE 1   SCALE 2   AMAX1     AMAX2
 NO.       (km)    (km)    (deg.)  (m)    (m)      (m)      (m)      (m)       (m)       (m)
----       ----    ----    ------  -----  ------   ------   ------   -------   -------   -----     -----

---------------
Subgroup (6c)
---------------

   COMPLEX TERRAIN RECEPTOR INFORMATION

              XRCT       YRCT       ZRCT        XHH
              (km)       (km)       (m)
              ------     -----      ------      ----


-------------------
1
   Description of Complex Terrain Variables:
      XC, YC  = Coordinates of center of hill
      THETAH  = Orientation of major axis of hill (clockwise from
            North)
      ZGRID   = Height of the  0  of the grid above mean sea
            level
      RELIEF  = Height of the crest of the hill above the grid elevation
      EXPO 1  = Hill-shape exponent for the major axis
```

```
      EXPO 2  = Hill-shape exponent for the major axis
      SCALE 1 = Horizontal length scale along the major axis
      SCALE 2 = Horizontal length scale along the minor axis
      AMAX    = Maximum allowed axis length for the major axis
      BMAX    = Maximum allowed axis length for the major axis

      XRCT, YRCT = Coordinates of the complex terrain receptors
      ZRCT    = Height of the ground (MSL) at the complex terrain
              Receptor
      XHH     = Hill number associated with each complex terrain receptor
              (NOTE: MUST BE ENTERED AS A REAL NUMBER)

  **
   NOTE: DATA for each hill and CTSG receptor are treated as a separate
       input subgroup and therefore must end with an input group terminator.

-----------------------------------------------------------------------------


INPUT GROUP: 7 -- Chemical parameters for dry deposition of gases
--------------

    SPECIES    DIFFUSIVITY    ALPHA STAR    REACTIVITY   MESOPHYLL RESISTANCE    HENRY'S LAW COEFFICIENT
     NAME      (cm**2/s)                     (s/cm)          (dimensionless)
    -------   -----------   ----------   ----------   --------------------   -----------------------

!      SO2 =   0.1509,       1000,        8,           0,          0.04 !
!      NOX =   0.1656,          1,        8,           5,           3.5 !
!     HNO3 =    0.1628,        1,       18,           0,     0.00000008 !

!END!


-----------------------------------------------------------------------------


INPUT GROUP: 8 -- Size parameters for dry deposition of particles
--------------

   For SINGLE SPECIES, the mean and standard deviation are used to
   compute a deposition velocity for NINT (see group 9) size-ranges,
   and these are then averaged to obtain a mean deposition velocity.

   For GROUPED SPECIES, the size distribution should be explicitly
   specified (by the 'species' in the group), and the standard deviation
   for each should be entered as 0.  The model will then use the
   deposition velocity for the stated mean diameter.

    SPECIES    GEOMETRIC MASS MEAN      GEOMETRIC STANDARD
     NAME          DIAMETER                 DEVIATION
                 (microns)                (microns)
    -------    -------------------      ------------------
!      SO4 =      0.48,                    2.  !
!      NO3 =      0.48,                    2.  !
!    PM0063 =      0.63,                   0.  !
!    PM0100 =      1.00,                   0.  !
!    PM0125 =      1.25,                   0.  !
!    PM0250 =      2.50,                   0.  !
!    PM0600 =      6.00,                   0.  !
!    PM1000 =     10.00,                   0.  !

!END!


-----------------------------------------------------------------------------


INPUT GROUP: 9 -- Miscellaneous dry deposition parameters
--------------

   Reference cuticle resistance (s/cm)
   (RCUTR)                    Default: 30   !  RCUTR = 30.0 !
   Reference ground resistance  (s/cm)
   (RGR)                      Default: 10   !   RGR = 10.0 !
   Reference pollutant reactivity
   (REACTR)                   Default: 8    ! REACTR = 8.0 !

   Number of particle-size intervals used to
   evaluate effective particle deposition velocity
```

```
   (NINT)                    Default: 9    !  NINT =  9  !

   Vegetation state in unirrigated areas
   (IVEG)                    Default: 1    !  IVEG =  1  !
     IVEG=1 for active and unstressed vegetation
     IVEG=2 for active and stressed vegetation
     IVEG=3 for inactive vegetation

!END!

------------------------------------------------------------------------------


INPUT GROUP: 10 -- Wet Deposition Parameters
---------------


                 Scavenging Coefficient -- Units: (sec)**(-1)

     Pollutant     Liquid Precip.      Frozen Precip.
     ---------     --------------      --------------
!       SO2 =       3.0E-05,            0.0E00 !
!       SO4 =       1.0E-04,            3.0E-05 !
!      HNO3 =       6.0E-05,            0.0E00 !
!       NO3 =       1.0E-04,            3.0E-05 !
!    PM0063 =       1.0E-04,            3.0E-05 !
!    PM0100 =       1.0E-04,            3.0E-05 !
!    PM0125 =       1.0E-04,            3.0E-05 !
!    PM0250 =       1.0E-04,            3.0E-05 !
!    PM0600 =       1.0E-04,            3.0E-05 !
!    PM1000 =       1.0E-04,            3.0E-05 !

!END!

------------------------------------------------------------------------------


INPUT GROUP: 11 -- Chemistry Parameters
---------------

   Ozone data input option (MOZ)    Default: 1          ! MOZ =  1  !
   (Used only if MCHEM = 1, 3, or 4)
     0 = use a monthly background ozone value
     1 = read hourly ozone concentrations from
        the OZONE.DAT data file

   Monthly ozone concentrations
   (Used only if MCHEM = 1, 3, or 4 and
    MOZ = 0 or MOZ = 1 and all hourly O3 data missing)
   (BCKO3) in ppb                Default: 12*80.
   !  BCKO3 = 12*50. !

   Monthly ammonia concentrations
   (Used only if MCHEM = 1, or 3)
   (BCKNH3) in ppb               Default: 12*10.
   !  BCKNH3 = 12*0.5 !

   Nighttime SO2 loss rate (RNITE1)
   in percent/hour               Default: 0.2        ! RNITE1 = .2 !

   Nighttime NOx loss rate (RNITE2)
   in percent/hour               Default: 2.0        ! RNITE2 = 2.0 !

   Nighttime HNO3 formation rate (RNITE3)
   in percent/hour               Default: 2.0        ! RNITE3 = 2.0 !

   H2O2 data input option (MH2O2)   Default: 1          ! MH2O2 =  1  !
   (Used only if MAQCHEM = 1)
     0 = use a monthly background H2O2 value
     1 = read hourly H2O2 concentrations from
        the H2O2.DAT data file

   Monthly H2O2 concentrations
   (Used only if MQACHEM = 1 and
    MH2O2 = 0 or MH2O2 = 1 and all hourly H2O2 data missing)
   (BCKH2O2) in ppb              Default: 12*1.
   !  BCKH2O2 = 12*1 !
```

```
--- Data for SECONDARY ORGANIC AEROSOL (SOA) Option
    (used only if MCHEM = 4)

    The SOA module uses monthly values of:
        Fine particulate concentration in ug/m^3 (BCKPMF)
        Organic fraction of fine particulate     (OFRAC)
        VOC / NOX ratio (after reaction)         (VCNX)
    to characterize the air mass when computing
    the formation of SOA from VOC emissions.
    Typical values for several distinct air mass types are:

      Month   1   2   3   4   5   6   7   8   9  10  11  12
            Jan Feb Mar Apr May Jun Jul Aug Sep Oct Nov Dec

    Clean Continental
      BCKPMF  1.  1.  1.  1.  1.  1.  1.  1.  1.  1.  1.  1.
      OFRAC .15 .15 .20 .20 .20 .20 .20 .20 .20 .20 .20 .15
      VCNX   50. 50. 50. 50. 50. 50. 50. 50. 50. 50. 50. 50.

    Clean Marine (surface)
      BCKPMF .5  .5  .5  .5  .5  .5  .5  .5  .5  .5  .5  .5
      OFRAC .25 .25 .30 .30 .30 .30 .30 .30 .30 .30 .30 .25
      VCNX   50. 50. 50. 50. 50. 50. 50. 50. 50. 50. 50. 50.

    Urban - low biogenic (controls present)
      BCKPMF 30. 30. 30. 30. 30. 30. 30. 30. 30. 30. 30. 30.
      OFRAC .20 .20 .25 .25 .25 .25 .25 .25 .20 .20 .20 .20
      VCNX    4.  4.  4.  4.  4.  4.  4.  4.  4.  4.  4.  4.

    Urban - high biogenic (controls present)
      BCKPMF 60. 60. 60. 60. 60. 60. 60. 60. 60. 60. 60. 60.
      OFRAC .25 .25 .30 .30 .30 .55 .55 .55 .35 .35 .35 .25
      VCNX   15. 15. 15. 15. 15. 15. 15. 15. 15. 15. 15. 15.

    Regional Plume
      BCKPMF 20. 20. 20. 20. 20. 20. 20. 20. 20. 20. 20. 20.
      OFRAC .20 .20 .25 .35 .25 .40 .40 .40 .30 .30 .30 .20
      VCNX   15. 15. 15. 15. 15. 15. 15. 15. 15. 15. 15. 15.

    Urban - no controls present
      BCKPMF 100. 100. 100. 100. 100. 100. 100. 100. 100. 100. 100. 100.
      OFRAC .30 .30 .35 .35 .35 .55 .55 .55 .35 .35 .35 .30
      VCNX    2.  2.  2.  2.  2.  2.  2.  2.  2.  2.  2.  2.

    Default: Clean Continental
    ! BCKPMF = 1.00, 1.00, 1.00, 1.00, 1.00, 1.00, 1.00, 1.00, 1.00, 1.00, 1.00, 1.00 !
    ! OFRAC  = 0.15, 0.15, 0.20, 0.20, 0.20, 0.20, 0.20, 0.20, 0.20, 0.20, 0.20, 0.15 !
    ! VCNX   = 50.00, 50.00, 50.00, 50.00, 50.00, 50.00, 50.00, 50.00, 50.00, 50.00, 50.00, 50.00 !

!END!

-----------------------------------------------------------------------------------------

INPUT GROUP: 12 -- Misc. Dispersion and Computational Parameters
----------------

    Horizontal size of puff (m) beyond which
    time-dependent dispersion equations (Heffter)
    are used to determine sigma-y and
    sigma-z (SYTDEP)                    Default: 550.   ! SYTDEP = 5.5E02 !

    Switch for using Heffter equation for sigma z
    as above (0 = Not use Heffter; 1 = use Heffter
    (MHFTSZ)                            Default: 0      ! MHFTSZ =  0   !

    Stability class used to determine plume
    growth rates for puffs above the boundary
    layer (JSUP)                        Default: 5      ! JSUP =  5   !

    Vertical dispersion constant for stable
    conditions (k1 in Eqn. 2.7-3)  (CONK1)     Default: 0.01   ! CONK1 = .01 !

    Vertical dispersion constant for neutral/
    unstable conditions (k2 in Eqn. 2.7-4)
```

```
(CONK2)                          Default: 0.1    ! CONK2 = .1 !

Factor for determining Transition-point from
Schulman-Scire to Huber-Snyder Building Downwash
scheme (SS used for Hs < Hb + TBD * HL)
(TBD)                            Default: 0.5    ! TBD = .5 !
  TBD < 0   ==> always use Huber-Snyder
  TBD = 1.5 ==> always use Schulman-Scire
  TBD = 0.5 ==> ISC Transition-point

Range of land use categories for which
urban dispersion is assumed
(IURB1, IURB2)                    Default: 10     ! IURB1 =  10  !
                                 19     ! IURB2 =  19  !

Site characterization parameters for single-point Met data files ---------
(needed for METFM = 2,3,4,5)

  Land use category for modeling domain
  (ILANDUIN)                      Default: 20     ! ILANDUIN =  20  !

  Roughness length (m) for modeling domain
  (Z0IN)                          Default: 0.25   ! Z0IN = .25 !

  Leaf area index for modeling domain
  (XLAIIN)                        Default: 3.0    ! XLAIIN = 3.0 !

  Elevation above sea level (m)
  (ELEVIN)                        Default: 0.0    ! ELEVIN = .0 !

  Latitude (degrees) for met location
  (XLATIN)                        Default: -999.  ! XLATIN = -999.0 !

  Longitude (degrees) for met location
  (XLONIN)                        Default: -999.  ! XLONIN = -999.0 !

Specialized information for interpreting single-point Met data files -----

  Anemometer height (m) (Used only if METFM = 2,3)
  (ANEMHT)                        Default: 10.    ! ANEMHT = 10.0 !

  Form of lateral turbulance data in PROFILE.DAT file
  (Used only if METFM = 4,5 or MTURBVW = 1 or 3)
  (ISIGMAV)                       Default: 1      ! ISIGMAV =  1  !
    0 = read sigma-theta
    1 = read sigma-v

  Choice of mixing heights (Used only if METFM = 4)
  (IMIXCTDM)                      Default: 0      ! IMIXCTDM =  0  !
    0 = read PREDICTED mixing heights
    1 = read OBSERVED mixing heights

Maximum length of a slug (met. grid units)
(XMXLEN)                          Default: 1.0    ! XMXLEN = 1.0 !

Maximum travel distance of a puff/slug (in
grid units) during one sampling step
(XSAMLEN)                         Default: 1.0    ! XSAMLEN = 1.0 !

Maximum Number of slugs/puffs release from
one source during one time step
(MXNEW)                           Default: 99     ! MXNEW =  99   !

Maximum Number of sampling steps for
one puff/slug during one time step
(MXSAM)                           Default: 99     ! MXSAM =  99   !

Number of iterations used when computing
the transport wind for a sampling step
that includes gradual rise (for CALMET
and PROFILE winds)
(NCOUNT)                          Default: 2      ! NCOUNT =  2   !

Minimum sigma y for a new puff/slug (m)
(SYMIN)                           Default: 1.0    ! SYMIN = 1.0  !

Minimum sigma z for a new puff/slug (m)
(SZMIN)                           Default: 1.0    ! SZMIN = 1.0  !
```

```
Default minimum turbulence velocities sigma-v and sigma-w
for each stability class over land and over water (m/s)
(SVMIN(12) and SWMIN(12))

          ---------- LAND ----------      --------- WATER ---------
  Stab Class :  A   B   C   D   E   F       A   B   C   D   E   F
          --- --- --- --- --- ---      --- --- --- --- --- ---
Default SVMIN : .50, .50, .50, .50, .50, .50,     .37, .37, .37, .37, .37, .37
Default SWMIN : .20, .12, .08, .06, .03, .016,    .20, .12, .08, .06, .03, .016

    * SVMIN = 0.500, 0.500, 0.500, 0.500, 0.500, 0.500, 0.370, 0.370, 0.370, 0.370, 0.370, 0.370*
    ! SVMIN = 0.500, 0.500, 0.500, 0.500, 0.500, 0.500, 0.500, 0.500, 0.500, 0.500, 0.500, 0.500!
    ! SWMIN = 0.200, 0.120, 0.080, 0.060, 0.030, 0.016, 0.200, 0.120, 0.080, 0.060, 0.030, 0.016!

Divergence criterion for dw/dz across puff
used to initiate adjustment for horizontal
convergence (1/s)
Partial adjustment starts at CDIV(1), and
full adjustment is reached at CDIV(2)
(CDIV(2))                    Default: 0.0,0.0  ! CDIV = .0, .0 !

Minimum wind speed (m/s) allowed for
non-calm conditions. Also used as minimum
speed returned when using power-law
extrapolation toward surface
(WSCALM)                     Default: 0.5    ! WSCALM = .5 !

Maximum mixing height (m)
(XMAXZI)                     Default: 3000.  ! XMAXZI = 3000.0 !

Minimum mixing height (m)
(XMINZI)                     Default: 50.    ! XMINZI = 50.0 !

Default wind speed classes --
5 upper bounds (m/s) are entered;
the 6th class has no upper limit
(WSCAT(5))                Default   :
                     ISC RURAL : 1.54, 3.09, 5.14, 8.23, 10.8 (10.8+)

                Wind Speed Class :  1    2    3    4    5
                                   ---  ---  ---  ---  ---
                          ! WSCAT = 1.54, 3.09, 5.14, 8.23, 10.80 !

Default wind speed profile power-law
exponents for stabilities 1-6
(PLX0(6))                 Default   : ISC RURAL values
                     ISC RURAL : .07, .07, .10, .15, .35, .55
                     ISC URBAN : .15, .15, .20, .25, .30, .30

                Stability Class :  A    B    C    D    E    F
                                  ---  ---  ---  ---  ---  ---
                          ! PLX0 = 0.07, 0.07, 0.10, 0.15, 0.35, 0.55 !

Default potential temperature gradient
for stable classes E, F (degK/m)
(PTG0(2))                 Default: 0.020, 0.035
                          ! PTG0 = 0.020,   0.035 !

Default plume path coefficients for
each stability class (used when option
for partial plume height terrain adjustment
is selected -- MCTADJ=3)
(PPC(6))             Stability Class :  A    B    C    D    E    F
                   Default  PPC : .50,  .50,  .50,  .50,  .35,  .35
                                  ---  ---  ---  ---  ---  ---
                          !  PPC = 0.50, 0.50, 0.50, 0.50, 0.35, 0.35 !

Slug-to-puff transition criterion factor
equal to sigma-y/length of slug
(SL2PF)                   Default: 10.      ! SL2PF = 10.0 !

Puff-splitting control variables -----------------------

 VERTICAL SPLIT
 --------------

 Number of puffs that result every time a puff
 is split - nsplit=2 means that 1 puff splits
 into 2
```

```
(NSPLIT)                    Default:  3      ! NSPLIT =  3  !

Time(s) of a day when split puffs are eligible to
be split once again; this is typically set once
per day, around sunset before nocturnal shear develops.
24 values: 0 is midnight (00:00) and 23 is 11 PM (23:00)
0=do not re-split    1=eligible for re-split
(IRESPLIT(24))              Default:  Hour 17 = 1
!  IRESPLIT = 0,0,0,0,0,0,0,0,0,0,0,0,0,0,0,1,0,0,0,0,0,0 !

Split is allowed only if last hour's mixing
height (m) exceeds a minimum value
(ZISPLIT)                   Default: 100.     ! ZISPLIT = 100.0 !

Split is allowed only if ratio of last hour's
mixing ht to the maximum mixing ht experienced
by the puff is less than a maximum value (this
postpones a split until a nocturnal layer develops)
(ROLDMAX)                   Default: 0.25     ! ROLDMAX = 0.25 !


HORIZONTAL SPLIT
----------------

Number of puffs that result every time a puff
is split - nsplith=5 means that 1 puff splits
into 5
(NSPLITH)                   Default:  5      ! NSPLITH =  5  !

Minimum sigma-y (Grid Cells Units) of puff
before it may be split
(SYSPLITH)                  Default:  1.0     ! SYSPLITH = 1.0 !

Minimum puff elongation rate (SYSPLITH/hr) due to
wind shear, before it may be split
(SHSPLITH)                  Default:  2.      ! SHSPLITH = 2.0 !

Minimum concentration (g/m^3) of each
species in puff before it may be split
Enter array of NSPEC values; if a single value is
entered, it will be used for ALL species
(CNSPLITH)                  Default:  1.0E-07   ! CNSPLITH = 1.0E-07 !

Integration control variables ------------------------

Fractional convergence criterion for numerical SLUG
sampling integration
(EPSSLUG)                   Default:  1.0e-04  ! EPSSLUG = 1.0E-04 !

Fractional convergence criterion for numerical AREA
source integration
(EPSAREA)                   Default:  1.0e-06  ! EPSAREA = 1.0E-06 !

Trajectory step-length (m) used for numerical rise
integration
(DSRISE)                    Default:  1.0     ! DSRISE = 1.0 !

Boundary Condition (BC) Puff control variables ------------------------

Minimum height (m) to which BC puffs are mixed as they are emitted
(MBCON=2 ONLY).  Actual height is reset to the current mixing height
at the release point if greater than this minimum.
(HTMINBC)                   Default:  500.    ! HTMINBC = 500.0 !

Search radius (km) about a receptor for sampling nearest BC puff.
BC puffs are typically emitted with a spacing of one grid cell
length, so the search radius should be greater than DGRIDKM.
(RSAMPBC)                   Default:  10.     ! RSAMPBC = 10.0 !

Near-Surface depletion adjustment to concentration profile used when
sampling BC puffs?
(MDEPBC)                    Default:  1      ! MDEPBC =  1  !
  0 = Concentration is NOT adjusted for depletion
  1 = Adjust Concentration for depletion

!END!

------------------------------------------------------------------------------
```

INPUT GROUPS: 13a, 13b, 13c, 13d -- Point source parameters

Subgroup (13a)

Number of point sources with
parameters provided below (NPT1) No default ! NPT1 = 4 !

Units used for point source
emissions below (IPTU) Default: 1 ! IPTU = 3 !
1 = g/s
2 = kg/hr
3 = lb/hr
4 = tons/yr
5 = Odour Unit * m**3/s (vol. flux of odour compound)
6 = Odour Unit * m**3/min
7 = metric tons/yr

Number of source-species
combinations with variable
emissions scaling factors
provided below in (13d) (NSPT1) Default: 0 ! NSPT1 = 0 !

Number of point sources with
variable emission parameters
provided in external file (NPT2) No default ! NPT2 = 0 !

(If NPT2 > 0, these point
source emissions are read from
the file: PTEMARB.DAT)

!END!

Subgroup (13b)

POINT SOURCE: CONSTANT DATA[a]

Source No.	X Coordinate (km)	Y Coordinate (km)	Stack Height (m)	Base Elevation (m)	Stack Diameter (m)	Exit Vel. (m/s)	Exit Temp. (deg. K)	Bldg. Dwash	Emission Rates
------	----------	----------	------	------	--------	-----	--------	-----	--------

[b] [c]

********** EMISSION RATES ARE IN LB/HR **********
2 CTS ON NATURAL GAS
CTADB, CTBDB - MAXIMUM ER FOR BASE LOAD, 20F, WITH DUCT BURNING
SO2 ER: 5.7 LB/HR
SO4 ER: 1.21 LB/HR
NOX ER: 23.3 LB/HR
PM ER: 12.6 LB/HR
CO ER: 16.2 LB/HR

FGH - FUEL GAS HEATER - BASED ON LB/HR EMISSIONS
COOLTOW- COOLING TOWER PM10 - BASED ON LB/HR EMISSIONS FOR 0.001% DRIFT RATE
SO2, SO4, NOX, HNO3, NO3

```
3 ! SRCNAM = CTADB     !
3 ! X = 1465.206, -841.485, 42.7, 3.00, 5.95, 20.70, 362.2, 1.0, 5.7, 1.21, 23.3, 0.0, 0.0,
  0.0, 0.0, 0.0, 0.0, 0.0, 12.6, 16.2 !
!END!
4 ! SRCNAM = CTBDB     !
4 ! X = 1465.234, -841.520, 42.7, 3.00, 5.95, 20.70, 362.2, 1.0, 5.7, 1.21, 23.3, 0.0, 0.0,
  0.0, 0.0, 0.0, 0.0, 0.0, 12.6, 16.2 !
!END!
5 ! SRCNAM = FGH       !
5 ! X = 1465.052, -841.469, 12.2, 3.00, 0.46,  6.40, 651.5, 1.0, .056,  0.0, 2.36, 0.0, 0.0,
  0.0, 0.0, 0.0, 0.0, 0.0, 0.07, 1.79 !
!END!

1 ! SRCNAM = COOLTOW    !
1 ! X = 1465.241, -841.459, 13.72, 3.00, 8.53, 11.96, 315.9, 1.0, 0.0, 0.0, 0.0, 0.0, 0.0,
  0.0, 0.0, 0.0, 0.0, 0.0, 0.84, 0.0 !
!END!
```

---

a
Data for each source are treated as a separate input subgroup
and therefore must end with an input group terminator.

SRCNAM is a 12-character name for a source
(No default)
X is an array holding the source data listed by the column headings
(No default)
SIGYZI is an array holding the initial sigma-y and sigma-z (m)
(Default: 0.,0.)
FMFAC is a vertical momentum flux factor (0. or 1.0) used to represent
the effect of rain-caps or other physical configurations that
reduce momentum rise associated with the actual exit velocity.
(Default: 1.0 -- full momentum used)
ZPLTFM is the platform height (m) for sources influenced by an isolated
structure that has a significant open area between the surface
and the bulk of the structure, such as an offshore oil platform.
The Base Elevation is

b
0. = No building downwash modeled, 1. = downwash modeled
1. = Downwash modeled for buildings resting on the surface
2. = Downwash modeled for buildings raised above the surface (ZPLTFM > 0.)
NOTE: must be entered as a REAL number (i.e., with decimal point)

c
An emission rate must be entered for every pollutant modeled.
Enter emission rate of zero for secondary pollutants that are
modeled, but not emitted. Units are specified by IPTU
(e.g. 1 for g/s).

Subgroup (13c)

BUILDING DIMENSION DATA FOR SOURCES SUBJECT TO DOWNWASH

Source a
No. Effective building height, width, length and X/Y offset (in meters)
every 10 degrees. LENGTH, XBADJ, and YBADJ are only needed for
MBDW=2 (PRIME downwash option)
--- ---

Subgroup (13c)

```
  3 ! SRCNAM = CTADB     !
  3 ! HEIGHT = 27.74, 27.74, 27.74, 27.74, 27.74, 27.74,
        27.74, 27.74, 27.74, 27.74, 27.74, 27.74,
        27.74, 27.74, 27.74, 27.74, 27.74, 27.74,
        27.74, 27.74, 27.74, 27.74, 27.74, 27.74,
        27.74, 27.74, 27.74, 27.74, 27.74, 27.74,
        27.74, 27.74, 27.74, 27.74, 27.74, 27.74 !
  3 ! WIDTH =  33.05, 31.43, 28.86, 25.41, 21.19, 16.33,
        19.64, 24.13, 27.89, 30.80, 32.78, 33.76,
        33.71, 32.64, 30.58, 31.83, 33.25, 33.66,
        33.05, 31.43, 28.86, 25.41, 21.19, 16.33,
        19.64, 24.13, 27.89, 30.80, 32.78, 33.76,
        33.71, 32.64, 30.58, 31.83, 33.25, 33.66 !
  3 ! LENGTH = 30.80, 32.78, 33.76, 33.71, 32.64, 30.58,
        31.83, 33.25, 33.66, 33.05, 31.43, 28.86,
        25.41, 21.19, 16.33, 19.64, 24.13, 27.89,
        30.80, 32.78, 33.76, 33.71, 32.64, 30.58,
        31.83, 33.25, 33.66, 33.05, 31.43, 28.86,
        25.41, 21.19, 16.33, 19.64, 24.13, 27.89 !
  3 ! XBADJ =  62.64, -60.53, -32.51, -33.94, -34.34, -33.69,
        34.20, -34.17, -33.10, -31.02, -28.00, -24.13,
        19.53, -14.33, -8.70, -7.23, -6.35, -5.28,
        31.84, 27.75, -1.25, 0.22, 1.69, 3.11,
         2.37, 0.92, -0.56, -2.03, -3.43, -4.73,
        -5.88, -6.86, -7.63, -12.41, -17.78, -22.62 !
  3 ! YBADJ =  13.74, -21.75, 9.70, 6.82, 3.73, 0.53,
        -2.59, -5.72, -8.67, -11.36, -13.70, -15.63,
        17.08, -18.01, -18.40, -18.29, -17.55, -16.27,
        13.74, 21.75, -9.70, -6.82, -3.73, -0.53,
         2.59, 5.72, 8.67, 11.36, 13.70, 15.63,
        17.08, 18.01, 18.40, 18.29, 17.55, 16.27 !

!END!
```

```
    4 ! SRCNAM = CTBDB     !
    4 ! HEIGHT = 27.74, 27.74, 27.74, 27.74, 27.74, 27.74,
          27.74, 27.74, 27.74, 27.74, 27.74, 27.74,
          27.74, 27.74, 27.74, 27.74, 27.74, 27.74,
          27.74, 27.74, 27.74, 27.74, 27.74, 27.74,
          27.74, 27.74, 27.74, 27.74, 27.74, 27.74,
          27.74, 27.74, 27.74, 27.74, 27.74, 27.74 !
    4 ! WIDTH =  33.05, 31.43, 28.86, 25.41, 21.19, 16.33,
          19.64, 24.13, 27.89, 30.80, 32.78, 33.76,
          33.71, 32.64, 30.58, 31.83, 33.25, 33.66,
          33.05, 31.43, 28.86, 25.41, 21.19, 16.33,
          19.64, 24.13, 27.89, 30.80, 32.78, 33.76,
          33.71, 32.64, 30.58, 31.83, 33.25, 33.66 !
    4 ! LENGTH = 30.80, 32.78, 33.76, 33.71, 32.64, 30.58,
          31.83, 33.25, 33.66, 33.05, 31.43, 28.86,
          25.41, 21.19, 16.33, 19.64, 24.13, 27.89,
          30.80, 32.78, 33.76, 33.71, 32.64, 30.58,
          31.83, 33.25, 33.66, 33.05, 31.43, 28.86,
          25.41, 21.19, 16.33, 19.64, 24.13, 27.89 !
    4 ! XBADJ =  -62.64, -60.53, -32.51, -33.94, -34.34, -33.69,
         -34.20, -34.17, -33.10, -31.02, -28.00, -24.13,
         -19.53, -14.33,  -8.70,  -7.23,  -6.35,  -5.28,
          31.84, 27.75, -1.25,  0.22,  1.69,  3.11,
           2.37,  0.92, -0.56, -2.03, -3.43, -4.73,
          -5.88, -6.86, -7.63, -12.41, -17.78, -22.62 !
    4 ! YBADJ =  -13.74, -21.75,  9.70,  6.82,  3.73,  0.53,
          -2.59, -5.72, -8.67, -11.36, -13.70, -15.63,
         -17.08, -18.01, -18.40, -18.29, -17.55, -16.27,
          13.74, 21.75, -9.70, -6.82, -3.73, -0.53,
           2.59,  5.72,  8.67, 11.36, 13.70, 15.63,
          17.08, 18.01, 18.40, 18.29, 17.55, 16.27 !

!END!
    5 ! SRCNAM = FGH       !
    5 ! HEIGHT =  0.00,  0.00,  0.00,  0.00,  0.00,  0.00,
          0.00,  0.00,  0.00,  0.00,  0.00,  0.00,
          0.00,  0.00,  0.00,  0.00,  0.00,  0.00,
          0.00,  0.00,  0.00,  0.00,  0.00,  0.00,
          0.00,  0.00,  0.00, 27.74, 27.74, 27.74,
          0.00,  0.00,  0.00,  0.00,  0.00,  0.00 !
    5 ! WIDTH =  0.00,  0.00,  0.00,  0.00,  0.00,  0.00,
          0.00,  0.00,  0.00,  0.00,  0.00,  0.00,
          0.00,  0.00,  0.00,  0.00,  0.00,  0.00,
          0.00,  0.00,  0.00,  0.00,  0.00,  0.00,
          0.00,  0.00,  0.00, 30.80, 32.78, 33.76,
          0.00,  0.00,  0.00,  0.00,  0.00,  0.00 !
    5 ! LENGTH =  0.00,  0.00,  0.00,  0.00,  0.00,  0.00,
          0.00,  0.00,  0.00,  0.00,  0.00,  0.00,
          0.00,  0.00,  0.00,  0.00,  0.00,  0.00,
          0.00,  0.00,  0.00,  0.00,  0.00,  0.00,
          0.00,  0.00,  0.00, 33.05, 31.43, 28.86,
          0.00,  0.00,  0.00,  0.00,  0.00,  0.00 !
    5 ! XBADJ =  0.00,  0.00,  0.00,  0.00,  0.00,  0.00,
          0.00,  0.00,  0.00,  0.00,  0.00,  0.00,
          0.00,  0.00,  0.00,  0.00,  0.00,  0.00,
          0.00,  0.00,  0.00,  0.00,  0.00,  0.00,
          0.00,  0.00,  0.00,-155.91,-157.43,-154.16,
          0.00,  0.00,  0.00,  0.00,  0.00,  0.00 !
    5 ! YBADJ =  0.00,  0.00,  0.00,  0.00,  0.00,  0.00,
          0.00,  0.00,  0.00,  0.00,  0.00,  0.00,
          0.00,  0.00,  0.00,  0.00,  0.00,  0.00,
          0.00,  0.00,  0.00,  0.00,  0.00,  0.00,
          0.00,  0.00,  0.00, 25.45,  0.86, -23.76,
          0.00,  0.00,  0.00,  0.00,  0.00,  0.00 !

!END!
    1 ! SRCNAM = COOLTOW    !
    1 ! HEIGHT = 27.74, 27.74, 27.74, 27.74, 27.74, 27.74,
          27.74, 27.74, 27.74, 10.67, 10.67, 10.67,
          10.67, 10.67, 10.67, 10.67, 10.67, 10.67,
          10.67, 10.67, 10.67, 27.74, 10.67, 10.67,
          10.67, 27.74, 27.74, 10.67, 10.67, 10.67,
          10.67, 10.67, 10.67, 10.67, 10.67, 10.67 !
    1 ! WIDTH =  33.05, 31.43, 28.86, 25.41, 21.19, 16.33,
          19.64, 24.13, 27.89, 124.20, 108.64, 89.77,
          68.17, 44.51, 19.49, 35.05, 59.32, 81.80,
         101.79, 118.68, 131.97, 25.41, 146.24, 146.79,
         146.95, 24.13, 27.89, 124.20, 108.64, 89.77,
          68.17, 44.51, 19.49, 35.05, 59.32, 81.80 !
```

```
  1 ! LENGTH = 30.80, 32.78, 33.76, 33.71, 32.64, 30.58,
        31.83, 33.25, 33.66, 101.79, 118.68, 131.97,
        141.25, 146.24, 146.79, 146.95, 143.66, 136.00,
        124.20, 108.64, 89.77, 33.71, 44.51, 19.49,
        35.05, 33.25, 33.66, 101.79, 118.68, 131.97,
        141.25, 146.24, 146.79, 146.95, 143.66, 136.00 !
  1 ! XBADJ = -87.13, -90.72, -91.55, -89.60, -75.58, -76.23,
        -76.74, -75.42, -71.80, -46.47, -54.00, -59.89,
        -63.95, -66.08, -66.20, -66.28, -64.91, -61.57,
        -56.37, -49.45, -41.02, 38.93, -20.73, -9.48,
        -18.51, 42.17, 38.14, -55.32, -64.69, -72.09,
        -77.30, -80.16, -80.59, -80.68, -78.75, -74.42 !
  1 ! YBADJ = 21.25, 8.45, -4.61, -17.52, 14.79, 4.26,
        -6.31, -16.77, -26.72, -5.74, -4.87, -3.86,
        -2.73, -1.52, -0.26, 0.99, 2.21, 3.37,
        4.42, 5.34, 6.10, -24.87, 7.04, 7.20,
        7.20, 16.77, 26.72, 5.74, 4.87, 3.86,
        2.73, 1.52, 0.26, -0.99, -2.21, -3.37 !

!END!
```

a
Building height, width, length, and X/Y offset from the source are treated as a separate input subgroup for each source and therefore must end with an input group terminator. The X/Y offset is the position, relative to the stack, of the center of the upwind face of the projected building, with the x-axis pointing along the flow direction.

Subgroup (13d)
---

a
POINT SOURCE: VARIABLE EMISSIONS DATA

Use this subgroup to describe temporal variations in the emission rates given in 13b. Factors entered multiply the rates in 13b. Skip sources here that have constant emissions. For more elaborate variation in source parameters, use PTEMARB.DAT and NPT2 > 0.

IVARY determines the type of variation, and is source-specific:
(IVARY) Default: 0

- 0 = Constant
- 1 = Diurnal cycle (24 scaling factors: hours 1-24)
- 2 = Monthly cycle (12 scaling factors: months 1-12)
- 3 = Hour & Season (4 groups of 24 hourly scaling factors, where first group is DEC-JAN-FEB)
- 4 = Speed & Stab. (6 groups of 6 scaling factors, where first group is Stability Class A, and the speed classes have upper bounds (m/s) defined in Group 12
- 5 = Temperature (12 scaling factors, where temperature classes have upper bounds (C) of: 0, 5, 10, 15, 20, 25, 30, 35, 40, 45, 50, 50+)

---
a
Data for each species are treated as a separate input subgroup and therefore must end with an input group terminator.

INPUT GROUPS: 14a, 14b, 14c, 14d -- Area source parameters

Subgroup (14a)

Number of polygon area sources with parameters specified below (NAR1) No default ! NAR1 = 0 !

Units used for area source emissions below (IARU) Default: 1 ! IARU = 1 !

```
        1 =     g/m**2/s
        2 =    kg/m**2/hr
        3 =    lb/m**2/hr
        4 =   tons/m**2/yr
        5 =   Odour Unit * m/s  (vol. flux/m**2 of odour compound)
        6 =   Odour Unit * m/min
        7 =   metric tons/m**2/yr

    Number of source-species
    combinations with variable
    emissions scaling factors
    provided below in (14d)      (NSAR1) Default: 0  !  NSAR1 =  0  !

    Number of buoyant polygon area sources
    with variable location and emission
    parameters (NAR2)                No default  !  NAR2 =  0   !
    (If NAR2 > 0, ALL parameter data for
    these sources are read from the file: BAEMARB.DAT)

!END!

---------------
Subgroup (14b)
---------------
                              a
        AREA SOURCE: CONSTANT DATA
        ---------------------------
                                          b
Source        Effect.   Base     Initial   Emission
 No.          Height  Elevation  Sigma z    Rates
              (m)      (m)       (m)
-------       ------   ------   --------  ---------


--------
   a
    Data for each source are treated as a separate input subgroup
    and therefore must end with an input group terminator.
   b
    An emission rate must be entered for every pollutant modeled.
    Enter emission rate of zero for secondary pollutants that are
    modeled, but not emitted.  Units are specified by IARU
    (e.g. 1 for g/m**2/s).

---------------
Subgroup (14c)
---------------

        COORDINATES (UTM-km) FOR EACH VERTEX(4) OF EACH POLYGON
        -------------------------------------------------------
Source                                                  a
 No.      Ordered list of X followed by list of Y, grouped by source
------    ---------------------------------------------------------


--------
   a
    Data for each source are treated as a separate input subgroup
    and therefore must end with an input group terminator.


---------------
Subgroup (14d)
---------------
                              a
        AREA SOURCE: VARIABLE EMISSIONS DATA
        ------------------------------------

    Use this subgroup to describe temporal variations in the emission
    rates given in 14b.  Factors entered multiply the rates in 14b.
    Skip sources here that have constant emissions.  For more elaborate
    variation in source parameters, use BAEMARB.DAT and NAR2 > 0.

    IVARY determines the type of variation, and is source-specific:
    (IVARY)                    Default: 0
        0 =     Constant
        1 =     Diurnal cycle (24 scaling factors: hours 1-24)
        2 =     Monthly cycle (12 scaling factors: months 1-12)
        3 =     Hour & Season (4 groups of 24 hourly scaling factors,
```

where first group is DEC-JAN-FEB)
4 = Speed & Stab. (6 groups of 6 scaling factors, where first group is Stability Class A, and the speed classes have upper bounds (m/s) defined in Group 12
5 = Temperature (12 scaling factors, where temperature classes have upper bounds (C) of: 0, 5, 10, 15, 20, 25, 30, 35, 40, 45, 50, 50+)

---
a
Data for each species are treated as a separate input subgroup and therefore must end with an input group terminator.

INPUT GROUPS: 15a, 15b, 15c -- Line source parameters

Subgroup (15a)

Number of buoyant line sources with variable location and emission parameters (NLN2) No default ! NLN2 = 0 !

(If NLN2 > 0, ALL parameter data for these sources are read from the file: LNEMARB.DAT)

Number of buoyant line sources (NLINES) No default ! NLINES = 0 !

Units used for line source emissions below (ILNU) Default: 1 ! ILNU = 1 !
1 = g/s
2 = kg/hr
3 = lb/hr
4 = tons/yr
5 = Odour Unit * m**3/s (vol. flux of odour compound)
6 = Odour Unit * m**3/min
7 = metric tons/yr

Number of source-species combinations with variable emissions scaling factors provided below in (15c) (NSLN1) Default: 0 ! NSLN1 = 0 !

Maximum number of segments used to model each line (MXNSEG) Default: 7 ! MXNSEG = 7 !

The following variables are required only if NLINES > 0. They are used in the buoyant line source plume rise calculations.

Number of distances at which transitional rise is computed Default: 6 ! NLRISE = 6 !

Average building length (XL) (in meters) No default ! XL = .0 !

Average building height (HBL) (in meters) No default ! HBL = .0 !

Average building width (WBL) (in meters) No default ! WBL = .0 !

Average line source width (WML) (in meters) No default ! WML = .0 !

Average separation between buildings (DXL) (in meters) No default ! DXL = .0 !

Average buoyancy parameter (FPRIMEL) (in m**4/s**3) No default ! FPRIMEL = .0 !

!END!

Subgroup (15b)

BUOYANT LINE SOURCE: CONSTANT DATA

Source No.	Beg. X Coordinate (km)	Beg. Y Coordinate (km)	End. X Coordinate (km)	End. Y Coordinate (km)	Release Height[a] (m)	Base Elevation (m)	Emission Rates

---

a
Data for each source are treated as a separate input subgroup
and therefore must end with an input group terminator.

b
An emission rate must be entered for every pollutant modeled.
Enter emission rate of zero for secondary pollutants that are
modeled, but not emitted. Units are specified by ILNTU
(e.g. 1 for g/s).

Subgroup (15c)

BUOYANT LINE SOURCE: VARIABLE EMISSIONS DATA[a]

Use this subgroup to describe temporal variations in the emission
rates given in 15b. Factors entered multiply the rates in 15b.
Skip sources here that have constant emissions.

IVARY determines the type of variation, and is source-specific:
(IVARY) Default: 0
- 0 = Constant
- 1 = Diurnal cycle (24 scaling factors: hours 1-24)
- 2 = Monthly cycle (12 scaling factors: months 1-12)
- 3 = Hour & Season (4 groups of 24 hourly scaling factors, where first group is DEC-JAN-FEB)
- 4 = Speed & Stab. (6 groups of 6 scaling factors, where first group is Stability Class A, and the speed classes have upper bounds (m/s) defined in Group 12
- 5 = Temperature (12 scaling factors, where temperature classes have upper bounds (C) of: 0, 5, 10, 15, 20, 25, 30, 35, 40, 45, 50, 50+)

---
a
Data for each species are treated as a separate input subgroup
and therefore must end with an input group terminator.

INPUT GROUPS: 16a, 16b, 16c -- Volume source parameters

Subgroup (16a)

Number of volume sources with
parameters provided in 16b,c (NVL1) No default ! NVL1 = 0 !

Units used for volume source
emissions below in 16b (IVLU) Default: 1 ! IVLU = 1 !
- 1 = g/s
- 2 = kg/hr
- 3 = lb/hr
- 4 = tons/yr

5 = Odour Unit * m**3/s (vol. flux of odour compound)
6 = Odour Unit * m**3/min
7 = metric tons/yr

Number of source-species
combinations with variable
emissions scaling factors
provided below in (16c) (NSVL1) Default: 0 ! NSVL1 = 0 !

Number of volume sources with
variable location and emission
parameters (NVL2) No default ! NVL2 = 0 !

(If NVL2 > 0, ALL parameter data for
these sources are read from the VOLEMARB.DAT file(s))

!END!

Subgroup (16b)
---

a
VOLUME SOURCE: CONSTANT DATA
---

b

X UTM Coordinate (km)	Y UTM Coordinate (km)	Effect. Height (m)	Base Elevation (m)	Initial Sigma y (m)	Initial Sigma z (m)	Emission Rates
---	---	---	---	---	---	

---
a
Data for each source are treated as a separate input subgroup
and therefore must end with an input group terminator.

b
An emission rate must be entered for every pollutant modeled.
Enter emission rate of zero for secondary pollutants that are
modeled, but not emitted. Units are specified by IVLU
(e.g. 1 for g/s).

Subgroup (16c)
---

a
VOLUME SOURCE: VARIABLE EMISSIONS DATA

Use this subgroup to describe temporal variations in the emission
rates given in 16b. Factors entered multiply the rates in 16b.
Skip sources here that have constant emissions. For more elaborate
variation in source parameters, use VOLEMARB.DAT and NVL2 > 0.

IVARY determines the type of variation, and is source-specific:
(IVARY) Default: 0
0 = Constant
1 = Diurnal cycle (24 scaling factors: hours 1-24)
2 = Monthly cycle (12 scaling factors: months 1-12)
3 = Hour & Season (4 groups of 24 hourly scaling factors,
where first group is DEC-JAN-FEB)
4 = Speed & Stab. (6 groups of 6 scaling factors, where
first group is Stability Class A,
and the speed classes have upper
bounds (m/s) defined in Group 12
5 = Temperature (12 scaling factors, where temperature
classes have upper bounds (C) of:
0, 5, 10, 15, 20, 25, 30, 35, 40,
45, 50, 50+)

---
a
Data for each species are treated as a separate input subgroup
and therefore must end with an input group terminator.

INPUT GROUPS: 17a & 17b -- Non-gridded (discrete) receptor information
---

Subgroup (17a)

Number of non-gridded receptors (NREC) No default ! NREC = 500 !

!END!

Subgroup (17b)
---

a
NON-GRIDDED (DISCRETE) RECEPTOR DATA

Receptor No.	X Coordinate (km)	Y Coordinate (km)	Ground Elevation (m)	Height b Above Ground (m)

RECEPTORS OBTAINED FROM THE NPS/FWS EXTRACTION PROGRAM
ALL RECEPTORS ARE LCC (KM)

500 OKEFENOKEE NWA RECEPTORS REPRESENTING ALL NPS BOUNDARY RECEPTORS

```
  1 ! X = 1418.322, -931.103,  36.000 ! !END!
  2 ! X = 1419.904, -930.843,  36.000 ! !END!
  3 ! X = 1400.612, -932.109,  27.000 ! !END!
  4 ! X = 1402.194, -931.852,  27.000 ! !END!
  5 ! X = 1403.777, -931.594,  30.000 ! !END!
  6 ! X = 1405.360, -931.337,  36.000 ! !END!
  7 ! X = 1406.942, -931.079,  36.000 ! !END!
  8 ! X = 1408.525, -930.821,  36.000 ! !END!
  9 ! X = 1410.108, -930.562,  37.000 ! !END!
 10 ! X = 1411.690, -930.303,  36.000 ! !END!
 11 ! X = 1413.272, -930.044,  36.000 ! !END!
 12 ! X = 1414.855, -929.785,  36.000 ! !END!
 13 ! X = 1416.437, -929.525,  36.000 ! !END!
 14 ! X = 1418.019, -929.265,  36.000 ! !END!
 15 ! X = 1419.602, -929.005,  36.000 ! !END!
 16 ! X = 1421.184, -928.745,  36.000 ! !END!
 17 ! X = 1397.148, -930.783,  27.000 ! !END!
 18 ! X = 1398.731, -930.527,  27.000 ! !END!
 19 ! X = 1400.313, -930.270,  30.000 ! !END!
 20 ! X = 1401.896, -930.013,  27.000 ! !END!
 21 ! X = 1403.478, -929.756,  31.000 ! !END!
 22 ! X = 1405.060, -929.498,  36.000 ! !END!
 23 ! X = 1406.643, -929.241,  36.000 ! !END!
 24 ! X = 1408.225, -928.982,  36.000 ! !END!
 25 ! X = 1409.807, -928.724,  36.000 ! !END!
 26 ! X = 1411.389, -928.465,  36.000 ! !END!
 27 ! X = 1412.971, -928.206,  36.000 ! !END!
 28 ! X = 1414.553, -927.947,  36.000 ! !END!
 29 ! X = 1416.135, -927.688,  36.000 ! !END!
 30 ! X = 1417.717, -927.428,  36.000 ! !END!
 31 ! X = 1419.299, -927.168,  36.000 ! !END!
 32 ! X = 1420.881, -926.907,  36.000 ! !END!
 33 ! X = 1422.463, -926.646,  36.000 ! !END!
 34 ! X = 1395.268, -929.201,  27.000 ! !END!
 35 ! X = 1396.851, -928.945,  30.000 ! !END!
 36 ! X = 1398.433, -928.688,  31.000 ! !END!
 37 ! X = 1400.015, -928.432,  32.000 ! !END!
 38 ! X = 1401.597, -928.175,  27.000 ! !END!
 39 ! X = 1403.179, -927.918,  27.000 ! !END!
 40 ! X = 1404.761, -927.660,  36.000 ! !END!
 41 ! X = 1406.343, -927.402,  36.000 ! !END!
 42 ! X = 1407.925, -927.144,  36.000 ! !END!
 43 ! X = 1409.507, -926.886,  36.000 ! !END!
 44 ! X = 1411.089, -926.627,  36.000 ! !END!
 45 ! X = 1412.670, -926.368,  36.000 ! !END!
 46 ! X = 1414.252, -926.109,  36.000 ! !END!
 47 ! X = 1415.834, -925.850,  36.000 ! !END!
 48 ! X = 1417.415, -925.590,  36.000 ! !END!
 49 ! X = 1418.997, -925.330,  37.000 ! !END!
 50 ! X = 1420.578, -925.069,  36.000 ! !END!
 51 ! X = 1393.389, -927.618,  27.000 ! !END!
```

```
 52 ! X = 1394.971,  -927.362,  27.000 ! !END!
 53 ! X = 1396.553,  -927.106,  27.000 ! !END!
 54 ! X = 1398.135,  -926.850,  27.000 ! !END!
 55 ! X = 1399.717,  -926.594,  30.000 ! !END!
 56 ! X = 1401.298,  -926.337,  34.000 ! !END!
 57 ! X = 1402.880,  -926.080,  36.000 ! !END!
 58 ! X = 1404.462,  -925.822,  36.000 ! !END!
 59 ! X = 1406.043,  -925.564,  36.000 ! !END!
 60 ! X = 1407.625,  -925.306,  36.000 ! !END!
 61 ! X = 1409.206,  -925.048,  36.000 ! !END!
 62 ! X = 1410.788,  -924.789,  36.000 ! !END!
 63 ! X = 1412.369,  -924.531,  36.000 ! !END!
 64 ! X = 1413.951,  -924.271,  36.000 ! !END!
 65 ! X = 1415.532,  -924.012,  36.000 ! !END!
 66 ! X = 1417.113,  -923.752,  36.000 ! !END!
 67 ! X = 1420.276,  -923.232,  36.000 ! !END!
 68 ! X = 1393.092,  -925.780,  33.000 ! !END!
 69 ! X = 1394.674,  -925.524,  38.000 ! !END!
 70 ! X = 1396.255,  -925.268,  29.000 ! !END!
 71 ! X = 1397.837,  -925.012,  32.000 ! !END!
 72 ! X = 1399.418,  -924.755,  36.000 ! !END!
 73 ! X = 1401.000,  -924.499,  36.000 ! !END!
 74 ! X = 1402.581,  -924.241,  36.000 ! !END!
 75 ! X = 1404.162,  -923.984,  37.000 ! !END!
 76 ! X = 1405.744,  -923.726,  38.000 ! !END!
 77 ! X = 1407.325,  -923.468,  37.000 ! !END!
 78 ! X = 1408.906,  -923.210,  37.000 ! !END!
 79 ! X = 1410.487,  -922.952,  36.000 ! !END!
 80 ! X = 1412.068,  -922.693,  36.000 ! !END!
 81 ! X = 1413.649,  -922.434,  36.000 ! !END!
 82 ! X = 1415.230,  -922.174,  36.000 ! !END!
 83 ! X = 1416.811,  -921.915,  36.000 ! !END!
 84 ! X = 1419.973,  -921.394,  36.000 ! !END!
 85 ! X = 1421.554,  -921.134,  36.000 ! !END!
 86 ! X = 1392.795,  -923.941,  38.000 ! !END!
 87 ! X = 1394.376,  -923.686,  37.000 ! !END!
 88 ! X = 1395.958,  -923.430,  38.000 ! !END!
 89 ! X = 1397.539,  -923.174,  36.000 ! !END!
 90 ! X = 1399.120,  -922.917,  36.000 ! !END!
 91 ! X = 1400.701,  -922.660,  36.000 ! !END!
 92 ! X = 1402.282,  -922.403,  38.000 ! !END!
 93 ! X = 1403.863,  -922.146,  38.000 ! !END!
 94 ! X = 1405.444,  -921.888,  37.000 ! !END!
 95 ! X = 1407.025,  -921.631,  37.000 ! !END!
 96 ! X = 1408.606,  -921.372,  36.000 ! !END!
 97 ! X = 1410.187,  -921.114,  36.000 ! !END!
 98 ! X = 1411.767,  -920.855,  36.000 ! !END!
 99 ! X = 1413.348,  -920.596,  36.000 ! !END!
100 ! X = 1414.929,  -920.337,  36.000 ! !END!
101 ! X = 1416.509,  -920.077,  36.000 ! !END!
102 ! X = 1418.090,  -919.817,  36.000 ! !END!
103 ! X = 1419.670,  -919.557,  36.000 ! !END!
104 ! X = 1392.498,  -922.103,  37.000 ! !END!
105 ! X = 1394.079,  -921.847,  38.000 ! !END!
106 ! X = 1395.660,  -921.592,  38.000 ! !END!
107 ! X = 1397.241,  -921.336,  38.000 ! !END!
108 ! X = 1398.822,  -921.079,  36.000 ! !END!
109 ! X = 1400.402,  -920.822,  36.000 ! !END!
110 ! X = 1401.983,  -920.565,  36.000 ! !END!
111 ! X = 1403.564,  -920.308,  36.000 ! !END!
112 ! X = 1405.144,  -920.051,  36.000 ! !END!
113 ! X = 1406.725,  -919.793,  36.000 ! !END!
114 ! X = 1408.305,  -919.535,  36.000 ! !END!
115 ! X = 1409.886,  -919.276,  36.000 ! !END!
116 ! X = 1411.466,  -919.018,  36.000 ! !END!
117 ! X = 1413.047,  -918.759,  36.000 ! !END!
118 ! X = 1414.627,  -918.499,  36.000 ! !END!
119 ! X = 1416.207,  -918.240,  36.000 ! !END!
120 ! X = 1417.787,  -917.980,  36.000 ! !END!
121 ! X = 1419.368,  -917.720,  36.000 ! !END!
122 ! X = 1420.948,  -917.459,  36.000 ! !END!
123 ! X = 1393.782,  -920.009,  37.000 ! !END!
124 ! X = 1395.362,  -919.754,  36.000 ! !END!
125 ! X = 1396.943,  -919.497,  36.000 ! !END!
126 ! X = 1398.523,  -919.241,  36.000 ! !END!
127 ! X = 1400.104,  -918.984,  36.000 ! !END!
128 ! X = 1401.684,  -918.728,  36.000 ! !END!
129 ! X = 1403.264,  -918.470,  36.000 ! !END!
130 ! X = 1404.845,  -918.213,  36.000 ! !END!
```

```
131 ! X = 1406.425,  -917.955,  36.000 !  !END!
132 ! X = 1408.005,  -917.697,  36.000 !  !END!
133 ! X = 1409.585,  -917.439,  36.000 !  !END!
134 ! X = 1411.165,  -917.180,  36.000 !  !END!
135 ! X = 1412.745,  -916.921,  36.000 !  !END!
136 ! X = 1414.325,  -916.662,  36.000 !  !END!
137 ! X = 1415.905,  -916.402,  36.000 !  !END!
138 ! X = 1417.485,  -916.142,  36.000 !  !END!
139 ! X = 1391.904,  -918.427,  37.000 !  !END!
140 ! X = 1393.485,  -918.171,  36.000 !  !END!
141 ! X = 1395.065,  -917.916,  36.000 !  !END!
142 ! X = 1396.645,  -917.660,  36.000 !  !END!
143 ! X = 1398.225,  -917.403,  36.000 !  !END!
144 ! X = 1399.805,  -917.147,  36.000 !  !END!
145 ! X = 1401.385,  -916.890,  36.000 !  !END!
146 ! X = 1402.965,  -916.633,  36.000 !  !END!
147 ! X = 1404.545,  -916.375,  36.000 !  !END!
148 ! X = 1406.125,  -916.117,  36.000 !  !END!
149 ! X = 1407.705,  -915.859,  36.000 !  !END!
150 ! X = 1409.285,  -915.601,  36.000 !  !END!
151 ! X = 1410.864,  -915.342,  36.000 !  !END!
152 ! X = 1412.444,  -915.084,  36.000 !  !END!
153 ! X = 1414.024,  -914.824,  36.000 !  !END!
154 ! X = 1415.603,  -914.565,  36.000 !  !END!
155 ! X = 1417.183,  -914.305,  36.000 !  !END!
156 ! X = 1393.187,  -916.333,  36.000 !  !END!
157 ! X = 1394.767,  -916.078,  36.000 !  !END!
158 ! X = 1396.347,  -915.822,  36.000 !  !END!
159 ! X = 1397.927,  -915.565,  36.000 !  !END!
160 ! X = 1399.507,  -915.309,  36.000 !  !END!
161 ! X = 1401.086,  -915.052,  36.000 !  !END!
162 ! X = 1402.666,  -914.795,  36.000 !  !END!
163 ! X = 1404.245,  -914.538,  36.000 !  !END!
164 ! X = 1405.825,  -914.280,  36.000 !  !END!
165 ! X = 1407.405,  -914.022,  36.000 !  !END!
166 ! X = 1408.984,  -913.764,  36.000 !  !END!
167 ! X = 1410.563,  -913.505,  36.000 !  !END!
168 ! X = 1412.143,  -913.246,  36.000 !  !END!
169 ! X = 1413.722,  -912.987,  36.000 !  !END!
170 ! X = 1415.301,  -912.728,  36.000 !  !END!
171 ! X = 1416.881,  -912.468,  36.000 !  !END!
172 ! X = 1392.890,  -914.495,  36.000 !  !END!
173 ! X = 1394.470,  -914.240,  36.000 !  !END!
174 ! X = 1396.049,  -913.984,  36.000 !  !END!
175 ! X = 1397.629,  -913.728,  36.000 !  !END!
176 ! X = 1399.208,  -913.471,  36.000 !  !END!
177 ! X = 1400.787,  -913.214,  36.000 !  !END!
178 ! X = 1402.367,  -912.957,  36.000 !  !END!
179 ! X = 1403.946,  -912.700,  36.000 !  !END!
180 ! X = 1405.525,  -912.442,  36.000 !  !END!
181 ! X = 1407.104,  -912.184,  36.000 !  !END!
182 ! X = 1408.683,  -911.926,  36.000 !  !END!
183 ! X = 1410.262,  -911.668,  36.000 !  !END!
184 ! X = 1411.841,  -911.409,  36.000 !  !END!
185 ! X = 1413.420,  -911.150,  36.000 !  !END!
186 ! X = 1414.999,  -910.891,  36.000 !  !END!
187 ! X = 1416.578,  -910.631,  36.000 !  !END!
188 ! X = 1418.157,  -910.371,  36.000 !  !END!
189 ! X = 1419.736,  -910.111,  36.000 !  !END!
190 ! X = 1392.593,  -912.657,  36.000 !  !END!
191 ! X = 1394.172,  -912.402,  36.000 !  !END!
192 ! X = 1395.751,  -912.146,  36.000 !  !END!
193 ! X = 1397.330,  -911.890,  36.000 !  !END!
194 ! X = 1398.909,  -911.634,  36.000 !  !END!
195 ! X = 1400.488,  -911.377,  37.000 !  !END!
196 ! X = 1402.067,  -911.120,  37.000 !  !END!
197 ! X = 1403.646,  -910.863,  36.000 !  !END!
198 ! X = 1405.225,  -910.605,  36.000 !  !END!
199 ! X = 1406.804,  -910.347,  36.000 !  !END!
200 ! X = 1408.383,  -910.089,  36.000 !  !END!
201 ! X = 1409.962,  -909.831,  36.000 !  !END!
202 ! X = 1411.540,  -909.572,  36.000 !  !END!
203 ! X = 1413.119,  -909.313,  36.000 !  !END!
204 ! X = 1414.697,  -909.053,  36.000 !  !END!
205 ! X = 1416.276,  -908.794,  36.000 !  !END!
206 ! X = 1417.854,  -908.534,  36.000 !  !END!
207 ! X = 1419.433,  -908.274,  36.000 !  !END!
208 ! X = 1397.032,  -910.052,  36.000 !  !END!
209 ! X = 1398.611,  -909.796,  37.000 !  !END!
```

```
210 ! X = 1400.190, -909.539,  36.000 ! !END!
211 ! X = 1401.768, -909.282,  37.000 ! !END!
212 ! X = 1403.347, -909.025,  36.000 ! !END!
213 ! X = 1404.925, -908.768,  36.000 ! !END!
214 ! X = 1406.504, -908.510,  36.000 ! !END!
215 ! X = 1408.082, -908.252,  36.000 ! !END!
216 ! X = 1409.661, -907.993,  36.000 ! !END!
217 ! X = 1411.239, -907.735,  36.000 ! !END!
218 ! X = 1412.817, -907.476,  36.000 ! !END!
219 ! X = 1414.395, -907.216,  36.000 ! !END!
220 ! X = 1415.974, -906.957,  36.000 ! !END!
221 ! X = 1417.552, -906.697,  36.000 ! !END!
222 ! X = 1419.130, -906.437,  36.000 ! !END!
223 ! X = 1396.734, -908.215,  37.000 ! !END!
224 ! X = 1398.312, -907.958,  36.000 ! !END!
225 ! X = 1399.891, -907.702,  37.000 ! !END!
226 ! X = 1401.469, -907.445,  36.000 ! !END!
227 ! X = 1403.047, -907.188,  36.000 ! !END!
228 ! X = 1404.625, -906.930,  36.000 ! !END!
229 ! X = 1406.204, -906.673,  36.000 ! !END!
230 ! X = 1407.782, -906.415,  36.000 ! !END!
231 ! X = 1409.360, -906.156,  36.000 ! !END!
232 ! X = 1410.938, -905.898,  36.000 ! !END!
233 ! X = 1412.516, -905.639,  36.000 ! !END!
234 ! X = 1414.094, -905.380,  36.000 ! !END!
235 ! X = 1415.671, -905.120,  36.000 ! !END!
236 ! X = 1417.249, -904.860,  36.000 ! !END!
237 ! X = 1418.827, -904.600,  37.000 ! !END!
238 ! X = 1388.545, -907.654,  32.000 ! !END!
239 ! X = 1390.123, -907.399,  27.000 ! !END!
240 ! X = 1398.014, -906.121,  36.000 ! !END!
241 ! X = 1399.592, -905.865,  37.000 ! !END!
242 ! X = 1401.170, -905.608,  37.000 ! !END!
243 ! X = 1402.748, -905.351,  36.000 ! !END!
244 ! X = 1404.325, -905.093,  36.000 ! !END!
245 ! X = 1405.903, -904.835,  36.000 ! !END!
246 ! X = 1407.481, -904.577,  36.000 ! !END!
247 ! X = 1409.059, -904.319,  36.000 ! !END!
248 ! X = 1410.636, -904.061,  36.000 ! !END!
249 ! X = 1412.214, -903.802,  36.000 ! !END!
250 ! X = 1413.792, -903.543,  36.000 ! !END!
251 ! X = 1415.369, -903.283,  36.000 ! !END!
252 ! X = 1416.947, -903.023,  36.000 ! !END!
253 ! X = 1418.524, -902.763,  36.000 ! !END!
254 ! X = 1380.358, -907.086,  36.000 ! !END!
255 ! X = 1381.936, -906.833,  36.000 ! !END!
256 ! X = 1383.514, -906.579,  36.000 ! !END!
257 ! X = 1385.092, -906.325,  36.000 ! !END!
258 ! X = 1386.670, -906.071,  34.000 ! !END!
259 ! X = 1388.248, -905.817,  29.000 ! !END!
260 ! X = 1389.826, -905.562,  30.000 ! !END!
261 ! X = 1397.715, -904.284,  36.000 ! !END!
262 ! X = 1399.293, -904.027,  36.000 ! !END!
263 ! X = 1400.871, -903.770,  36.000 ! !END!
264 ! X = 1402.448, -903.513,  36.000 ! !END!
265 ! X = 1404.026, -903.256,  36.000 ! !END!
266 ! X = 1405.603, -902.998,  36.000 ! !END!
267 ! X = 1407.181, -902.740,  36.000 ! !END!
268 ! X = 1408.758, -902.482,  36.000 ! !END!
269 ! X = 1410.335, -902.224,  36.000 ! !END!
270 ! X = 1411.913, -901.965,  36.000 ! !END!
271 ! X = 1413.490, -901.706,  36.000 ! !END!
272 ! X = 1415.067, -901.446,  36.000 ! !END!
273 ! X = 1416.644, -901.187,  36.000 ! !END!
274 ! X = 1418.221, -900.927,  36.000 ! !END!
275 ! X = 1380.063, -905.248,  36.000 ! !END!
276 ! X = 1381.641, -904.995,  36.000 ! !END!
277 ! X = 1383.219, -904.741,  36.000 ! !END!
278 ! X = 1384.796, -904.487,  32.000 ! !END!
279 ! X = 1386.374, -904.233,  30.000 ! !END!
280 ! X = 1387.952, -903.979,  33.000 ! !END!
281 ! X = 1389.529, -903.724,  33.000 ! !END!
282 ! X = 1392.684, -903.214,  30.000 ! !END!
283 ! X = 1394.262, -902.958,  36.000 ! !END!
284 ! X = 1395.839, -902.703,  36.000 ! !END!
285 ! X = 1397.417, -902.446,  36.000 ! !END!
286 ! X = 1398.994, -902.190,  36.000 ! !END!
287 ! X = 1400.571, -901.933,  36.000 ! !END!
288 ! X = 1402.149, -901.676,  36.000 ! !END!
```

```
289 ! X = 1403.726,  -901.419,  36.000 !  !END!
290 ! X = 1405.303,  -901.161,  36.000 !  !END!
291 ! X = 1406.880,  -900.904,  36.000 !  !END!
292 ! X = 1408.457,  -900.645,  36.000 !  !END!
293 ! X = 1410.034,  -900.387,  36.000 !  !END!
294 ! X = 1411.611,  -900.128,  36.000 !  !END!
295 ! X = 1413.188,  -899.869,  36.000 !  !END!
296 ! X = 1414.765,  -899.610,  36.000 !  !END!
297 ! X = 1416.342,  -899.350,  36.000 !  !END!
298 ! X = 1417.918,  -899.090,  36.000 !  !END!
299 ! X = 1379.768,  -903.410,  36.000 !  !END!
300 ! X = 1381.346,  -903.157,  36.000 !  !END!
301 ! X = 1382.923,  -902.904,  34.000 !  !END!
302 ! X = 1384.501,  -902.650,  30.000 !  !END!
303 ! X = 1386.078,  -902.396,  33.000 !  !END!
304 ! X = 1387.655,  -902.141,  33.000 !  !END!
305 ! X = 1389.233,  -901.887,  33.000 !  !END!
306 ! X = 1390.810,  -901.632,  31.000 !  !END!
307 ! X = 1392.387,  -901.377,  31.000 !  !END!
308 ! X = 1393.964,  -901.121,  36.000 !  !END!
309 ! X = 1395.541,  -900.865,  36.000 !  !END!
310 ! X = 1397.118,  -900.609,  36.000 !  !END!
311 ! X = 1398.695,  -900.353,  36.000 !  !END!
312 ! X = 1400.272,  -900.096,  36.000 !  !END!
313 ! X = 1401.849,  -899.839,  36.000 !  !END!
314 ! X = 1403.426,  -899.582,  36.000 !  !END!
315 ! X = 1405.003,  -899.324,  36.000 !  !END!
316 ! X = 1406.579,  -899.067,  36.000 !  !END!
317 ! X = 1408.156,  -898.809,  36.000 !  !END!
318 ! X = 1409.733,  -898.550,  36.000 !  !END!
319 ! X = 1411.309,  -898.291,  36.000 !  !END!
320 ! X = 1412.886,  -898.032,  36.000 !  !END!
321 ! X = 1414.463,  -897.773,  36.000 !  !END!
322 ! X = 1416.039,  -897.514,  36.000 !  !END!
323 ! X = 1417.615,  -897.254,  36.000 !  !END!
324 ! X = 1381.051,  -901.319,  36.000 !  !END!
325 ! X = 1382.628,  -901.066,  32.000 !  !END!
326 ! X = 1384.205,  -900.812,  33.000 !  !END!
327 ! X = 1385.782,  -900.558,  35.000 !  !END!
328 ! X = 1387.359,  -900.304,  35.000 !  !END!
329 ! X = 1388.936,  -900.049,  33.000 !  !END!
330 ! X = 1390.513,  -899.795,  31.000 !  !END!
331 ! X = 1392.089,  -899.539,  30.000 !  !END!
332 ! X = 1393.666,  -899.284,  31.000 !  !END!
333 ! X = 1395.243,  -899.028,  36.000 !  !END!
334 ! X = 1396.820,  -898.772,  36.000 !  !END!
335 ! X = 1398.396,  -898.516,  37.000 !  !END!
336 ! X = 1399.973,  -898.259,  36.000 !  !END!
337 ! X = 1401.550,  -898.002,  36.000 !  !END!
338 ! X = 1403.126,  -897.745,  36.000 !  !END!
339 ! X = 1404.703,  -897.488,  36.000 !  !END!
340 ! X = 1406.279,  -897.230,  36.000 !  !END!
341 ! X = 1407.855,  -896.972,  36.000 !  !END!
342 ! X = 1409.432,  -896.713,  36.000 !  !END!
343 ! X = 1411.008,  -896.455,  36.000 !  !END!
344 ! X = 1412.584,  -896.196,  36.000 !  !END!
345 ! X = 1414.160,  -895.937,  36.000 !  !END!
346 ! X = 1415.736,  -895.677,  36.000 !  !END!
347 ! X = 1417.313,  -895.417,  36.000 !  !END!
348 ! X = 1382.332,  -899.228,  32.000 !  !END!
349 ! X = 1383.909,  -898.975,  36.000 !  !END!
350 ! X = 1385.486,  -898.721,  36.000 !  !END!
351 ! X = 1387.062,  -898.467,  36.000 !  !END!
352 ! X = 1388.639,  -898.212,  33.000 !  !END!
353 ! X = 1390.215,  -897.957,  31.000 !  !END!
354 ! X = 1391.792,  -897.702,  32.000 !  !END!
355 ! X = 1393.368,  -897.447,  36.000 !  !END!
356 ! X = 1394.945,  -897.191,  36.000 !  !END!
357 ! X = 1396.521,  -896.935,  36.000 !  !END!
358 ! X = 1398.098,  -896.679,  36.000 !  !END!
359 ! X = 1399.674,  -896.422,  36.000 !  !END!
360 ! X = 1401.250,  -896.165,  36.000 !  !END!
361 ! X = 1402.826,  -895.908,  36.000 !  !END!
362 ! X = 1404.402,  -895.651,  36.000 !  !END!
363 ! X = 1405.978,  -895.393,  36.000 !  !END!
364 ! X = 1407.554,  -895.135,  36.000 !  !END!
365 ! X = 1409.130,  -894.877,  36.000 !  !END!
366 ! X = 1410.706,  -894.618,  36.000 !  !END!
367 ! X = 1412.282,  -894.359,  36.000 !  !END!
```

```
368 ! X = 1413.858,  -894.100,  36.000 ! !END!
369 ! X = 1415.434,  -893.841,  36.000 ! !END!
370 ! X = 1417.010,  -893.581,  36.000 ! !END!
371 ! X = 1383.613,  -897.137,  36.000 ! !END!
372 ! X = 1385.190,  -896.883,  36.000 ! !END!
373 ! X = 1386.766,  -896.629,  36.000 ! !END!
374 ! X = 1388.342,  -896.375,  33.000 ! !END!
375 ! X = 1389.918,  -896.120,  29.000 ! !END!
376 ! X = 1391.495,  -895.865,  36.000 ! !END!
377 ! X = 1393.071,  -895.610,  36.000 ! !END!
378 ! X = 1394.647,  -895.354,  36.000 ! !END!
379 ! X = 1396.223,  -895.098,  36.000 ! !END!
380 ! X = 1397.799,  -894.842,  36.000 ! !END!
381 ! X = 1399.375,  -894.585,  36.000 ! !END!
382 ! X = 1400.951,  -894.329,  36.000 ! !END!
383 ! X = 1402.526,  -894.072,  36.000 ! !END!
384 ! X = 1404.102,  -893.814,  36.000 ! !END!
385 ! X = 1405.678,  -893.557,  36.000 ! !END!
386 ! X = 1407.254,  -893.299,  36.000 ! !END!
387 ! X = 1408.829,  -893.040,  36.000 ! !END!
388 ! X = 1410.405,  -892.782,  36.000 ! !END!
389 ! X = 1411.980,  -892.523,  36.000 ! !END!
390 ! X = 1413.556,  -892.264,  36.000 ! !END!
391 ! X = 1415.131,  -892.005,  36.000 ! !END!
392 ! X = 1416.707,  -891.745,  36.000 ! !END!
393 ! X = 1384.893,  -895.046,  37.000 ! !END!
394 ! X = 1386.469,  -894.792,  35.000 ! !END!
395 ! X = 1388.045,  -894.538,  30.000 ! !END!
396 ! X = 1389.621,  -894.283,  36.000 ! !END!
397 ! X = 1391.197,  -894.028,  36.000 ! !END!
398 ! X = 1392.773,  -893.773,  36.000 ! !END!
399 ! X = 1394.349,  -893.517,  36.000 ! !END!
400 ! X = 1395.924,  -893.261,  36.000 ! !END!
401 ! X = 1397.500,  -893.005,  36.000 ! !END!
402 ! X = 1399.076,  -892.749,  36.000 ! !END!
403 ! X = 1400.651,  -892.492,  36.000 ! !END!
404 ! X = 1402.227,  -892.235,  36.000 ! !END!
405 ! X = 1403.802,  -891.978,  36.000 ! !END!
406 ! X = 1405.377,  -891.720,  36.000 ! !END!
407 ! X = 1406.953,  -891.462,  36.000 ! !END!
408 ! X = 1408.528,  -891.204,  36.000 ! !END!
409 ! X = 1410.103,  -890.945,  36.000 ! !END!
410 ! X = 1411.679,  -890.687,  36.000 ! !END!
411 ! X = 1413.254,  -890.428,  36.000 ! !END!
412 ! X = 1414.829,  -890.168,  36.000 ! !END!
413 ! X = 1416.404,  -889.909,  36.000 ! !END!
414 ! X = 1387.749,  -892.701,  36.000 ! !END!
415 ! X = 1389.324,  -892.446,  36.000 ! !END!
416 ! X = 1390.900,  -892.191,  36.000 ! !END!
417 ! X = 1392.475,  -891.936,  36.000 ! !END!
418 ! X = 1394.051,  -891.680,  36.000 ! !END!
419 ! X = 1395.626,  -891.424,  36.000 ! !END!
420 ! X = 1397.201,  -891.168,  36.000 ! !END!
421 ! X = 1398.776,  -890.912,  36.000 ! !END!
422 ! X = 1400.352,  -890.655,  36.000 ! !END!
423 ! X = 1401.927,  -890.398,  36.000 ! !END!
424 ! X = 1403.502,  -890.141,  36.000 ! !END!
425 ! X = 1405.077,  -889.883,  36.000 ! !END!
426 ! X = 1406.652,  -889.626,  36.000 ! !END!
427 ! X = 1408.227,  -889.367,  36.000 ! !END!
428 ! X = 1409.802,  -889.109,  36.000 ! !END!
429 ! X = 1411.377,  -888.850,  36.000 ! !END!
430 ! X = 1412.952,  -888.591,  36.000 ! !END!
431 ! X = 1414.526,  -888.332,  36.000 ! !END!
432 ! X = 1416.101,  -888.073,  36.000 ! !END!
433 ! X = 1390.602,  -890.354,  41.000 ! !END!
434 ! X = 1392.177,  -890.099,  37.000 ! !END!
435 ! X = 1393.752,  -889.843,  36.000 ! !END!
436 ! X = 1395.327,  -889.588,  36.000 ! !END!
437 ! X = 1396.902,  -889.332,  36.000 ! !END!
438 ! X = 1398.477,  -889.075,  36.000 ! !END!
439 ! X = 1400.052,  -888.819,  36.000 ! !END!
440 ! X = 1401.627,  -888.562,  36.000 ! !END!
441 ! X = 1403.202,  -888.305,  36.000 ! !END!
442 ! X = 1404.777,  -888.047,  36.000 ! !END!
443 ! X = 1406.351,  -887.789,  36.000 ! !END!
444 ! X = 1407.926,  -887.531,  36.000 ! !END!
445 ! X = 1409.500,  -887.273,  36.000 ! !END!
446 ! X = 1411.075,  -887.014,  36.000 ! !END!
```

```
447 ! X = 1412.650, -886.755,  36.000 ! !END!
448 ! X = 1414.224, -886.496,  36.000 ! !END!
449 ! X = 1415.798, -886.236,  36.000 ! !END!
450 ! X = 1393.454, -888.007,  36.000 ! !END!
451 ! X = 1395.029, -887.751,  36.000 ! !END!
452 ! X = 1396.604, -887.495,  36.000 ! !END!
453 ! X = 1398.178, -887.239,  36.000 ! !END!
454 ! X = 1399.753, -886.982,  36.000 ! !END!
455 ! X = 1401.327, -886.725,  36.000 ! !END!
456 ! X = 1402.902, -886.468,  36.000 ! !END!
457 ! X = 1404.476, -886.211,  36.000 ! !END!
458 ! X = 1406.050, -885.953,  36.000 ! !END!
459 ! X = 1407.625, -885.695,  36.000 ! !END!
460 ! X = 1409.199, -885.437,  36.000 ! !END!
461 ! X = 1410.773, -885.178,  36.000 ! !END!
462 ! X = 1412.347, -884.919,  36.000 ! !END!
463 ! X = 1413.922, -884.660,  36.000 ! !END!
464 ! X = 1415.496, -884.401,  37.000 ! !END!
465 ! X = 1393.156, -886.170,  37.000 ! !END!
466 ! X = 1394.731, -885.914,  36.000 ! !END!
467 ! X = 1396.305, -885.658,  36.000 ! !END!
468 ! X = 1397.879, -885.402,  36.000 ! !END!
469 ! X = 1399.453, -885.146,  36.000 ! !END!
470 ! X = 1401.028, -884.889,  36.000 ! !END!
471 ! X = 1402.602, -884.632,  36.000 ! !END!
472 ! X = 1404.176, -884.374,  36.000 ! !END!
473 ! X = 1405.750, -884.117,  36.000 ! !END!
474 ! X = 1407.324, -883.859,  36.000 ! !END!
475 ! X = 1408.898, -883.601,  36.000 ! !END!
476 ! X = 1410.471, -883.342,  36.000 ! !END!
477 ! X = 1412.045, -883.083,  36.000 ! !END!
478 ! X = 1394.432, -884.078,  37.000 ! !END!
479 ! X = 1396.006, -883.822,  37.000 ! !END!
480 ! X = 1397.580, -883.566,  37.000 ! !END!
481 ! X = 1399.154, -883.309,  37.000 ! !END!
482 ! X = 1400.728, -883.053,  37.000 ! !END!
483 ! X = 1402.302, -882.795,  37.000 ! !END!
484 ! X = 1403.875, -882.538,  37.000 ! !END!
485 ! X = 1405.449, -882.281,  37.000 ! !END!
486 ! X = 1407.023, -882.023,  37.000 ! !END!
487 ! X = 1408.596, -881.764,  37.000 ! !END!
488 ! X = 1397.281, -881.729,  37.000 ! !END!
489 ! X = 1398.855, -881.473,  37.000 ! !END!
490 ! X = 1400.428, -881.216,  37.000 ! !END!
491 ! X = 1402.001, -880.959,  37.000 ! !END!
492 ! X = 1403.575, -880.702,  37.000 ! !END!
493 ! X = 1405.148, -880.444,  37.000 ! !END!
494 ! X = 1396.982, -879.893,  37.000 ! !END!
495 ! X = 1398.555, -879.637,  37.000 ! !END!
496 ! X = 1400.128, -879.380,  37.000 ! !END!
497 ! X = 1401.701, -879.123,  37.000 ! !END!
498 ! X = 1403.274, -878.866,  37.000 ! !END!
499 ! X = 1399.829, -877.544,  37.000 ! !END!
500 ! X = 1401.401, -877.287,  37.000 ! !END!
```

a
Data for each receptor are treated as a separate input subgroup and therefore must end with an input group terminator.

b
Receptor height above ground is optional. If no value is entered, the receptor is placed on the ground.

POSTUTIL INPUT FOR DEPOSITION

```
SITHE-GLOBAL LIVE OAKS, POSTUTIL FOR TOTAL S AND N DEPOSITION   10/8/08
2 CTS ON NATURAL GAS + HEATER
4-km FLORIDA DOMAIN, 2001, IMPACTS AT WOLF ISLAND AND OKEFENOKEE NWAS

---------------- Run title (3 lines) ----------------------------------------

                POSTUTIL MODEL CONTROL FILE
                ---------------------------

-------------------------------------------------------------------------------

INPUT GROUP: 0 -- Input and Output File Names
---------------

--------------
Subgroup (0a)
--------------

Output Files
------------

 File         Default File Name
 ----         -----------------
 List File     POSTUTIL.LST      ! UTLLST =PUTDEP.LST   !
 Data File      MODEL.DAT        ! UTLDAT =PUTDEP.DEP   !


Input Files
-----------

 Meteorological data files are needed for the HNO3/NO3 partition option.
 The met data file is the 'CALMET.DAT' format file used in the CALPUFF
 simulation.  If multiple CALMET files had been used in sequence, you
 may list all of these files in subgroup 0b.  Specify the total number
 of CALMET files runs you need to use, and provide the filename for each
 in subgroup 0b.

    Number of CALMET data files (NFILES)
                          Default: 0      ! NMET    = 0   !


 A number of CALPUFF data files may be processed in this application.
 The files may represent individual CALPUFF simulations that were made
 for a specific set of species and/or sources.  Specify the total number
 of CALPUFF runs you wish to combine, and provide the filename for each
 in subgroup 0b.

    Number of CALPUFF data files (NFILES)
                          Default: 1      ! NFILES  = 2  !


 All filenames will be converted to lower case if LCFILES = T
 Otherwise, if LCFILES = F, filenames will be converted to UPPER CASE

    Convert filenames to lower case?  Default: T     ! LCFILES = T !
       T = lower case
       F = UPPER CASE

!END!

-------------------------------------------------------------
 NOTE: file/path names can be up to 70 characters in length
-------------------------------------------------------------

--------------
Subgroup (0b)
--------------

NMET CALMET Data Files:

Input File     Default File Name
-----------    -----------------
  1          MET.DAT          * UTLMET =CALMET.DAT  * *END*


Input File     Default File Name
-----------    -----------------
  1          CALPUFF.DAT       ! MODDAT =..\PUFFAVE.DRY  ! !END!
  2          CALPUFF.DAT       ! MODDAT =..\PUFFAVE.WET  ! !END!
```

Note: provide NMET lines of the form * UTLMET = name * *END*
and NFILES lines of the form * MODDAT = name * *END*
where the * should be replaced with an exclamation point,
the special delimiter character.

INPUT GROUP: 1 -- General run control parameters

Starting date: Year (ISYR) -- No default ! ISYR = 2001 !
Month (ISMO) -- No default ! ISMO = 1 !
Day (ISDY) -- No default ! ISDY = 1 !
Hour (ISHR) -- No default ! ISHR = 1 !

Number of periods to process
(NPER) -- No default ! NPER = 8760 !

Number of species to process from CALPUFF runs
(NSPECINP) -- No default ! NSPECINP = 6 !

Number of species to write to output file
(NSPECOUT) -- No default ! NSPECOUT = 2 !

Number of species to compute from those modeled
(must be no greater than NSPECOUT)
(NSPECCMP) -- No default ! NSPECCMP = 2 !

When multiple files are used, a species name may appear in more than one file. Data for this species will be summed (appropriate if the CALPUFF runs use different source groups). If this summing is not appropriate, remove duplicate species from the file(s).

Stop run if duplicate species names
are found? (MDUPLCT) Default: 0 ! MDUPLCT = 0 !
0 = no (i.e., duplicate species are summed)
1 = yes (i.e., run is halted)

Data for each species in a CALPUFF data file may also be scaled as they are read. This can be done to alter the emission rate of all sources that were modeled in a particular CALPUFF application. The scaling factor for each species is entered in Subgroup (2d), for each file for which scaling is requested.

Number of CALPUFF data files that will be scaled
(must be no greater than NFILES)
(NSCALED) Default: 0 ! NSCALED = 0 !

Option to recompute the HNO3/NO3 concentration partition prior to performing other actions. This option will NOT alter any deposition fluxes contained in the CALPUFF file(s). Two partition selections are provided. The first (MNITRATE=1) computes the partition for the TOTAL (all sources) concentration fields (SO4, NO3, HNO3; NH3), and the second (MNITRATE=2) uses this partition (from a previous application of POSTUTIL) to compute the partition for individual source groups.

Required information for MNITRATE=1 includes:
species NO3, HNO3, and SO4
NH3 concentration(s)
met. data file for RH and T

Required information for MNITRATE=2 includes:
species NO3 and HNO3 for a source group
species NO3ALL and HNO3ALL for all source groups, properly partitioned

Recompute the HNO3/NO3 partition for concentrations?
(MNITRATE) Default: 0 ! MNITRATE = 0 !
0 = no
1 = yes, for all sources combined
2 = yes, for a source group

Ammonia concentrations may be available as a modeled species in

```
   the CALPUFF files.  When NH3 is listed as a processed species in
   Subgroup (2a) (as one of the NSPECINP ASPECI entries), the
   modeled values will be used in the chemical equilibrium calculation.
   If NH3 is not on this list, the default background value listed
   below will be used.
   Default ammonia concentration (ppb) used for HNO3/NO3 partition:
   (BCKNH3) in ppb              Default: 10.    ! BCKNH3 = 0.5 !

!END!
-------------------------------------------------------------------------------

INPUT GROUP: 2 -- Species Processing Information
---------------

--------------
Subgroup (2a)
--------------

 The following NSPECINP species will be processed:

! ASPECI =       SO2 !       !END!
! ASPECI =       SO4 !       !END!
! ASPECI =       NOX !       !END!
! ASPECI =      HNO3 !       !END!
! ASPECI =       NO3 !       !END!
! ASPECI =      PM10 !       !END!


--------------
Subgroup (2b)
--------------

 The following NSPECOUT species will be written:

! ASPECO =         N !       !END!
! ASPECO =         S !       !END!

--------------
Subgroup (2c)
--------------

 The following NSPECCMP species will be computed by scaling and summing
 one or more of the processed input species.  Identify the name(s) of
 the computed species and provide the scaling factors for each of the
 NSPECINP input species (NSPECCMP groups of NSPECINP+1 lines each):


! CSPECCMP =       N !
!    SO2  =    0.0 !
!    SO4  =    0.292 !
!    NOX  =    0.304 !
!   HNO3  =    0.222 !
!    NO3  =    0.452 !
!   PM10  =    0.0 !
!END!

! CSPECCMP =       S !
!    SO2  =    0.500 !
!    SO4  =    0.333 !
!    NOX  =    0.0 !
!   HNO3  =    0.0 !
!    NO3  =    0.0 !
!   PM10  =    0.0 !
!END!

--------------
Subgroup (2d)
--------------

 Each species in NSCALED CALPUFF data files may be scaled before being
 processed (e.g., to change the emission rate for all sources modeled
 in the run that produced a data file).  For each file, identify the
 file name and then provide the name(s) of the scaled species and the
 corresponding scaling factors (A,B where x' = Ax+B).

          A(Default=1.0)     B(Default=0.0)
          --------------     --------------
```

POSTUTIL INPUT FOR VISIBILITY STEP 1

```
SITHE-GLOBAL LIVE OAKS, POSTUTIL FOR VISIBILITY IMPACTS   10/8/08
2 CTS ON NATURAL GAS + HEATER
4-km FLORIDA DOMAIN, 2001, IMPACTS AT OKEFENOKEE NWAS

---------------- Run title (3 lines) ----------------------------------------

                POSTUTIL MODEL CONTROL FILE
                ---------------------------

-------------------------------------------------------------------------------

INPUT GROUP: 0 -- Input and Output File Names
---------------

---------------
Subgroup (0a)
---------------

Output Files
------------

 File          Default File Name
 ----          -----------------
 List File     POSTUTIL.LST      ! UTLLST =PUTVIS.LST   !
 Data File      MODEL.DAT        ! UTLDAT =PUTVIS.CON   !


Input Files
-----------

 A time-varying file of "background" concentrations can be included
 when the ammonia-limiting method (ALM) for setting the HNO3/NO3
 concentration partition is accomplished in 1 step.  This option
 is selected by setting MNITRATE=3 in Input Group 1.
 Species required in the "background" concentration file are:
 SO4, NO3, HNO3 and TNH3 (total NH3).

 File          Default File Name
 ----          -----------------
 BCKG File      BCKGALM.DAT       * BCKGALM =BCKGALM.DAT    *


 A number of CALPUFF data files may be processed in this application.
 The files may represent individual CALPUFF simulations that were made
 for a specific set of species and/or sources.  Specify the total number
 of CALPUFF runs you wish to combine, and provide the filename for each
 in subgroup 0b.

    Number of CALPUFF data files (NFILES)
                         Default: 1      ! NFILES  = 1   !


 Meteorological data files are needed for the HNO3/NO3 partition option.
 Three types of meteorological data files can be used:
     METFM= 0 - CALMET.DAT
     METFM= 1 - 1-D file with RH, Temp and Rhoair timeseries
     METFM= 2 - 2-D files with either Rh, Temp or Rhoair in each
            (3 2_D files are needed)
    The default is to use CALMET.DAT files.

                         Default: 0      ! METFM   = 0   !


 Multiple meteorological data files may be used in sequence to span the
 processing period.  Specify the number of time-period files (NMET) that
 you need to use, and provide a filename for each in subgroup 0b.
 - NMET is 0 if no meteorological files are provided
 - NMET is 1 if METFM=1 (multiple file feature is not available)
 - NMET is 1 or more if METFM=0 or 2 (multiple CALMET files or 2DMET files)

    Number of meteorological data file time-periods (NMET)
                         Default: 0      ! NMET    = 0   !


 All filenames will be converted to lower case if LCFILES = T
 Otherwise, if LCFILES = F, filenames will be converted to UPPER CASE

    Convert filenames to lower case?  Default: T     ! LCFILES = T !
```

```
      T = lower case
      F = UPPER CASE

!END!

------------------------------------------------------------
 NOTE: file/path names can be up to 70 characters in length
------------------------------------------------------------

-------------
Subgroup (0b)
-------------

NMET CALMET Data Files (METFM=0):

Input File    Default File Name
----------    -----------------
  1           MET.DAT          * UTLMET =CALMET.DAT  * *END*

NMET 1-D Data Files (METFM=1):

Input File    Default File Name
----------    -----------------
  1           MET_1D.DAT       * MET1D  = MET_1D.DAT * *END*

NMET 2-D Data Files of Each Type (METFM=2):

Input File    Default File Name
----------    -----------------
  1           RHUMD.DAT        * M2DRHU  = RELHUM.DAT * *END*
  1           TEMP.DAT         * M2DTMP  = TEMP.DAT   * *END*
  1           RHOAIR.DAT       * M2DRHO  = RHOAIR.DAT * *END*

NFILES CALPUFF Data Files:

Input File    Default File Name
----------    -----------------
  1           CALPUFF.DAT      ! MODDAT =..\PUFFMAX.CON  ! !END!

-------------
Note:  provide NMET lines of the form   * UTLMET = name * *END*

                          or   * MET1D  = name * *END*

                          or   * M2DRHU = name * *END*
                        (and)  * M2DTMP = name * *END*
                        (and)  * M2DRHO = name * *END*

     and NFILES lines of the form     * MODDAT = name * *END*

     where the * should be replaced with an exclamation point,
     the special delimiter character.


-------------------------------------------------------------------------------

INPUT GROUP: 1 -- General run control parameters
-------------

    Starting date:   Year  (ISYR) --   No default   ! ISYR  =  2001 !
                     Month (ISMO) --   No default   ! ISMO  = 1   !
                     Day   (ISDY) --   No default   ! ISDY  = 1   !
                     Hour  (ISHR) --   No default   ! ISHR  = 1   !

    Number of periods to process
                     (NPER) -- No default   ! NPER  = 8760 !

    Number of species to process from CALPUFF runs
                     (NSPECINP) -- No default   ! NSPECINP = 6 !

    Number of species to write to output file
                     (NSPECOUT) -- No default   ! NSPECOUT = 9 !

    Number of species to compute from those modeled
    (must be no greater than NSPECOUT)
```

(NSPECCMP) -- No default ! NSPECCMP = 4 !

When multiple files are used, a species name may appear in more than one file. Data for this species will be summed (appropriate if the CALPUFF runs use different source groups). If this summing is not appropriate, remove duplicate species from the file(s).

Stop run if duplicate species names
are found? (MDUPLCT) Default: 0 ! MDUPLCT = 0 !
0 = no (i.e., duplicate species are summed)
1 = yes (i.e., run is halted)

Data for each species in a CALPUFF data file may also be scaled as they are read. This can be done to alter the emission rate of all sources that were modeled in a particular CALPUFF application. The scaling factor for each species is entered in Subgroup (2d), for each file for which scaling is requested.

Number of CALPUFF data files that will be scaled
(must be no greater than NFILES)
(NSCALED) Default: 0 ! NSCALED = 0 !

Ammonia-Limiting Method Option to recompute the HNO3/NO3 concentration partition prior to performing other actions is controlled by MNITRATE. This option will NOT alter any deposition fluxes contained in the CALPUFF file(s). Three partition selections are provided. The first two are typically used in sequence (POSTUTIL is run more than once). The first selection (MNITRATE=1) computes the partition for the TOTAL (all sources) concentration fields (SO4, NO3, HNO3; NH3), and the second (MNITRATE=2) uses this partition (from the previous application of POSTUTIL) to compute the partition for individual source groups. The third selection (MNITRATE=3) can be used instead in a single POSTUTIL application if a file of background concentrations is provided (BCKGALM in Input Group 0).

Required information for MNITRATE=1 includes:
species NO3, HNO3, and SO4
NH3 concentration(s)
met. data file for RH and T

Required information for MNITRATE=2 includes:
species NO3 and HNO3 for a source group
species NO3ALL and HNO3ALL for all source groups, properly partitioned

Required information for MNITRATE=3 includes:
species NO3, HNO3, and SO4 for a source group
species NO3, HNO3, SO4 and TNH3 from the background BCKGALM file
If TNH3 is not in the background BCKGALM file, monthly TNH3 concentrations are used (BCKTNH3)

Recompute the HNO3/NO3 partition for concentrations?
(MNITRATE) Default: 0 ! MNITRATE = 0 !
0 = no
1 = yes, for all sources combined
2 = yes, for a source group
3 = yes, ALM application in one step

SOURCE OF AMMONIA:

Ammonia may be available as a modeled species in the CALPUFF files, and it may or may not be appropriate to use it for repartitioning NO3/HNO3 (in option MNITRATE=1 or MNITRATE=3). Its use is contolled by NH3TYP. When NH3 is listed as a processed species in Subgroup (2a), as one of the NSPECINP ASPECI entries, and the right option is chosen for NH3TYP, the NH3 modeled values from the CALPUFF concentration files will be used in the chemical equilibrium calculation.

NH3TYP also controls when monthly background ammonia values are used. Both gaseous (NH3) and total (TNH3) ammonia can be provided monthly as BCKNH3/BCKTNH3.

What is the input source of Ammonia?
(NH3TYP) No Default ! NH3TYP = 0 !
0 = No background will be used.
ONLY NH3 from the concentration
files listed in Subgroup (2a) as

a processed species will be used.
(Cannot be used with MNITRATE=3)

1 = NH3 Monthly averaged background (BCKNH3)
listed below will be added to NH3 from
concentration files listed in Subgroup (2a)

2 = NH3 from background concentration file BCKGALM
will be added to NH3 from concentration files
listed in Subgroup (2a)
(ONLY possible for MNITRATE=3)

3 = NH3 Monthly averaged background (BCKNH3)
listed below will be used alone.

4 = NH3 from background concentration file BCKGALM
will be used alone
(ONLY possible for MNITRATE=3)

NH3TYP	NH3 CONC	NH3 FROM BCKNH3	NH3 FROM BCKGALM
0	X	0	0
1	X	X	0
2	X	0	X
3	0	X	0
4	0	0	X

Default monthly (12 values) background ammonia concentration (ppb)
used for HNO3/NO3 partition:

Gaseous NH3 (BCKNH3) Default: -999
! BCKNH3 = 1., 1., 1., 1.1, 1.4, 1.3, 1.3, 1.2, 4*1. !

Total TNH3 (BCKTNH3) Default: -999
* BCKTNH3 = 1., 1., 1., 1.1, 1.4, 1.3, 1.3, 1.2, 4*1. *

If a single value is entered, this is used for all 12 months.
Month 1 is JANUARY, Month 12 is DECEMBER.

!END!

INPUT GROUP: 2 -- Species Processing Information

Subgroup (2a)

The following NSPECINP species will be processed:

! ASPECI = SO2 ! !END!
! ASPECI = SO4 ! !END!
! ASPECI = NOX ! !END!
! ASPECI = HNO3 ! !END!
! ASPECI = NO3 ! !END!
! ASPECI = PM10 ! !END!

Subgroup (2b)

The following NSPECOUT species will be written:

! ASPECO = SO2 ! !END!
! ASPECO = SO4 ! !END!
! ASPECO = NOX ! !END!
! ASPECO = HNO3 ! !END!
! ASPECO = NO3 ! !END!
! ASPECO = SOA ! !END!
! ASPECO = EC ! !END!
! ASPECO = SOIL ! !END!

```
! ASPECO =        PMC !        !END!

--------------
Subgroup (2c)
--------------

 The following NSPECCMP species will be computed by scaling and summing
 one or more of the processed input species.  Identify the name(s) of
 the computed species and provide the scaling factors for each of the
 NSPECINP input species (NSPECCMP groups of NSPECINP+1 lines each):

NOTE: SO4 IS INPUT TO CALPUFF EXPLICITLY

! CSPECCMP =    SOA !
!    SO2  =    0.0 !
!    SO4  =    0.0 !
!    NOX  =    0.0 !
!   HNO3  =    0.0 !
!    NO3  =    0.0 !
!   PM10  =    1.0 !
!END!

! CSPECCMP =     EC !
!    SO2  =    0.0 !
!    SO4  =    0.0 !
!    NOX  =    0.0 !
!   HNO3  =    0.0 !
!    NO3  =    0.0 !
!   PM10  =    0.0 !
!END!

! CSPECCMP =   SOIL !
!    SO2  =    0.0 !
!    SO4  =    0.0 !
!    NOX  =    0.0 !
!   HNO3  =    0.0 !
!    NO3  =    0.0 !
!   PM10  =    0.0 !
!END!

! CSPECCMP =    PMC !
!    SO2  =    0.0 !
!    SO4  =    0.0 !
!    NOX  =    0.0 !
!   HNO3  =    0.0 !
!    NO3  =    0.0 !
!   PM10  =    0.0 !
!END!

--------------
Subgroup (2d)
--------------

 Each species in NSCALED CALPUFF data files may be scaled before being
 processed (e.g., to change the emission rate for all sources modeled
 in the run that produced a data file).  For each file, identify the
 file name and then provide the name(s) of the scaled species and the
 corresponding scaling factors (A,B where x' = Ax+B).

          A(Default=1.0)     B(Default=0.0)
          --------------     --------------

!END!
```

POSTUTIL INPUT FOR VISIBILITY STEP 2

```
SITHE-GLOBAL LIVE OAKS, POSTUTIL FOR VISIBILITY IMPACTS   10/8/08
POSTUTIL STEP 2 FOR HNO3/NO3 PARTITIONING
4-km FLORIDA DOMAIN, 2001, IMPACTS AT OKEFENOKEE NWAS
CLASS I RECEPTORS AT ENP - 4-km FL DOMAIN, 2001

---------------- Run title (3 lines) ----------------------------------------

                POSTUTIL MODEL CONTROL FILE
                ---------------------------

-------------------------------------------------------------------------------

INPUT GROUP: 0 -- Input and Output File Names
---------------

-------------
Subgroup (0a)
-------------

Output Files
------------

 File          Default File Name
 ----         -----------------
 List File     POSTUTIL.LST      ! UTLLST =PUTVIS2.LST   !
 Data File      MODEL.DAT        ! UTLDAT =PUTVIS2.CON   !


Input Files
-----------

 A time-varying file of "background" concentrations can be included
 when the ammonia-limiting method (ALM) for setting the HNO3/NO3
 concentration partition is accomplished in 1 step.  This option
 is selected by setting MNITRATE=3 in Input Group 1.
 Species required in the "background" concentration file are:
 SO4, NO3, HNO3 and TNH3 (total NH3).

 File          Default File Name
 ----         -----------------
 BCKG File      BCKGALM.DAT        * BCKGALM =BCKGALM.DAT    *


 A number of CALPUFF data files may be processed in this application.
 The files may represent individual CALPUFF simulations that were made
 for a specific set of species and/or sources.  Specify the total number
 of CALPUFF runs you wish to combine, and provide the filename for each
 in subgroup 0b.

    Number of CALPUFF data files (NFILES)
                         Default: 1       ! NFILES  = 1   !


 Meteorological data files are needed for the HNO3/NO3 partition option.
 Three types of meteorological data files can be used:
     METFM= 0 - CALMET.DAT
     METFM= 1 - 1-D file with RH, Temp and Rhoair timeseries
     METFM= 2 - 2-D files with either Rh, Temp or Rhoair in each
            (3 2_D files are needed)
    The default is to use CALMET.DAT files.

                         Default: 0       ! METFM   = 0   !


 Multiple meteorological data files may be used in sequence to span the
 processing period.  Specify the number of time-period files (NMET) that
 you need to use, and provide a filename for each in subgroup 0b.
 - NMET is 0 if no meteorological files are provided
 - NMET is 1 if METFM=1 (multiple file feature is not available)
 - NMET is 1 or more if METFM=0 or 2 (multiple CALMET files or 2DMET files)

    Number of meteorological data file time-periods (NMET)
                         Default: 0       ! NMET    = 12   !


 All filenames will be converted to lower case if LCFILES = T
 Otherwise, if LCFILES = F, filenames will be converted to UPPER CASE
```

```
   Convert filenames to lower case?  Default: T     ! LCFILES = T !
      T = lower case
      F = UPPER CASE

!END!

------------------------------------------------------------
 NOTE: file/path names can be up to 70 characters in length
------------------------------------------------------------

--------------
Subgroup (0b)
--------------

NMET CALMET Data Files (METFM=0):

Input File     Default File Name
----------     -----------------
  1            MET.DAT          ! UTLMET =d:\2001-DOM2EPA\met2001-dom2-JAN.dat  ! !END!
  1            MET.DAT          ! UTLMET =d:\2001-DOM2EPA\met2001-dom2-FEB.dat  ! !END!
  1            MET.DAT          ! UTLMET =d:\2001-DOM2EPA\met2001-dom2-MAR.dat  ! !END!
  1            MET.DAT          ! UTLMET =d:\2001-DOM2EPA\met2001-dom2-APR.dat  ! !END!
  1            MET.DAT          ! UTLMET =d:\2001-DOM2EPA\met2001-dom2-MAY.dat  ! !END!
  1            MET.DAT          ! UTLMET =d:\2001-DOM2EPA\met2001-dom2-JUN.dat  ! !END!
  1            MET.DAT          ! UTLMET =d:\2001-DOM2EPA\met2001-dom2-JUL.dat  ! !END!
  1            MET.DAT          ! UTLMET =d:\2001-DOM2EPA\met2001-dom2-AUG.dat  ! !END!
  1            MET.DAT          ! UTLMET =d:\2001-DOM2EPA\met2001-dom2-SEP.dat  ! !END!
  1            MET.DAT          ! UTLMET =d:\2001-DOM2EPA\met2001-dom2-OCT.dat  ! !END!
  1            MET.DAT          ! UTLMET =d:\2001-DOM2EPA\met2001-dom2-NOV.dat  ! !END!
  1            MET.DAT          ! UTLMET =d:\2001-DOM2EPA\met2001-dom2-DEC.dat  ! !END!

NMET 1-D Data Files (METFM=1):

Input File     Default File Name
----------     -----------------
  1            MET_1D.DAT        * MET1D  = MET_1D.DAT * *END*

NMET 2-D Data Files of Each Type (METFM=2):

Input File     Default File Name
----------     -----------------
  1            RHUMD.DAT         * M2DRHU  = RELHUM.DAT * *END*
  1            TEMP.DAT         * M2DTMP  = TEMP.DAT   * *END*
  1            RHOAIR.DAT        * M2DRHO  = RHOAIR.DAT * *END*

NFILES CALPUFF Data Files:

Input File     Default File Name
----------     -----------------
  1            CALPUFF.DAT       ! MODDAT = PUTVIS.CON  ! !END!

--------------
Note:  provide NMET lines of the form   * UTLMET = name * *END*

                          or   * MET1D  = name * *END*

                          or   * M2DRHU = name * *END*
                        (and)  * M2DTMP = name * *END*
                        (and)  * M2DRHO = name * *END*

     and NFILES lines of the form     * MODDAT = name * *END*

     where the * should be replaced with an exclamation point,
     the special delimiter character.

-------------------------------------------------------------------------------

INPUT GROUP: 1 -- General run control parameters
--------------

    Starting date:   Year  (ISYR) --   No default   ! ISYR  =  2001 !
                     Month (ISMO) --   No default   ! ISMO  = 1   !
                     Day   (ISDY) --   No default   ! ISDY  = 1   !
                     Hour  (ISHR) --   No default   ! ISHR  = 1   !
```

Number of periods to process
(NPER) -- No default ! NPER = 8760 !

Number of species to process from CALPUFF runs
(NSPECINP) -- No default ! NSPECINP = 9 !

Number of species to write to output file
(NSPECOUT) -- No default ! NSPECOUT = 9 !

Number of species to compute from those modeled
(must be no greater than NSPECOUT)
(NSPECCMP) -- No default ! NSPECCMP = 0 !

When multiple files are used, a species name may appear in more than one file. Data for this species will be summed (appropriate if the CALPUFF runs use different source groups). If this summing is not appropriate, remove duplicate species from the file(s).

Stop run if duplicate species names
are found? (MDUPLCT) Default: 0 ! MDUPLCT = 0 !
0 = no (i.e., duplicate species are summed)
1 = yes (i.e., run is halted)

Data for each species in a CALPUFF data file may also be scaled as they are read. This can be done to alter the emission rate of all sources that were modeled in a particular CALPUFF application. The scaling factor for each species is entered in Subgroup (2d), for each file for which scaling is requested.

Number of CALPUFF data files that will be scaled
(must be no greater than NFILES)
(NSCALED) Default: 0 ! NSCALED = 0 !

Ammonia-Limiting Method Option to recompute the HNO3/NO3 concentration partition prior to performing other actions is controlled by MNITRATE. This option will NOT alter any deposition fluxes contained in the CALPUFF file(s). Three partition selections are provided. The first two are typically used in sequence (POSTUTIL is run more than once). The first selection (MNITRATE=1) computes the partition for the TOTAL (all sources) concentration fields (SO4, NO3, HNO3; NH3), and the second (MNITRATE=2) uses this partition (from the previous application of POSTUTIL) to compute the partition for individual source groups. The third selection (MNITRATE=3) can be used instead in a single POSTUTIL application if a file of background concentrations is provided (BCKGALM in Input Group 0).

Required information for MNITRATE=1 includes:
species NO3, HNO3, and SO4
NH3 concentration(s)
met. data file for RH and T

Required information for MNITRATE=2 includes:
species NO3 and HNO3 for a source group
species NO3ALL and HNO3ALL for all source groups, properly partitioned

Required information for MNITRATE=3 includes:
species NO3, HNO3, and SO4 for a source group
species NO3, HNO3, SO4 and TNH3 from the background BCKGALM file
If TNH3 is not in the background BCKGALM file, monthly TNH3 concentrations are used (BCKTNH3)

Recompute the HNO3/NO3 partition for concentrations?
(MNITRATE) Default: 0 ! MNITRATE = 1 !
0 = no
1 = yes, for all sources combined
2 = yes, for a source group
3 = yes, ALM application in one step

SOURCE OF AMMONIA:

Ammonia may be available as a modeled species in the CALPUFF files, and it may or may not be appropriate to use it for repartitioning NO3/HNO3 (in option MNITRATE=1 or MNITRATE=3). Its use is contolled by NH3TYP. When NH3 is listed as a processed species in Subgroup (2a), as one of the NSPECINP ASPECI entries, and the right option is chosen for NH3TYP,

the NH3 modeled values from the CALPUFF concentration files will be used in the chemical equilibrium calculation.

NH3TYP also controls when monthly background ammonia values are used. Both gaseous (NH3) and total (TNH3) ammonia can be provided monthly as BCKNH3/BCKTNH3.

What is the input source of Ammonia?
(NH3TYP) No Default ! NH3TYP = 3 !

0 = No background will be used.
ONLY NH3 from the concentration files listed in Subgroup (2a) as a processed species will be used.
(Cannot be used with MNITRATE=3)

1 = NH3 Monthly averaged background (BCKNH3) listed below will be added to NH3 from concentration files listed in Subgroup (2a)

2 = NH3 from background concentration file BCKGALM will be added to NH3 from concentration files listed in Subgroup (2a)
(ONLY possible for MNITRATE=3)

3 = NH3 Monthly averaged background (BCKNH3) listed below will be used alone.

4 = NH3 from background concentration file BCKGALM will be used alone
(ONLY possible for MNITRATE=3)

NH3TYP	NH3 CONC	NH3 FROM BCKNH3	NH3 FROM BCKGALM
0	X	0	0
1	X	X	0
2	X	0	X
3	0	X	0
4	0	0	X

Default monthly (12 values) background ammonia concentration (ppb) used for HNO3/NO3 partition:

Gaseous NH3 (BCKNH3) Default: -999
! BCKNH3 = 12*0.5 !

Total TNH3 (BCKTNH3) Default: -999
* BCKTNH3 = 1., 1., 1., 1.1, 1.4, 1.3, 1.3, 1.2, 4*1. *

If a single value is entered, this is used for all 12 months.
Month 1 is JANUARY, Month 12 is DECEMBER.

!END!

INPUT GROUP: 2 -- Species Processing Information

Subgroup (2a)

The following NSPECINP species will be processed:

! ASPECI = SO2 ! !END!
! ASPECI = SO4 ! !END!
! ASPECI = NOX ! !END!
! ASPECI = HNO3 ! !END!
! ASPECI = NO3 ! !END!
! ASPECI = SOA ! !END!
! ASPECI = EC ! !END!
! ASPECI = SOIL ! !END!
! ASPECI = PMC ! !END!

Subgroup (2b)

The following NSPECOUT species will be written:

```
! ASPECO =      SO2 !      !END!
! ASPECO =      SO4 !      !END!
! ASPECO =      NOX !      !END!
! ASPECO =     HNO3 !      !END!
! ASPECO =      NO3 !      !END!
! ASPECO =      SOA !      !END!
! ASPECO =       EC !      !END!
! ASPECO =     SOIL !      !END!
! ASPECO =      PMC !      !END!
```

Subgroup (2c)

The following NSPECCMP species will be computed by scaling and summing one or more of the processed input species. Identify the name(s) of the computed species and provide the scaling factors for each of the NSPECINP input species (NSPECCMP groups of NSPECINP+1 lines each):

Subgroup (2d)

Each species in NSCALED CALPUFF data files may be scaled before being processed (e.g., to change the emission rate for all sources modeled in the run that produced a data file). For each file, identify the file name and then provide the name(s) of the scaled species and the corresponding scaling factors (A,B where x' = Ax+B).

```
A(Default=1.0)     B(Default=0.0)
--------------     --------------
```

!END!

CALPOST INPUT FOR TOTAL N DEPOSITION

```
SITHE-GLOBAL LIVE OAKS, CALPOST FOR N DEPOSITION          10/8/08
2 CTS ON NATURAL GAS + HEATER
4-km FLORIDA DOMAIN, 2001, IMPACTS AT WOLF ISLAND NWA
---------------- Run title (3 lines) ----------------------------------------

                CALPOST MODEL CONTROL FILE
                --------------------------

-------------------------------------------------------------------------------

INPUT GROUP: 0 -- Input and Output File Names
--------------

Input Files
-----------

File                    Default File Name
----                    -----------------
Conc/Dep Flux File      MODEL.DAT        ! MODDAT =..\PUTDEP.DEP  !
Relative Humidity File  VISB.DAT        * VISDAT =              *
Background Data File     BACK.DAT        *BACKDAT =  *
Transmissometer/        VSRN.DAT        *VSRDAT =  *
Nephelometer Data File

Output Files
------------

File                    Default File Name
----                    -----------------
List File               CALPOST.LST      ! PSTLST =PSNDEPWI.LST  !

Pathname for Timeseries Files  (blank)     * TSPATH =  *
(activate with exclamation points only if
providing NON-BLANK character string)

Pathname for Plot Files  (blank)          * PLPATH =  *
(activate with exclamation points only if
 providing NON-BLANK character string)

User Character String (U) to augment default filenames
(activate with exclamation points only if
 providing NON-BLANK character string)

Timeseries              TSttUUUU.DAT      * TSUNAM =  *

Top Nth Rank Plot       RttUUUUU.DAT
                 or  RttiiUUU.GRD      * TUNAM =  *

Exceedance Plot         XttUUUUU.DAT
                 or  XttUUUUU.GRD      * XUNAM =  *

Echo Plot               jjjtthhU.DAT
(Specific Days)      or  jjjtthhU.GRD      * EUNAM =  *

Visibility Plot         V24UUUUU.DAT      * VUNAM =  *
(Daily Peak Summary)

-------------------------------------------------------------------------------
All file names will be converted to lower case if LCFILES = T
Otherwise, if LCFILES = F, file names will be converted to UPPER CASE
      T = lower case      ! LCFILES = T !
      F = UPPER CASE
NOTE: (1) file/path names can be up to 70 characters in length
NOTE: (2) Filenames for ALL PLOT and TIMESERIES FILES are constructed
       using a template that includes a pathname, user-supplied
       character(s), and fixed strings (tt,ii,jjj, and hh), where
           tt = Averaging Period (e.g. 03)
           ii = Rank (e.g. 02)
           jjj= Julian Day
           hh = Hour(ending)
       are determined internally based on selections made below.
       If a path or user-supplied character(s) are supplied, each
       must contain at least 1 non-blank character.

!END!
-------------------------------------------------------------------------------

INPUT GROUP: 1 -- General run control parameters
---------------
```

```
   Option to run all periods found
   in the met. file(s)  (METRUN)      Default: 0   ! METRUN =   0  !

      METRUN = 0 - Run period explicitly defined below
      METRUN = 1 - Run all periods in CALPUFF data file(s)

   Starting date:   Year  (ISYR) --    No default   ! ISYR  =  2001   !
   (used only if    Month (ISMO) --    No default   ! ISMO  =  1   !
    METRUN = 0)     Day   (ISDY) --    No default   ! ISDY  =  1   !
                    Hour  (ISHR) --    No default   ! ISHR  =  1   !

   Number of hours to process (NHRS) -- No default   ! NHRS  =  8760  !

   Process every hour of data?(NREP) -- Default: 1   ! NREP  =  1  !
    (1 = every hour processed,
     2 = every 2nd hour processed,
     5 = every 5th hour processed, etc.)

Species & Concentration/Deposition Information
----------------------------------------------

    Species to process (ASPEC)       -- No default   ! ASPEC = N !
    (ASPEC = VISIB for visibility processing)

    Layer/deposition code (ILAYER)   -- Default: 1   ! ILAYER = -3 !
     '1'  for CALPUFF concentrations,
     '-1' for dry deposition fluxes,
     '-2' for wet deposition fluxes,
     '-3' for wet+dry deposition fluxes.

    Scaling factors of the form:     -- Defaults:   ! A =  0.0   !
        X(new) = X(old) * A + B        A = 0.0   ! B =  0.0   !
     (NOT applied if A = B = 0.0)      B = 0.0

    Add Hourly Background Concentrations/Fluxes?
                     (LBACK)  -- Default: F   ! LBACK =  F !

Receptor information
--------------------

  Gridded receptors processed?   (LG) -- Default: F   ! LG  = F  !
  Discrete receptors processed?  (LD) -- Default: F   ! LD  = T  !
  CTSG Complex terrain receptors processed?
                        (LCT) -- Default: F   ! LCT = F  !

--Report results by DISCRETE receptor RING?
  (only used when LD = T)     (LDRING) -- Default: F   ! LDRING = F  !

--Select range of DISCRETE receptors (only used when LD = T):

  Select ALL DISCRETE receptors by setting NDRECP flag to -1;
                     OR
  Select SPECIFIC DISCRETE receptors by entering a flag (0,1) for each
    0 = discrete receptor not processed
    1 = discrete receptor processed
  using repeated value notation to select blocks of receptors:
    23*1, 15*0, 12*1
  Flag for all receptors after the last one assigned is set to 0
  (NDRECP) -- Default: -1

  * NDRECP = -1 *
          WI   OKEF
  ! NDRECP = 30*1, 500*0 !


--Select range of GRIDDED receptors (only used when LG = T):

     X index of LL corner (IBGRID) -- Default: -1     ! IBGRID = -1  !
        (-1 OR 1 <= IBGRID <= NX)

     Y index of LL corner (JBGRID) -- Default: -1     ! JBGRID = -1  !
        (-1 OR 1 <= JBGRID <= NY)

     X index of UR corner (IEGRID) -- Default: -1     ! IEGRID = -1  !
        (-1 OR 1 <= IEGRID <= NX)

     Y index of UR corner (JEGRID) -- Default: -1     ! JEGRID = -1  !
        (-1 OR 1 <= JEGRID <= NY)
```

```
  Note: Entire grid is processed if IBGRID=JBGRID=IEGRID=JEGRID=-1


--Specific gridded receptors can also be excluded from CALPOST
  processing by filling a processing grid array with 0s and 1s.  If the
  processing flag for receptor index (i,j) is 1 (ON), that receptor
  will be processed if it lies within the range delineated by IBGRID,
  JBGRID,IEGRID,JEGRID and if LG=T. If it is 0 (OFF), it will not be
  processed in the run.  By default, all array values are set to 1 (ON).

  Number of gridded receptor rows provided in Subgroup (1a) to
  identify specific gridded receptors to process
                    (NGONOFF) -- Default: 0     ! NGONOFF =  0  !   .

!END!


--------------
Subgroup (1a) -- Specific gridded receptors included/excluded
--------------

    Specific gridded receptors are excluded from CALPOST processing
    by filling a processing grid array with 0s and 1s.  A total of
    NGONOFF lines are read here.  Each line corresponds to one 'row'
    in the sampling grid, starting with the NORTHERNMOST row that
    contains receptors that you wish to exclude, and finishing with
    row 1 to the SOUTH (no intervening rows may be skipped).  Within
    a row, each receptor position is assigned either a 0 or 1,
    starting with the westernmost receptor.
      0 = gridded receptor not processed
      1 = gridded receptor processed

    Repeated value notation may be used to select blocks of receptors:
      23*1, 15*0, 12*1

    Because all values are initially set to 1, any receptors north of
    the first row entered, or east of the last value provided in a row,
    remain ON.

    (NGXRECP) -- Default: 1


-------------------------------------------------------------------------------

INPUT GROUP: 2 -- Visibility Parameters (ASPEC = VISIB)
--------------

    Maximum relative humidity (%) used in particle growth curve
                    (RHMAX) -- Default: 98   ! RHMAX  = 98.0 !

    Modeled species to be included in computing the light extinction
     Include SULFATE?         (LVSO4) -- Default: T   ! LVSO4  = T  !
     Include NITRATE?         (LVNO3) -- Default: T   ! LVNO3  = T  !
     Include ORGANIC CARBON?  (LVOC)  -- Default: T   ! LVOC   = T  !
     Include COARSE PARTICLES? (LVPMC) -- Default: T   ! LVPMC  = F  !
     Include FINE PARTICLES?  (LVPMF) -- Default: T   ! LVPMF  = T  !
     Include ELEMENTAL CARBON? (LVEC)  -- Default: T   ! LVEC   = T  !

    And, when ranking for TOP-N, TOP-50, and Exceedance tables,
     Include BACKGROUND?      (LVBK)  -- Default: T   ! LVBK   = F  !

    Species name used for particulates in MODEL.DAT file
            COARSE    (SPECPMC) -- Default: PMC ! SPECPMC = PMC !
            FINE      (SPECPMF) -- Default: PMF ! SPECPMF = SOIL !

Extinction Efficiency (1/Mm per ug/m**3)
----------------------------------------
    MODELED particulate species:
          PM  COARSE     (EEPMC) -- Default: 0.6 ! EEPMC  = 0.6 !
          PM  FINE       (EEPMF) -- Default: 1.0 ! EEPMF  = 1.0 !
    BACKGROUND particulate species:
          PM  COARSE    (EEPMCBK) -- Default: 0.6 ! EEPMCBK = 0.6 !
    Other species:
          AMMONIUM SULFATE (EESO4) -- Default: 3.0 ! EESO4  = 3.0 !
          AMMONIUM NITRATE (EENO3) -- Default: 3.0 ! EENO3  = 3.0 !
          ORGANIC CARBON   (EEOC)  -- Default: 4.0 ! EEOC   = 4.0 !
          SOIL             (EESOIL)-- Default: 1.0 ! EESOIL = 1.0 !
          ELEMENTAL CARBON (EEEC)  -- Default: 10. ! EEEC   = 10.0 !
```

```
Background Extinction Computation
---------------------------------

  Method used for background light extinction
                  (MVISBK) -- Default: 6   ! MVISBK =  2  !

    1 =  Supply single light extinction and hygroscopic fraction
       - IWAQM (1993) RH adjustment applied to hygroscopic background
         and modeled sulfate and nitrate
    2 =  Compute extinction from speciated PM measurements (A)
       - Hourly RH adjustment applied to observed and modeled sulfate
         and nitrate
       - RH factor is capped at RHMAX
    3 =  Compute extinction from speciated PM measurements (B)
       - Hourly RH adjustment applied to observed and modeled sulfate
         and nitrate
       - Receptor-hour excluded if RH>RHMAX
       - Receptor-day excluded if fewer than 6 valid receptor-hours
    4 =  Read hourly transmissometer background extinction measurements
       - Hourly RH adjustment applied to modeled sulfate and nitrate
       - Hour excluded if measurement invalid (missing, interference,
         or large RH)
       - Receptor-hour excluded if RH>RHMAX
       - Receptor-day excluded if fewer than 6 valid receptor-hours
    5 =  Read hourly nephelometer background extinction measurements
       - Rayleigh extinction value (BEXTRAY) added to measurement
       - Hourly RH adjustment applied to modeled sulfate and nitrate
       - Hour excluded if measurement invalid (missing, interference,
         or large RH)
       - Receptor-hour excluded if RH>RHMAX
       - Receptor-day excluded if fewer than 6 valid receptor-hours
    6 =  Compute extinction from speciated PM measurements
       - FLAG RH adjustment factor applied to observed and
         modeled sulfate and nitrate

  Additional inputs used for MVISBK = 1:
  --------------------------------------
   Background light extinction (1/Mm)
                  (BEXTBK) -- No default   ! BEXTBK = 0.0 !
   Percentage of particles affected by relative humidity
                  (RHFRAC) -- No default   ! RHFRAC = 0.0 !

  Additional inputs used for MVISBK = 6:
  --------------------------------------
   Extinction coefficients for hygroscopic species (modeled and
   background) are computed using a monthly RH adjustment factor
   in place of an hourly RH factor (VISB.DAT file is NOT needed).
   Enter the 12 monthly factors here (RHFAC).  Month 1 is January.

   (RHFAC)  -- No default     ! RHFAC = 0.0, 0.0, 0.0, 0.0,
                              0.0, 0.0, 0.0, 0.0,
                              0.0, 0.0, 0.0, 0.0 !

  Additional inputs used for MVISBK = 2,3,6:
  ------------------------------------------
   Background extinction coefficients are computed from monthly
   CONCENTRATIONS of ammonium sulfate (BKSO4), ammonium nitrate (BKNO3),
   coarse particulates (BKPMC), organic carbon (BKOC), soil (BKSOIL), and
   elemental carbon (BKEC).  Month 1 is January.
   (ug/m**3)


   (BKSO4)  -- No default     ! BKSO4 = 0.0, 0.0, 0.0, 0.0,
                              0.0, 0.0, 0.0, 0.0,
                              0.0, 0.0, 0.0, 0.0 !
   (BKNO3)  -- No default     ! BKNO3 = 0.0, 0.0, 0.0, 0.0,
                              0.0, 0.0, 0.0, 0.0,
                              0.0, 0.0, 0.0, 0.0 !
   (BKPMC)  -- No default     ! BKPMC = 0.0, 0.0, 0.0, 0.0,
                              0.0, 0.0, 0.0, 0.0,
                              0.0, 0.0, 0.0, 0.0 !
   (BKOC)   -- No default     ! BKOC  = 0.0, 0.0, 0.0, 0.0,
                              0.0, 0.0, 0.0, 0.0,
                              0.0, 0.0, 0.0, 0.0 !
   (BKSOIL) -- No default     ! BKSOIL= 0.0, 0.0, 0.0, 0.0,
                              0.0, 0.0, 0.0, 0.0,
                              0.0, 0.0, 0.0, 0.0 !
   (BKEC)   -- No default     ! BKEC  = 0.0, 0.0, 0.0, 0.0,
```

```
                    0.0, 0.0, 0.0, 0.0,
                    0.0, 0.0, 0.0, 0.0 !

  Additional inputs used for MVISBK = 2,3,5,6:
  ---------------------------------------------
   Extinction due to Rayleigh scattering is added (1/Mm)
              (BEXTRAY) -- Default: 10.0 ! BEXTRAY = 10.0 !

!END!
-------------------------------------------------------------------------------

INPUT GROUP: 3 -- Output options
--------------

Documentation
-------------

  Documentation records contained in the header of the
  CALPUFF output file may be written to the list file.
  Print documentation image?
              (LDOC) -- Default: F  ! LDOC =  F  !

Output Units
------------
  Units for All Output     (IPRTU) -- Default: 1  ! IPRTU =  1  !
            for        for
        Concentration  Deposition
   1 =     g/m**3       g/m**2/s
   2 =    mg/m**3       mg/m**2/s
   3 =    ug/m**3       ug/m**2/s
   4 =    ng/m**3       ng/m**2/s
   5 =   Odour Units

  Visibility: extinction expressed in 1/Mega-meters (IPRTU is ignored)


Averaging time(s) reported
--------------------------

  1-hr averages        (L1HR) -- Default: T  !  L1HR = F  !

  3-hr averages        (L3HR) -- Default: T  !  L3HR = F  !

  24-hr averages       (L24HR) -- Default: T  ! L24HR = F  !

  Run-length averages   (LRUNL) -- Default: T  ! LRUNL = T  !

  User-specified averaging time in hours - results for
  an averaging time of NAVG hours are reported for
  NAVG greater than 0:
              (NAVG) -- Default: 0  !  NAVG =  0  !


Types of tabulations reported
-----------------------------

  1) Visibility: daily visibility tabulations are always reported
          for the selected receptors when ASPEC = VISIB.
          In addition, any of the other tabulations listed
          below may be chosen to characterize the light
          extinction coefficients.
          [List file or Plot/Analysis File]


  2) Top 50 table for each averaging time selected
    [List file only]
              (LT50) -- Default: T  !  LT50 = F  !

  3) Top 'N' table for each averaging time selected
    [List file or Plot file]
              (LTOPN) -- Default: F  ! LTOPN = T  !

     -- Number of 'Top-N' values at each receptor
       selected (NTOP must be <= 4)
              (NTOP) -- Default: 4  ! NTOP =  1  !

     -- Specific ranks of 'Top-N' values reported
       (NTOP values must be entered)
          (ITOP(4) array) -- Default:    ! ITOP =  1  !
```

```
                    1,2,3,4

 4) Threshold exceedance counts for each receptor and each averaging
   time selected
   [List file or Plot file]
              (LEXCD) -- Default: F   !  LEXCD = F  !

    -- Identify the threshold for each averaging time by assigning a
       non-negative value (output units).

                    -- Default: -1.0
       Threshold for  1-hr averages   (THRESH1) !  THRESH1 = -1.0  !
       Threshold for  3-hr averages   (THRESH3) !  THRESH3 = -1.0  !
       Threshold for 24-hr averages  (THRESH24) ! THRESH24 = -1.0  !
       Threshold for NAVG-hr averages (THRESHN) !  THRESHN = -1.0  !


    -- Counts for the shortest averaging period selected can be
       tallied daily, and receptors that experience more than NCOUNT
       counts over any NDAY period will be reported.  This type of
       exceedance violation output is triggered only if NDAY > 0.

       Accumulation period(Days)
              (NDAY) -- Default: 0   !    NDAY =  0  !
       Number of exceedances allowed
             (NCOUNT) -- Default: 1   !  NCOUNT =  1  !


 5) Selected day table(s)

   Echo Option -- Many records are written each averaging period
   selected and output is grouped by day
   [List file or Plot file]
              (LECHO) -- Default: F   !  LECHO = F  !

   Timeseries Option -- Averages at all selected receptors for
   each selected averaging period are written to timeseries files.
   Each file contains one averaging period, and all receptors are
   written to a single record each averaging time.
   [TSttUUUU.DAT files]
              (LTIME) -- Default: F   !  LTIME = F  !

    -- Days selected for output
           (IECHO(366)) -- Default: 366*0
      ! IECHO  = 366*0  !
      (366 values must be entered)

Plot output options
-------------------

   Plot files can be created for the Top-N, Exceedance, and Echo
   tables selected above.  Two formats for these files are available,
   DATA and GRID.  In the DATA format, results at all receptors are
   listed along with the receptor location [x,y,val1,val2,...].
   In the GRID format, results at only gridded receptors are written,
   using a compact representation.  The gridded values are written in
   rows (x varies), starting with the most southern row of the grid.
   The GRID format is given the .GRD extension, and includes headers
   compatible with the SURFER(R) plotting software.

   A plotting and analysis file can also be created for the daily
   peak visibility summary output, in DATA format only.

   Generate Plot file output in addition to writing tables
   to List file?
                 (LPLT) -- Default: F   ! LPLT  = F !

   Use GRID format rather than DATA format,
   when available?
                 (LGRD) -- Default: F   ! LGRD  = F !


Additional Debug Output
-----------------------

  Output selected information to List file
   for debugging?
                 (LDEBUG) -- Default: F  ! LDEBUG  = F !
```

!END!

CALPOST INPUT FOR VISIBILITY METHOD 2

```
SITHE-GLOBAL LIVE OAKS, CALPOST FOR VISIBILITY IMPACTS   10/8/08
2 CTS ON NATURAL GAS + HEATER, METHOD 2
4-km FLORIDA DOMAIN, 2001, IMPACTS AT OKEFENOKEE NWAS
---------------- Run title (3 lines) ----------------------------------------

                CALPOST MODEL CONTROL FILE
                --------------------------

------------------------------------------------------------------------------

INPUT GROUP: 0 -- Input and Output File Names
---------------

Input Files
------------

File                  Default File Name
----                  -----------------
Conc/Dep Flux File       MODEL.DAT        ! MODDAT =..\PUTVIS.CON  !
Relative Humidity File   VISB.DAT        ! VISDAT =..\..\VISB.DAT  !
Background Data File      BACK.DAT         *BACKDAT =  *
Transmissometer or        VSRN.DAT         *VSRDAT =   *
Nephelometer Data File     or
DATSAV Weather Data File   or
Prognostic Weather  File

Output Files
------------

File                  Default File Name
----                  -----------------
List File               CALPOST.LST       ! PSTLST =PSVIS2OK.LST  !

Pathname for Timeseries Files   (blank)      * TSPATH =   *
(activate with exclamation points only if
providing NON-BLANK character string)

Pathname for Plot Files   (blank)          * PLPATH =   *
(activate with exclamation points only if
 providing NON-BLANK character string)

User Character String (U) to augment default filenames
(activate with exclamation points only if
 providing NON-BLANK character string)

Timeseries        TSERIES_ASPEC_ttHR_CONC_TSUNAM.DAT
Peak Value         PEAKVAL_ASPEC_ttHR_CONC_TSUNAM.DAT

                              * TSUNAM =   *

Top Nth Rank Plot   RANK(ALL)_ASPEC_ttHR_CONC_TUNAM.DAT
           or  RANK(ii)_ASPEC_ttHR_CONC_TUNAM.GRD

                              * TUNAM =   *

Exceedance Plot      EXCEED_ASPEC_ttHR_CONC_XUNAM.DAT
           or  EXCEED_ASPEC_ttHR_CONC_XUNAM.GRD

                              * XUNAM =   *

Echo Plot
(Specific Days)
        yyyy_Mmm_Ddd_hh00(UTCszzzz)_L00_ASPEC_ttHR_CONC.DAT
    or   yyyy_Mmm_Ddd_hh00(UTCszzzz)_L00_ASPEC_ttHR_CONC.GRD


Visibility Plot     DAILY_VISIB_VUNAM.DAT   ! VUNAM =VTEST   !
(Daily Peak Summary)


Auxiliary Output Files
----------------------

File                  Default File Name
----                  -----------------
Visibility Change        DELVIS.DAT         ! DVISDAT = deciview.dat  !
```

```
------------------------------------------------------------------------------
All file names will be converted to lower case if LCFILES = T
Otherwise, if LCFILES = F, file names will be converted to UPPER CASE
      T = lower case            ! LCFILES = T !
      F = UPPER CASE
NOTE: (1) file/path names can be up to 132 characters in length
NOTE: (2) Filenames for ALL PLOT and TIMESERIES FILES are constructed
       using a template that includes a pathname, user-supplied
       character(s), and context-specific strings, where
         ASPEC = Species Name
         CONC = CONC Or WFLX Or DFLX Or TFLX
           tt = Averaging Period (e.g. 03)
           ii = Rank (e.g. 02)
           hh = Hour(ending) in LST
        szzzz = LST time zone shift (EST is -0500)
         yyyy = Year(LST)
           mm = Month(LST)
           dd = day of month (LST)
      are determined internally based on selections made below.
      If a path or user-supplied character(s) are supplied, each
      must contain at least 1 non-blank character.

!END!
------------------------------------------------------------------------------

INPUT GROUP: 1 -- General run control parameters
--------------

   Option to run all periods found
   in the met. file(s)  (METRUN)       Default: 0   ! METRUN =  0  !

     METRUN = 0 - Run period explicitly defined below
     METRUN = 1 - Run all periods in CALPUFF data file(s)

   Starting date:   Year  (ISYR) --   No default   ! ISYR  =  2001   !
   (used only if    Month (ISMO) --   No default   ! ISMO  =  1   !
    METRUN = 0)     Day   (ISDY) --   No default   ! ISDY  =  1   !
                    Hour  (ISHR) --   No default   ! ISHR  =  1   !

   Number of hours to process (NHRS) -- No default   ! NHRS  =  8760  !

   Process every hour of data?(NREP) -- Default: 1   ! NREP  =  1  !
    (1 = every hour processed,
     2 = every 2nd hour processed,
     5 = every 5th hour processed, etc.)

Species & Concentration/Deposition Information
----------------------------------------------

   Species to process (ASPEC)      -- No default   ! ASPEC = VISIB !
   (ASPEC = VISIB for visibility processing)

   Layer/deposition code (ILAYER)   -- Default: 1   ! ILAYER = 1 !
    '1'  for CALPUFF concentrations,
    '-1' for dry deposition fluxes,
    '-2' for wet deposition fluxes,
    '-3' for wet+dry deposition fluxes.

   Scaling factors of the form:    -- Defaults:   ! A =  0.0   !
       X(new) = X(old) * A + B        A = 0.0   ! B =  0.0   !
    (NOT applied if A = B = 0.0)      B = 0.0

   Add Hourly Background Concentrations/Fluxes?
                    (LBACK)  -- Default: F   ! LBACK =  F !

Source information
------------------

 Option to process source contributions:
      0 =  Process only total reported contributions
      1 =  Sum all individual source contributions and process
      2 =  Run in TRACEBACK mode to identify source
           contributions at a SINGLE receptor
                    (MSOURCE) -- Default: 0   ! MSOURCE =  0  !

Receptor information
--------------------

 Gridded receptors processed?    (LG) -- Default: F   ! LG  = F  !
```

```
 Discrete receptors processed?  (LD) -- Default: F   ! LD  = T  !
 CTSG Complex terrain receptors processed?
                    (LCT) -- Default: F   ! LCT = F  !

--Report results by DISCRETE receptor RING?
 (only used when LD = T)    (LDRING) -- Default: F   ! LDRING = F  !

--Select range of DISCRETE receptors (only used when LD = T):

 Select ALL DISCRETE receptors by setting NDRECP flag to -1;
                    OR
 Select SPECIFIC DISCRETE receptors by entering a flag (0,1) for each
   0 = discrete receptor not processed
   1 = discrete receptor processed
 using repeated value notation to select blocks of receptors:
   23*1, 15*0, 12*1
 Flag for all receptors after the last one assigned is set to 0
 (NDRECP) -- Default: -1
 * NDRECP = -1 *
         WI   OKEF
 ! NDRECP = 30*0, 500*1 !


--Select range of GRIDDED receptors (only used when LG = T):

     X index of LL corner (IBGRID) -- Default: -1     ! IBGRID = -1  !
       (-1 OR 1 <= IBGRID <= NX)

     Y index of LL corner (JBGRID) -- Default: -1     ! JBGRID = -1  !
       (-1 OR 1 <= JBGRID <= NY)

     X index of UR corner (IEGRID) -- Default: -1     ! IEGRID = -1  !
       (-1 OR 1 <= IEGRID <= NX)

     Y index of UR corner (JEGRID) -- Default: -1     ! JEGRID = -1  !
       (-1 OR 1 <= JEGRID <= NY)

 Note: Entire grid is processed if IBGRID=JBGRID=IEGRID=JEGRID=-1


--Specific gridded receptors can also be excluded from CALPOST
 processing by filling a processing grid array with 0s and 1s.  If the
 processing flag for receptor index (i,j) is 1 (ON), that receptor
 will be processed if it lies within the range delineated by IBGRID,
 JBGRID,IEGRID,JEGRID and if LG=T. If it is 0 (OFF), it will not be
 processed in the run.  By default, all array values are set to 1 (ON).

 Number of gridded receptor rows provided in Subgroup (1a) to
 identify specific gridded receptors to process
                    (NGONOFF) -- Default: 0      ! NGONOFF =  0  !

!END!


---------------
Subgroup (1a) -- Specific gridded receptors included/excluded
---------------

   Specific gridded receptors are excluded from CALPOST processing
   by filling a processing grid array with 0s and 1s.  A total of
   NGONOFF lines are read here.  Each line corresponds to one 'row'
   in the sampling grid, starting with the NORTHERNMOST row that
   contains receptors that you wish to exclude, and finishing with
   row 1 to the SOUTH (no intervening rows may be skipped).  Within
   a row, each receptor position is assigned either a 0 or 1,
   starting with the westernmost receptor.
     0 = gridded receptor not processed
     1 = gridded receptor processed

   Repeated value notation may be used to select blocks of receptors:
     23*1, 15*0, 12*1

   Because all values are initially set to 1, any receptors north of
   the first row entered, or east of the last value provided in a row,
   remain ON.

   (NGXRECP) -- Default: 1
```

```
------------------------------------------------------------------------------

INPUT GROUP: 2 -- Visibility Parameters (ASPEC = VISIB)
--------------

   Identify the Base Time Zone for the CALPUFF simulation
                    (BTZONE) -- No default   ! BTZONE =  5.!

   Particle growth curve f(RH) for hygroscopic species
                     (MFRH) -- Default: 2   ! MFRH   =  3  !

      1 =  IWAQM (1998) f(RH) curve (originally used with MVISBK=1)
      2 =  FLAG (2000) f(RH) tabulation
      3 =  EPA (2003) f(RH) tabulation

   Maximum relative humidity (%) used in particle growth curve
                    (RHMAX) -- Default: 98   ! RHMAX  = 95.0 !

   Modeled species to be included in computing the light extinction
    Include SULFATE?         (LVSO4) -- Default: T   ! LVSO4  = T  !
    Include NITRATE?         (LVNO3) -- Default: T   ! LVNO3  = T  !
    Include ORGANIC CARBON?  (LVOC)  -- Default: T   ! LVOC   = T  !
    Include COARSE PARTICLES? (LVPMC) -- Default: T   ! LVPMC  = T  !
    Include FINE PARTICLES?  (LVPMF) -- Default: T   ! LVPMF  = T  !
    Include ELEMENTAL CARBON? (LVEC)  -- Default: T   ! LVEC   = T  !

   And, when ranking for TOP-N, TOP-50, and Exceedance tables,
    Include BACKGROUND?      (LVBK)  -- Default: T   ! LVBK   = F  !

   Species name used for particulates in MODEL.DAT file
            COARSE    (SPECPMC) -- Default: PMC ! SPECPMC = PMC !
            FINE      (SPECPMF) -- Default: PMF ! SPECPMF = SOIL !

Extinction Efficiency (1/Mm per ug/m**3)
----------------------------------------
   MODELED particulate species:
         PM  COARSE     (EEPMC) -- Default: 0.6 ! EEPMC  = 0.6 !
         PM  FINE       (EEPMF) -- Default: 1.0 ! EEPMF  = 1.0 !
   BACKGROUND particulate species:
         PM  COARSE    (EEPMCBK) -- Default: 0.6 ! EEPMCBK = 0.6 !
   Other species:
         AMMONIUM SULFATE (EESO4) -- Default: 3.0 ! EESO4  = 3.0 !
         AMMONIUM NITRATE (EENO3) -- Default: 3.0 ! EENO3  = 3.0 !
         ORGANIC CARBON   (EEOC)  -- Default: 4.0 ! EEOC   = 4.0 !
         SOIL            (EESOIL)-- Default: 1.0 ! EESOIL = 1.0 !
         ELEMENTAL CARBON (EEEC)  -- Default: 10. ! EEEC   = 10.0 !

Background Extinction Computation
---------------------------------

   Method used for the 24h-average of percent change of light extinction:
   Hourly ratio of source light extinction / background light extinction
   is averaged?             (LAVER) -- Default: F   ! LAVER = F  !


   Method used for background light extinction
                    (MVISBK) -- Default: 2   ! MVISBK =  2  !

      1 =  Supply single light extinction and hygroscopic fraction
         - Hourly F(RH) adjustment applied to hygroscopic background
           and modeled sulfate and nitrate
      2 =  Compute extinction from speciated PM measurements (A)
         - Hourly F(RH) adjustment applied to observed and modeled sulfate
           and nitrate
         - F(RH) factor is capped at F(RHMAX)
      3 =  Compute extinction from speciated PM measurements (B)
         - Hourly F(RH) adjustment applied to observed and modeled sulfate
           and nitrate
         - Receptor-hour excluded if RH>RHMAX
         - Receptor-day excluded if fewer than 6 valid receptor-hours
      4 =  Read hourly transmissometer background extinction measurements
         - Hourly F(RH) adjustment applied to modeled sulfate and nitrate
         - Hour excluded if measurement invalid (missing, interference,
           or large RH)
         - Receptor-hour excluded if RH>RHMAX
         - Receptor-day excluded if fewer than 6 valid receptor-hours
      5 =  Read hourly nephelometer background extinction measurements
         - Rayleigh extinction value (BEXTRAY) added to measurement
         - Hourly F(RH) adjustment applied to modeled sulfate and nitrate
```

- Hour excluded if measurement invalid (missing, interference, or large RH)
- Receptor-hour excluded if RH>RHMAX
- Receptor-day excluded if fewer than 6 valid receptor-hours

6 = Compute extinction from speciated PM measurements
- FLAG monthly RH adjustment factor applied to observed and modeled sulfate and nitrate

7 = Use observed weather or prognostic weather information for background extinction during weather events; otherwise, use Method 2
- Hourly F(RH) adjustment applied to modeled sulfate and nitrate
- F(RH) factor is capped at F(RHMAX)
- During observed weather events, compute Bext from visual range if using an observed weather data file, or
- During prognostic weather events, use Bext from the prognostic weather file
- Use Method 2 for hours without a weather event

Additional inputs used for MVISBK = 1:

Background light extinction (1/Mm)
(BEXTBK) -- No default ! BEXTBK = 0.0 !
Percentage of particles affected by relative humidity
(RHFRAC) -- No default ! RHFRAC = 0.0 !

Additional inputs used for MVISBK = 6:

Extinction coefficients for hygroscopic species (modeled and background) are computed using a monthly RH adjustment factor in place of an hourly RH factor (VISB.DAT file is NOT needed). Enter the 12 monthly factors here (RHFAC). Month 1 is January.

(RHFAC) -- No default ! RHFAC = 3.5, 3.2, 3.1, 3.0,
3.0, 3.5, 3.5, 3.7,
3.7, 3.5, 3.4, 3.6 !

USED MVISBK = 6, DAILY EXTINCTIONS CALCULATED FROM MONTHLY F(RH) FROM TABLE A-2 IN "GUIDANCE FOR ESTIMATING NATURAL VISIBLITY CONDITIONS UNDER THE REGIONAL HAZE RULE (EPA, 2003)".

Additional inputs used for MVISBK = 7:

The weather data file (DATSAV abbreviated space-delimited) that is identified as VSRN.DAT may contain data for more than one station. Identify the stations that are needed in the order in which they will be used to obtain valid weather and visual range. The first station that contains valid data for an hour will be used. Enter up to MXWSTA (set in PARAMS file) integer station IDs of up to 6 digits each as variable IDWSTA, and enter the corresponding time zone for each, as variable TZONE (= UTC-LST).

A prognostic weather data file with Bext for weather events may be used in place of the observed weather file. Identify this as the VSRN.DAT file and use a station ID of IDWSTA = 999999, and TZONE = 0.

NOTE: TZONE identifies the time zone used in the dataset. The DATSAV abbreviated space-delimited data usually are prepared with UTC time rather than local time, so TZONE is typically set to zero.

(IDWSTA) -- No default
! IDWSTA = 690230 ,80020 ,80140 !
(TZONE) -- No default
! TZONE = 0.0 ,0.0 ,0.0 !

Additional inputs used for MVISBK = 2,3,6,7:

Background extinction coefficients are computed from monthly CONCENTRATIONS of ammonium sulfate (BKSO4), ammonium nitrate (BKNO3), coarse particulates (BKPMC), organic carbon (BKOC), soil (BKSOIL), and elemental carbon (BKEC). Month 1 is January.
(ug/m**3)

EXTINCTIONS FOR THE ENP ARE PROVIDED IN THE FLAG DOCUMENT (12/00)
NON-HYGROSCOPIC - 8.5
HYGROSCOPIC - 0.9/3 = 0.3
USED MVISBK = 6, DAILY EXTINCTIONS CALCULATED FROM MONTHLY RH FACTORS PROVIDED

(BKSO4) -- No default ! BKSO4 = 0.3, 0.3, 0.3, 0.3,

```
                                0.3, 0.3, 0.3, 0.3,
                                0.3, 0.3, 0.3, 0.3 !
   (BKNO3)  -- No default    ! BKNO3 = 0.0, 0.0, 0.0, 0.0,
                                0.0, 0.0, 0.0, 0.0,
                                0.0, 0.0, 0.0, 0.0 !
   (BKPMC)  -- No default    ! BKPMC = 0.0, 0.0, 0.0, 0.0,
                                0.0, 0.0, 0.0, 0.0,
                                0.0, 0.0, 0.0, 0.0 !
   (BKOC)   -- No default    ! BKOC  = 0.0, 0.0, 0.0, 0.0,
                                0.0, 0.0, 0.0, 0.0,
                                0.0, 0.0, 0.0, 0.0 !
   (BKSOIL) -- No default    ! BKSOIL= 8.5, 8.5, 8.5, 8.5,
                                8.5, 8.5, 8.5, 8.5,
                                8.5, 8.5, 8.5, 8.5 !
   (BKEC)   -- No default    ! BKEC  = 0.0, 0.0, 0.0, 0.0,
                                0.0, 0.0, 0.0, 0.0,
                                0.0, 0.0, 0.0, 0.0 !

   Additional inputs used for MVISBK = 2,3,5,6,7:
   ----------------------------------------------
    Extinction due to Rayleigh scattering is added (1/Mm)
                    (BEXTRAY) -- Default: 10.0 ! BEXTRAY = 10.0 !

RAYLEIGH SCATTERING TAKEN FROM TABLE A2 OF THE "REVISED IMPROVE ALGORITHM FOR ESTIMATING
LIGHT EXTINCTION FROM PARTICLE SPECIATION DATA".

!END!
-------------------------------------------------------------------------------

INPUT GROUP: 3 -- Output options
--------------

Documentation
-------------

   Documentation records contained in the header of the
   CALPUFF output file may be written to the list file.
   Print documentation image?
                    (LDOC) -- Default: F  !  LDOC =  F  !

Output Units
------------
   Units for All Output      (IPRTU) -- Default: 1   ! IPRTU =  1   !
                for          for
            Concentration   Deposition
     1 =       g/m**3        g/m**2/s
     2 =      mg/m**3        mg/m**2/s
     3 =      ug/m**3        ug/m**2/s
     4 =      ng/m**3        ng/m**2/s
     5 =    Odour Units

   Visibility: extinction expressed in 1/Mega-meters (IPRTU is ignored)


Averaging time(s) reported
--------------------------

   1-hr averages        (L1HR) -- Default: T  !  L1HR = F  !

   3-hr averages        (L3HR) -- Default: T  !  L3HR = F  !

   24-hr averages       (L24HR) -- Default: T  !  L24HR = T  !

   Run-length averages   (LRUNL) -- Default: T  !  LRUNL = F  !

   User-specified averaging time in hours - results for
   an averaging time of NAVG hours are reported for
   NAVG greater than 0:
                   (NAVG) -- Default: 0  !  NAVG =  0  !


Types of tabulations reported
-----------------------------

  1) Visibility: daily visibility tabulations are always reported
            for the selected receptors when ASPEC = VISIB.
            In addition, any of the other tabulations listed
            below may be chosen to characterize the light
            extinction coefficients.
```

[List file or Plot/Analysis File]

2) Top 50 table for each averaging time selected
[List file only]
(LT50) -- Default: T ! LT50 = T !

3) Top 'N' table for each averaging time selected
[List file or Plot file]
(LTOPN) -- Default: F ! LTOPN = F !

-- Number of 'Top-N' values at each receptor
selected (NTOP must be <= 4)
(NTOP) -- Default: 4 ! NTOP = 2 !

-- Specific ranks of 'Top-N' values reported
(NTOP values must be entered)
(ITOP(4) array) -- Default: ! ITOP = 1,2 !
1,2,3,4

4) Threshold exceedance counts for each receptor and each averaging time selected
[List file or Plot file]
(LEXCD) -- Default: F ! LEXCD = F !

-- Identify the threshold for each averaging time by assigning a non-negative value (output units).

-- Default: -1.0
Threshold for 1-hr averages (THRESH1) ! THRESH1 = -1.0 !
Threshold for 3-hr averages (THRESH3) ! THRESH3 = -1.0 !
Threshold for 24-hr averages (THRESH24) ! THRESH24 = -1.0 !
Threshold for NAVG-hr averages (THRESHN) ! THRESHN = -1.0 !

-- Counts for the shortest averaging period selected can be tallied daily, and receptors that experience more than NCOUNT counts over any NDAY period will be reported. This type of exceedance violation output is triggered only if NDAY > 0.

Accumulation period(Days)
(NDAY) -- Default: 0 ! NDAY = 0 !
Number of exceedances allowed
(NCOUNT) -- Default: 1 ! NCOUNT = 1 !

5) Selected day table(s)

Echo Option -- Many records are written each averaging period selected and output is grouped by day
[List file or Plot file]
(LECHO) -- Default: F ! LECHO = F !

Timeseries Option -- Averages at all selected receptors for each selected averaging period are written to timeseries files. Each file contains one averaging period, and all receptors are written to a single record each averaging time.
[TSERIES_ASPEC_ttHR_CONC_TSUNAM.DAT files]
(LTIME) -- Default: F ! LTIME = F !

Peak Value Option -- Averages at all selected receptors for each selected averaging period are screened and the peak value each period is written to timeseries files.
Each file contains one averaging period.
[PEAKVAL_ASPEC_ttHR_CONC_TSUNAM.DAT files]
(LPEAK) -- Default: F ! LPEAK = F !

-- Days selected for output
(IECHO(366)) -- Default: 366*0
! IECHO = 366*0 !
(366 values must be entered)

Plot output options

Plot files can be created for the Top-N, Exceedance, and Echo tables selected above. Two formats for these files are available, DATA and GRID. In the DATA format, results at all receptors are

listed along with the receptor location [x,y,val1,val2,...].
In the GRID format, results at only gridded receptors are written, using a compact representation. The gridded values are written in rows (x varies), starting with the most southern row of the grid. The GRID format is given the .GRD extension, and includes headers compatible with the SURFER(R) plotting software.

A plotting and analysis file can also be created for the daily peak visibility summary output, in DATA format only.

Generate Plot file output in addition to writing tables to List file?
(LPLT) -- Default: F ! LPLT = F !

Use GRID format rather than DATA format, when available?
(LGRD) -- Default: F ! LGRD = F !

Auxiliary Output Files (for subsequent analyses)

Visibility

A separate output file may be requested that contains the change in visibility at each selected receptor when ASPEC = VISIB. This file can be processed to construct visibility measures that are not available in CALPOST.

Output file with the visibility change at each receptor?
(MDVIS) -- Default: 0 ! MDVIS = 0 !

0 = Do Not create file
1 = Create file of DAILY (24 hour) Delta-Deciview
2 = Create file of DAILY (24 hour) Extinction Change (%)
3 = Create file of HOURLY Delta-Deciview
4 = Create file of HOURLY Extinction Change (%)

Additional Debug Output

Output selected information to List file for debugging?
(LDEBUG) -- Default: F ! LDEBUG = F !

Output hourly extinction information to REPORT.HRV? (Visibility Method 7)
(LVEXTHR) -- Default: F ! LVEXTHR = F !

!END!

ATTACHMENT B

ACID RAIN FORM

United States
Environmental Protection Agency
Acid Rain Program

OMB No. 2060-0258

Acid Rain Permit Application

For more information, see instructions and 40 CFR 72.30 and 72.31.

This submission is: ☐ new ☐ revised ☐ for Acid Rain permit renewal

STEP 1

Identify the facility name, State, and plant (ORIS) code.

Live Oaks Company, LLC Facility (Source) Name	Georgia State	Plant Code

STEP 2

Enter the unit ID# for every affected unit at the affected source in column "a."

a	b
Unit ID#	Unit Will Hold Allowances in Accordance with 40 CFR 72.9(c)(1)
CT1	Yes
CT2	Yes
	Yes
	Yes
	Yes
	Yes
	Yes
	Yes
	Yes
	Yes
	Yes
	Yes
	Yes
	Yes
	Yes
	Yes
	Yes
	Yes
	Yes

Facility (Source) Name (from STEP 1)

STEP 3

Read the standard requirements.

Permit Requirements

(1) The designated representative of each affected source and each affected unit at the source shall:

(i) Submit a complete Acid Rain permit application (including a compliance plan) under 40 CFR part 72 in accordance with the deadlines specified in 40 CFR 72.30; and

(ii) Submit in a timely manner any supplemental information that the permitting authority determines is necessary in order to review an Acid Rain permit application and issue or deny an Acid Rain permit;

(2) The owners and operators of each affected source and each affected unit at the source shall:

(i) Operate the unit in compliance with a complete Acid Rain permit application or a superseding Acid Rain permit issued by the permitting authority; and

(ii) Have an Acid Rain Permit.

Monitoring Requirements

(1) The owners and operators and, to the extent applicable, designated representative of each affected source and each affected unit at the source shall comply with the monitoring requirements as provided in 40 CFR part 75.

(2) The emissions measurements recorded and reported in accordance with 40 CFR part 75 shall be used to determine compliance by the source or unit, as appropriate, with the Acid Rain emissions limitations and emissions reduction requirements for sulfur dioxide and nitrogen oxides under the Acid Rain Program.

(3) The requirements of 40 CFR part 75 shall not affect the responsibility of the owners and operators to monitor emissions of other pollutants or other emissions characteristics at the unit under other applicable requirements of the Act and other provisions of the operating permit for the source.

Sulfur Dioxide Requirements

(1) The owners and operators of each source and each affected unit at the source shall:

(i) Hold allowances, as of the allowance transfer deadline, in the source's compliance account (after deductions under 40 CFR 73.34(c)), not less than the total annual emissions of sulfur dioxide for the previous calendar year from the affected units at the source; and

(ii) Comply with the applicable Acid Rain emissions limitations for sulfur dioxide.

(2) Each ton of sulfur dioxide emitted in excess of the Acid Rain emissions limitations for sulfur dioxide shall constitute a separate violation of the Act.

(3) An affected unit shall be subject to the requirements under paragraph (1) of the sulfur dioxide requirements as follows:

(i) Starting January 1, 2000, an affected unit under 40 CFR 72.6(a)(2); or

(ii) Starting on the later of January 1, 2000 or the deadline for monitor certification under 40 CFR part 75, an affected unit under 40 CFR 72.6(a)(3).

Facility (Source) Name (from STEP 1)

Sulfur Dioxide Requirements, Cont'd.

STEP 3, Cont'd.

(4) Allowances shall be held in, deducted from, or transferred among Allowance Tracking System accounts in accordance with the Acid Rain Program.
(5) An allowance shall not be deducted in order to comply with the requirements under paragraph (1) of the sulfur dioxide requirements prior to the calendar year for which the allowance was allocated.
(6) An allowance allocated by the Administrator under the Acid Rain Program is a limited authorization to emit sulfur dioxide in accordance with the Acid Rain Program. No provision of the Acid Rain Program, the Acid Rain permit application, the Acid Rain permit, or an exemption under 40 CFR 72.7 or 72.8 and no provision of law shall be construed to limit the authority of the United States to terminate or limit such authorization.
(7) An allowance allocated by the Administrator under the Acid Rain Program does not constitute a property right.

Nitrogen Oxides Requirements

The owners and operators of the source and each affected unit at the source shall comply with the applicable Acid Rain emissions limitation for nitrogen oxides.

Excess Emissions Requirements

(1) The designated representative of an affected source that has excess emissions in any calendar year shall submit a proposed offset plan, as required under 40 CFR part 77.
(2) The owners and operators of an affected source that has excess emissions in any calendar year shall:
(i) Pay without demand the penalty required, and pay upon demand the interest on that penalty, as required by 40 CFR part 77; and
(ii) Comply with the terms of an approved offset plan, as required by 40 CFR part 77.

Recordkeeping and Reporting Requirements

(1) Unless otherwise provided, the owners and operators of the source and each affected unit at the source shall keep on site at the source each of the following documents for a period of 5 years from the date the document is created. This period may be extended for cause, at any time prior to the end of 5 years, in writing by the Administrator or permitting authority:
(i) The certificate of representation for the designated representative for the source and each affected unit at the source and all documents that demonstrate the truth of the statements in the certificate of representation, in accordance with 40 CFR 72.24; provided that the certificate and documents shall be retained on site at the source beyond such 5-year period until such documents are superseded because of the submission of a new certificate of representation changing the designated representative;

Facility (Source) Name (from STEP 1)

Recordkeeping and Reporting Requirements, Cont'd.

STEP 3, Cont'd.

(ii) All emissions monitoring information, in accordance with 40 CFR part 75, provided that to the extent that 40 CFR part 75 provides for a 3-year period for recordkeeping, the 3-year period shall apply.
(iii) Copies of all reports, compliance certifications, and other submissions and all records made or required under the Acid Rain Program; and,
(iv) Copies of all documents used to complete an Acid Rain permit application and any other submission under the Acid Rain Program or to demonstrate compliance with the requirements of the Acid Rain Program.
(2) The designated representative of an affected source and each affected unit at the source shall submit the reports and compliance certifications required under the Acid Rain Program, including those under 40 CFR part 72 subpart I and 40 CFR part 75.

Liability

(1) Any person who knowingly violates any requirement or prohibition of the Acid Rain Program, a complete Acid Rain permit application, an Acid Rain permit, or an exemption under 40 CFR 72.7 or 72.8, including any requirement for the payment of any penalty owed to the United States, shall be subject to enforcement pursuant to section 113(c) of the Act.
(2) Any person who knowingly makes a false, material statement in any record, submission, or report under the Acid Rain Program shall be subject to criminal enforcement pursuant to section 113(c) of the Act and 18 U.S.C. 1001.
(3) No permit revision shall excuse any violation of the requirements of the Acid Rain Program that occurs prior to the date that the revision takes effect.
(4) Each affected source and each affected unit shall meet the requirements of the Acid Rain Program.
(5) Any provision of the Acid Rain Program that applies to an affected source (including a provision applicable to the designated representative of an affected source) shall also apply to the owners and operators of such source and of the affected units at the source.
(6) Any provision of the Acid Rain Program that applies to an affected unit (including a provision applicable to the designated representative of an affected unit) shall also apply to the owners and operators of such unit.
(7) Each violation of a provision of 40 CFR parts 72, 73, 74, 75, 76, 77, and 78 by an affected source or affected unit, or by an owner or operator or designated representative of such source or unit, shall be a separate violation of the Act.

Effect on Other Authorities

No provision of the Acid Rain Program, an Acid Rain permit application, an Acid Rain permit, or an exemption under 40 CFR 72.7 or 72.8 shall be construed as:
(1) Except as expressly provided in title IV of the Act, exempting or excluding the owners and operators and, to the extent applicable, the designated representative of an affected source or affected unit from compliance with any other provision of the Act, including the provisions of title I of the Act relating

Facility (Source) Name (from STEP 1)

Effect on Other Authorities, Cont'd.

STEP 3, Cont'd.

to applicable National Ambient Air Quality Standards or State Implementation Plans;
(2) Limiting the number of allowances a source can hold; *provided,* that the number of allowances held by the source shall not affect the source's obligation to comply with any other provisions of the Act;
(3) Requiring a change of any kind in any State law regulating electric utility rates and charges, affecting any State law regarding such State regulation, or limiting such State regulation, including any prudence review requirements under such State law;
(4) Modifying the Federal Power Act or affecting the authority of the Federal Energy Regulatory Commission under the Federal Power Act; or,
(5) Interfering with or impairing any program for competitive bidding for power supply in a State in which such program is established.

Certification

STEP 4
Read the certification statement, sign, and date.

I am authorized to make this submission on behalf of the owners and operators of the affected source or affected units for which the submission is made. I certify under penalty of law that I have personally examined, and am familiar with, the statements and information submitted in this document and all its attachments. Based on my inquiry of those individuals with primary responsibility for obtaining the information, I certify that the statements and information are to the best of my knowledge and belief true, accurate, and complete. I am aware that there are significant penalties for submitting false statements and information or omitting required statements and information, including the possibility of fine or imprisonment.

Burt Wallace, Vice President and Manager Name	
Signature	Date 11/18/2008